KIDS SLIDE

Instruction manual

EDS033-2

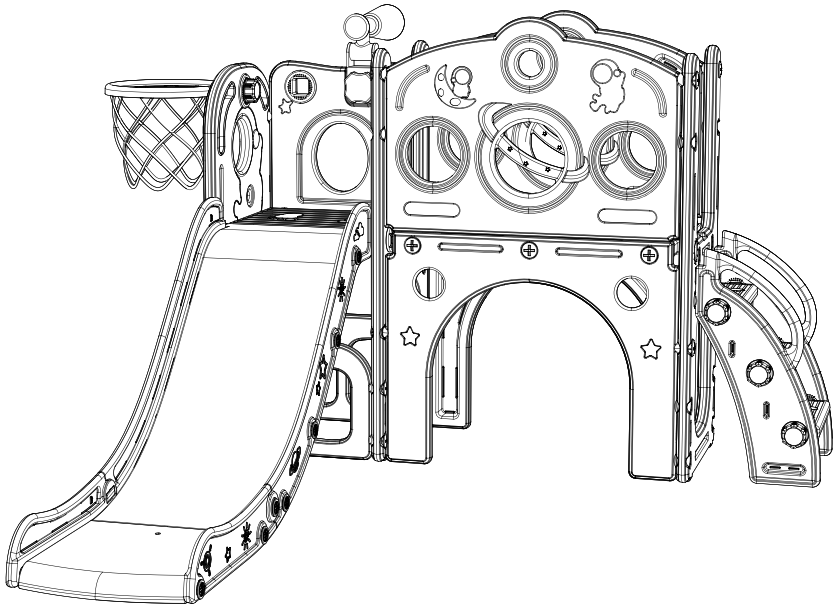

E-mail Service : toddlerslide@gmail.com

This product conforms to the safety requirements of CPSIA, ASTM F963-17

Please read and keep the manual properly, it contains important information.

MAINTENANCE INSTRUCTIONS

1. Check the product regularly to prevent loose and broken components.
2. Use mild soap and water for daily cleaning.
3. The following examines are required at the beginning of each season (twice a month)

(1)Check if any parts are missing or broken.

(2)Check if all the connection parts are tight.

⚠ WARNING

1. CHOKING HAZARD-Small parts. Sharp points.Only for adults assemble it and the product should be used under the supervision of an adult.
2. Children on this product should not wear a scarf, gloves, cloak, or any clothes with long stripes.
3. Children on this product should not wear necklaces or hang anything around the neck.
4. **MAKE SURE** the surface of the product is dry and free of foreign objects before use Stay away from fire.
5. **MAKE SURE** all the connection parts are tightly assembled before allowing children to play on them.
6. **DO NOT** cut, heat, or change the shape of the product.
7. **DO NOT** use a jump rope, clothesline, etc. to hang items not specially designed for this product.
8. **DO NOT** place the product in direct sunlight to reduce the risk of sun-burn.
9. **DO NOT** use the product in an unintended way.
10. **DO NOT** use the product when it is wet or on a snow day.
11. Falling to hard ground like a concrete floor may cause severe injury or even death. Close supervision of an adult is required during use.
12. Stop using the product when the temperature is below 32 ℉ (0 ℃), because the plastic material may get more fragile and easier to break.
13. **DO NOT** leave the toddler slide outdoors exposed to direct sunlight for months. Store it indoors or in a warehouse when not in use.

INFORMATION BEFORE ASSEMBLING

Check if following spare parts are in the box:

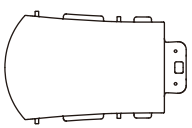

①x1

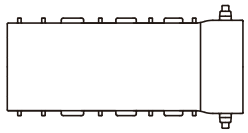

②x1

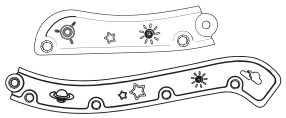

③x2 pair

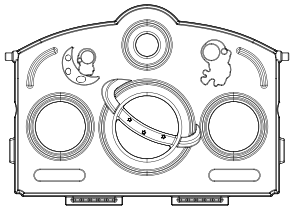

④x2

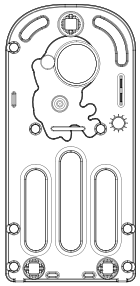

⑤x1

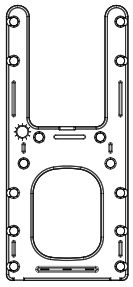

⑥x2

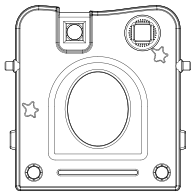

⑦x1

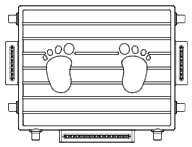

⑧x1

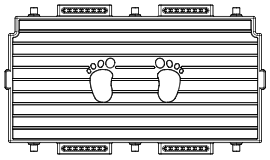

⑨x1

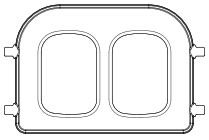

⑩x2

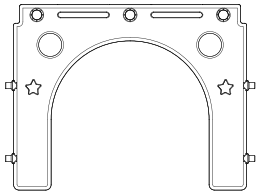

⑪x2

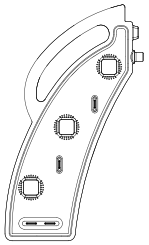

⑫x2

INFORMATION BEFORE ASSEMBLING

Check if following spare parts are in the box:

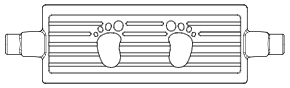

⑬x3

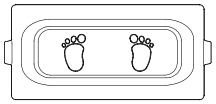

⑭x2

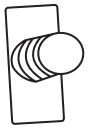

⑮x2



⑯x1

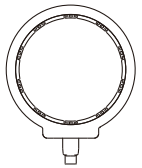

⑰x1



⑱x1



⑲x1

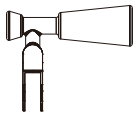

⑳x1



㉑x32



㉒x14

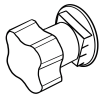

㉓x1



㉔x7



㉕x2

HOW TO ASSEMBLE SCREWS

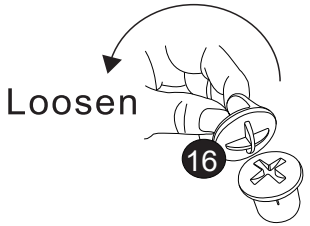

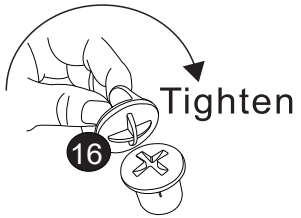

ASSEMBLING

STEP 1

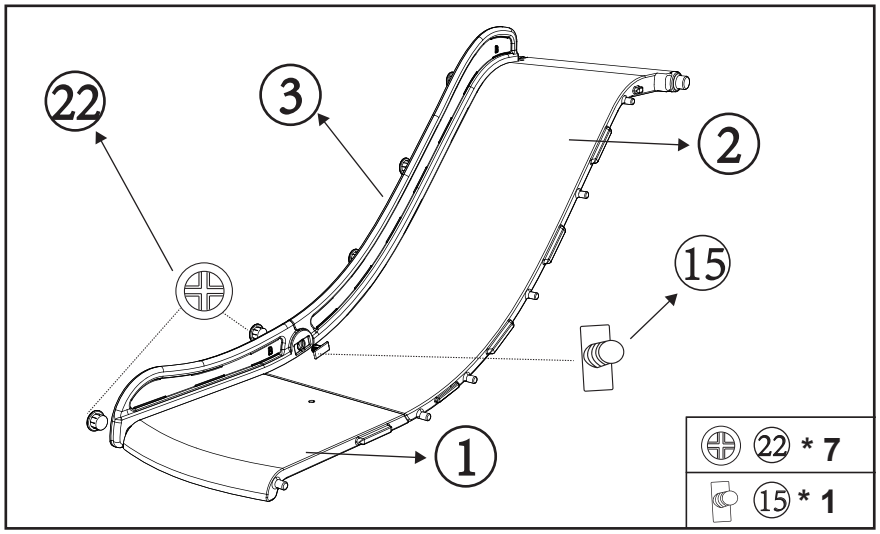

STEP 2

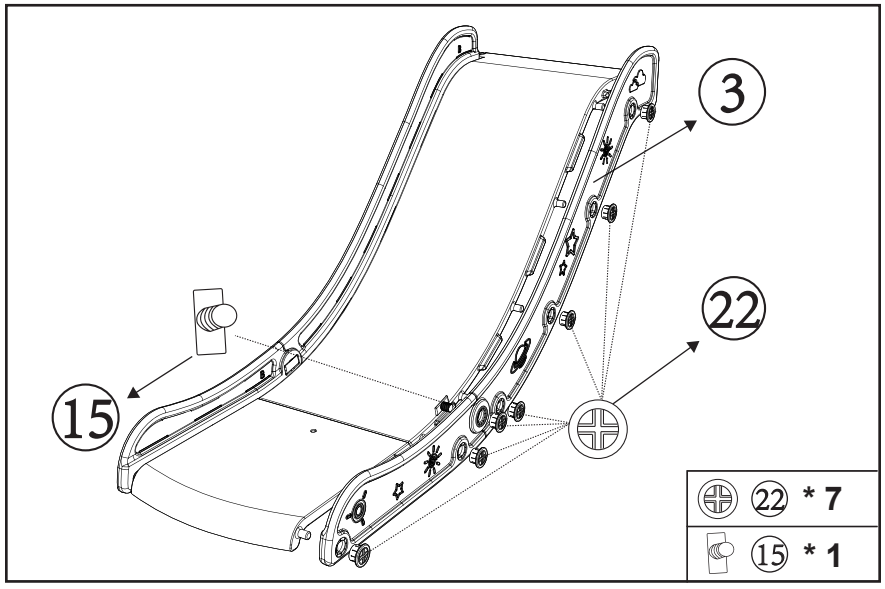

ASSEMBLING

STEP 3

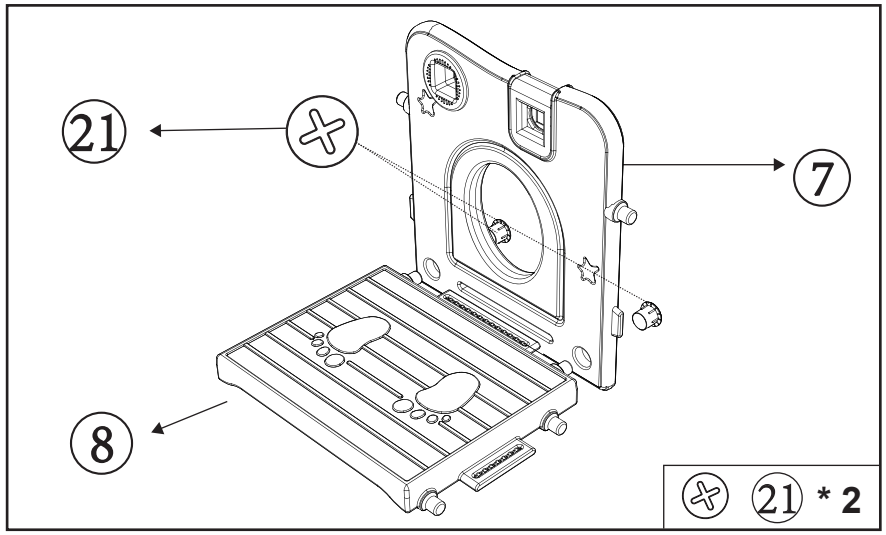

STEP 4

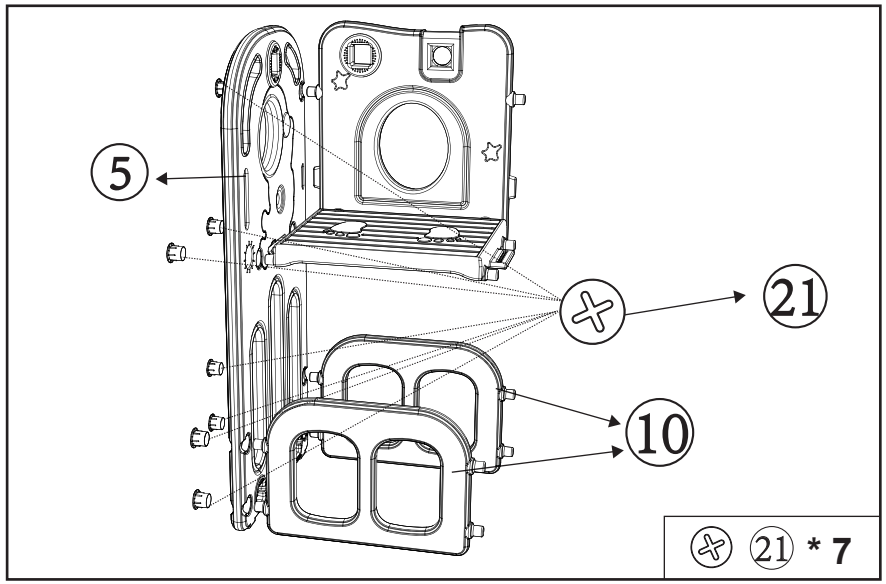

ASSEMBLING

STEP 5

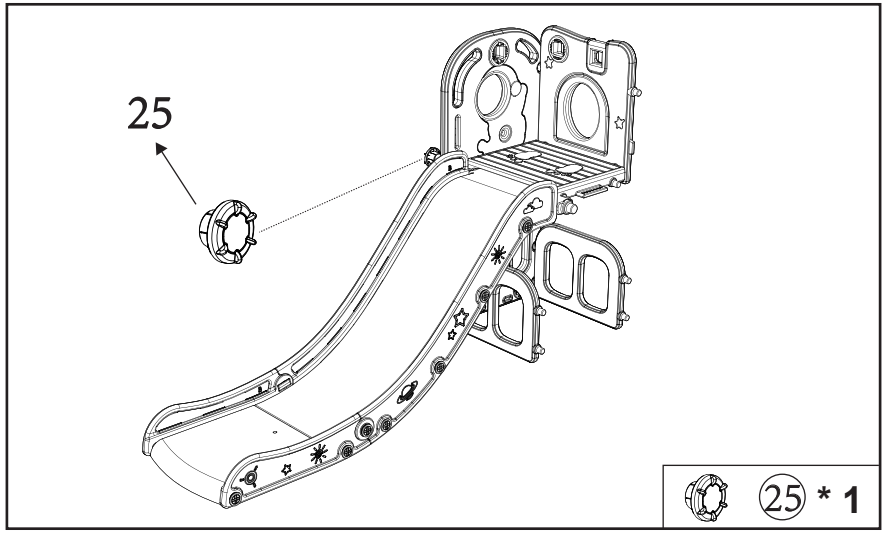

STEP 6

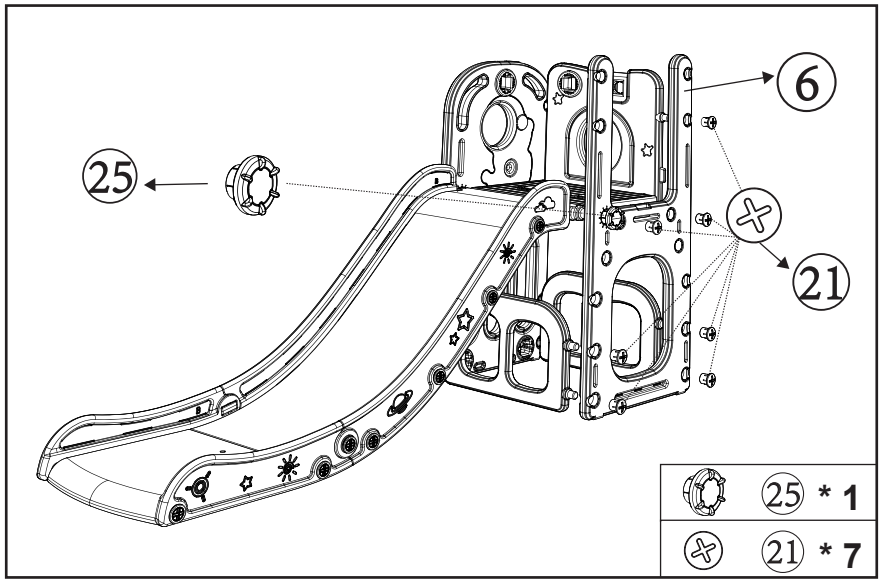

ASSEMBLING

STEP 7

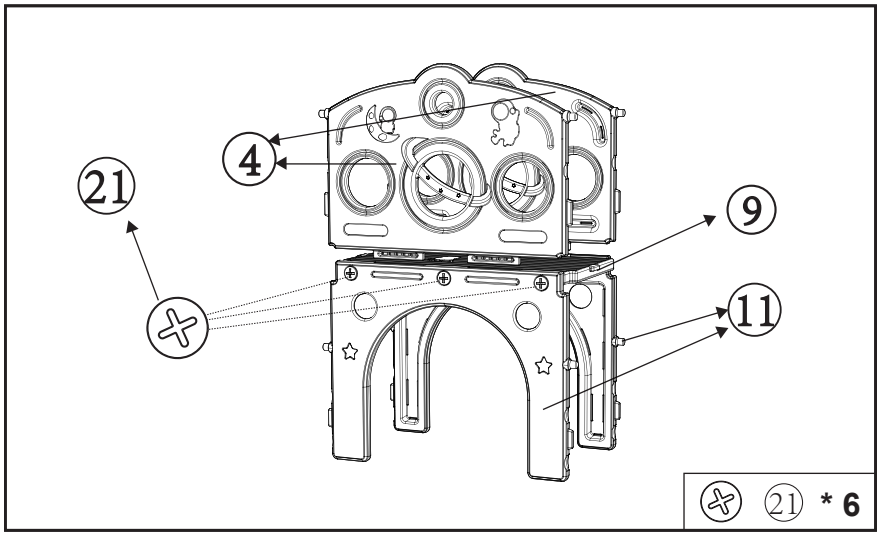

STEP 8

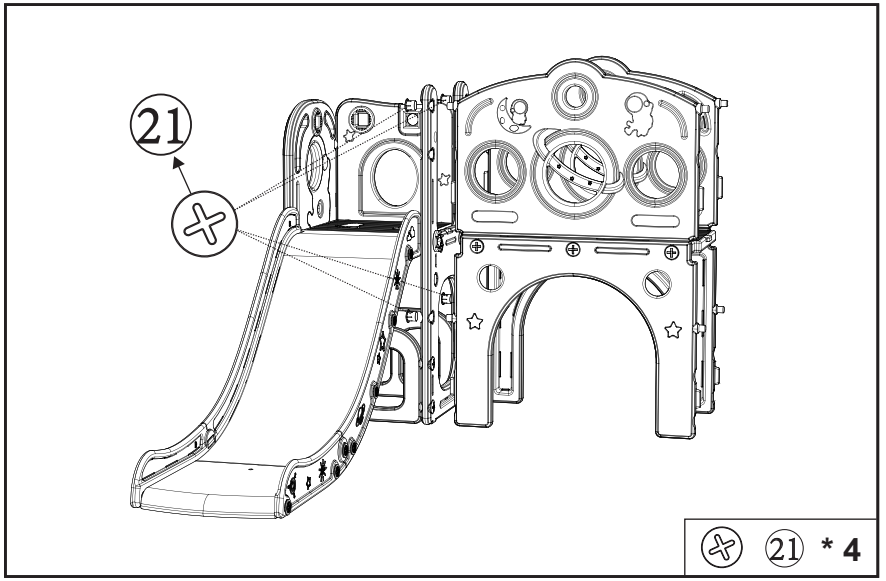

ASSEMBLING

STEP 9

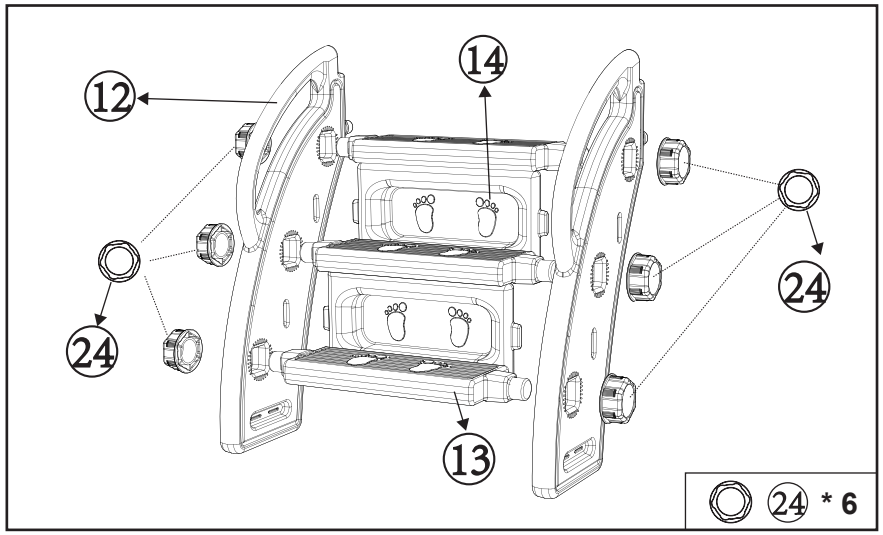

STEP 10

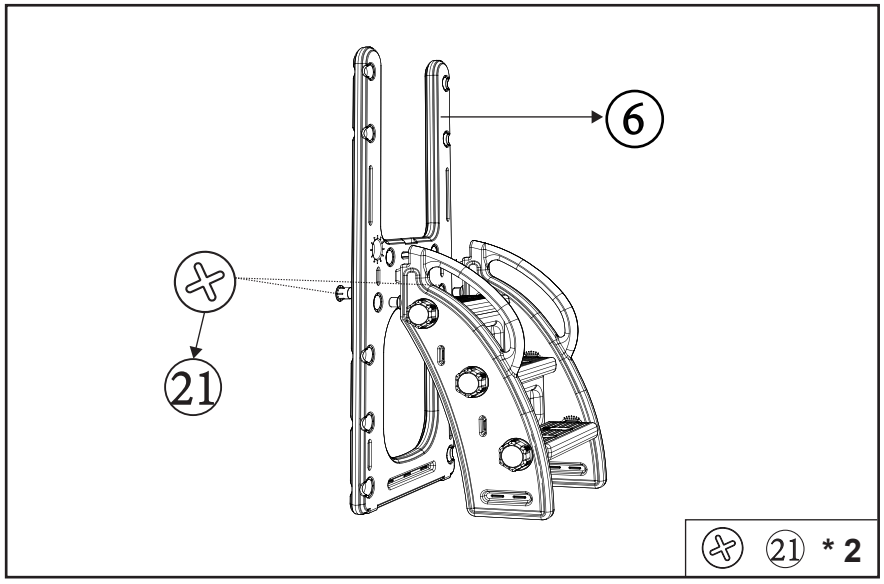

ASSEMBLING

STEP 11

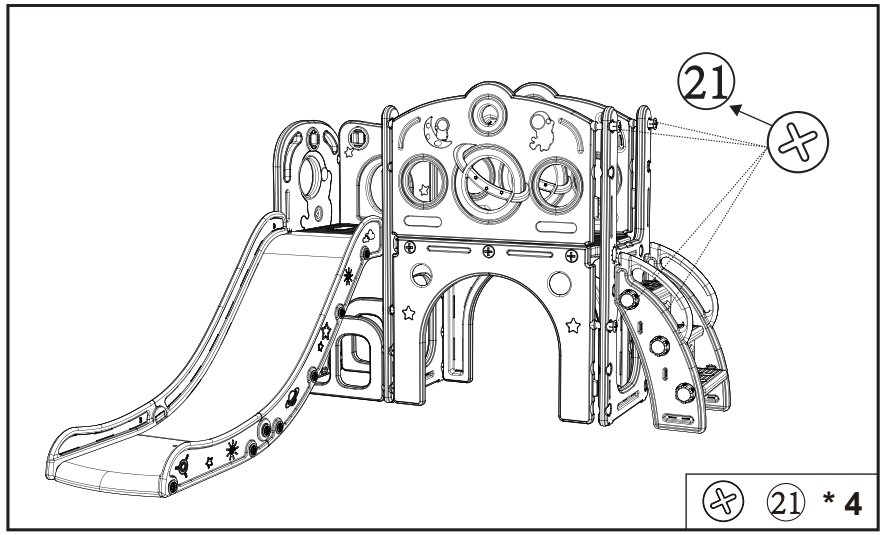

STEP 12

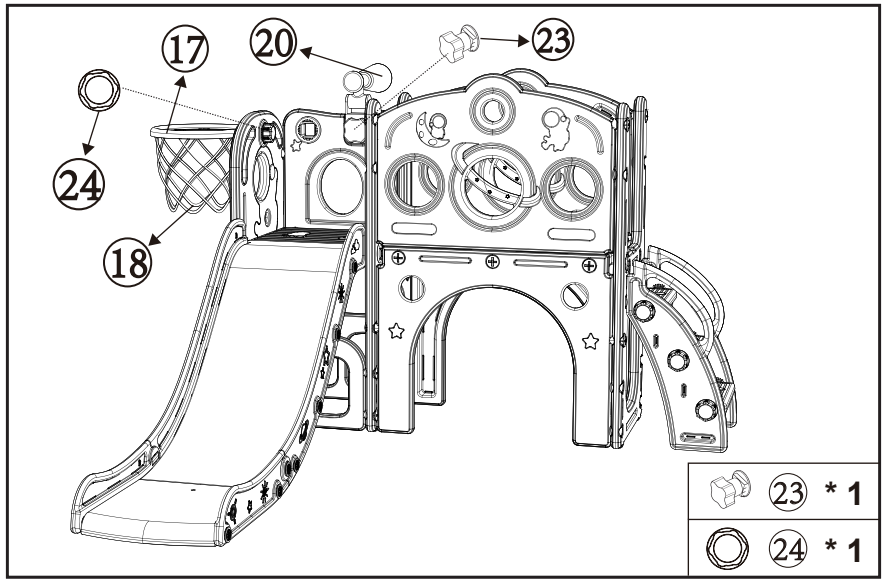

BASKETBALL NET INSTALLATION STEPS

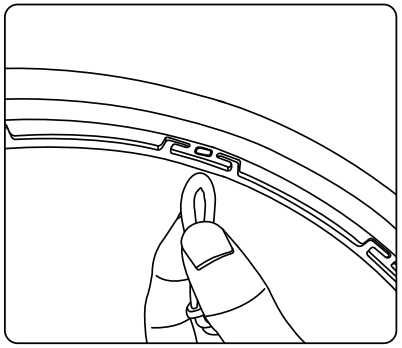

❶ Pick up one end of thebasketball net.

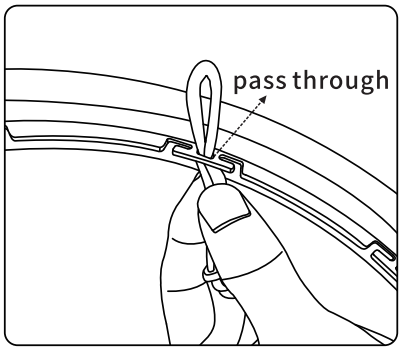

❷ Pass the basketball net through the middle of the basketball hoop hanging hole.

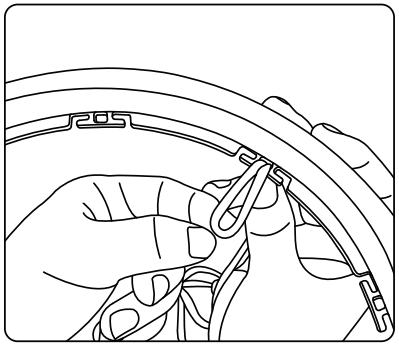

❸ Reserve enough passed parts to facilitate subsequent operations.

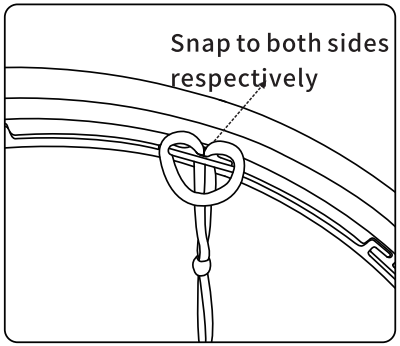

❹ Snap the basketball net into the grooves on both sides of the hanging hole.

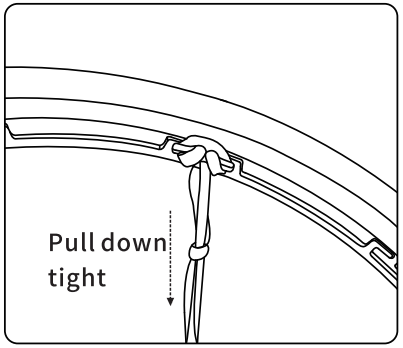

❺ Tighten the basketball net downwards so that the ropes passing through the hanging holes form a double knot.

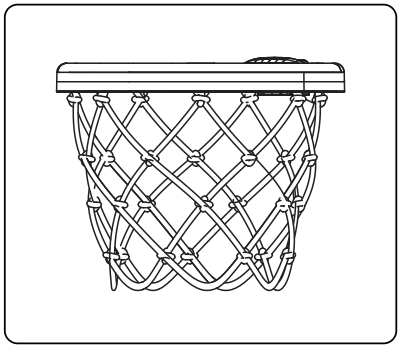

❻ Use the same method to hang basketball nets in other directions to the corresponding holes.

Please scan the QR code below to view the installation guide!

THANK YOU

Thank you for purchasing the kid slide from our store. If you experience any problem while using it, please feel free to contact us. We will solve the problem for you quickly and provide the best customer service!

E-mail Service : toddlerslide@gmail.com