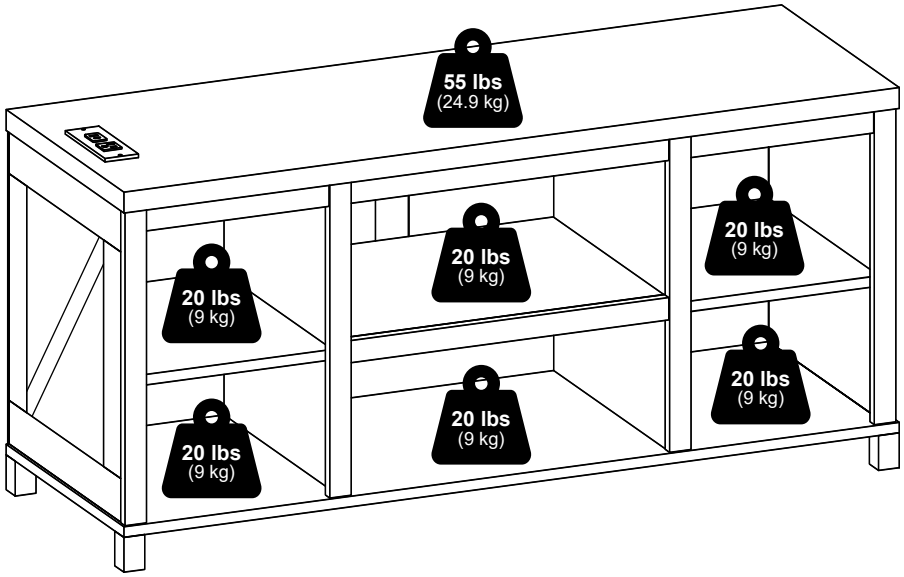





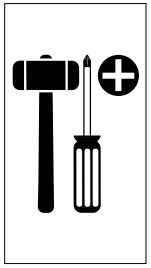

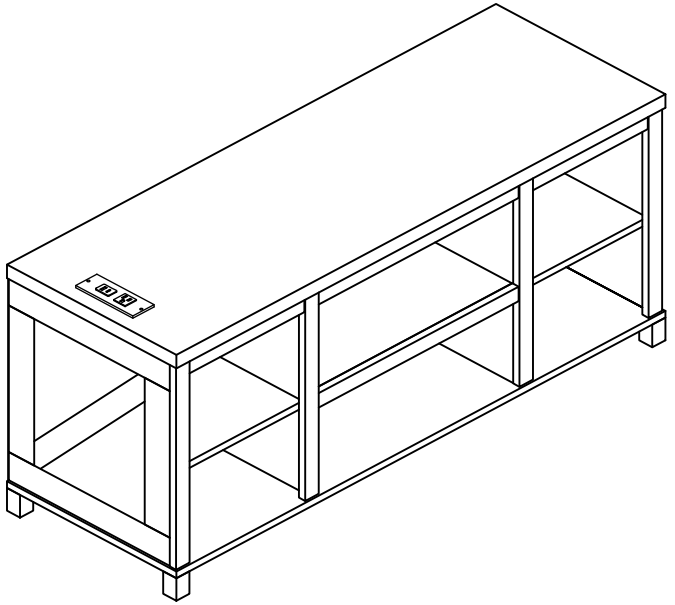

MODEL: 25174

2517420250821

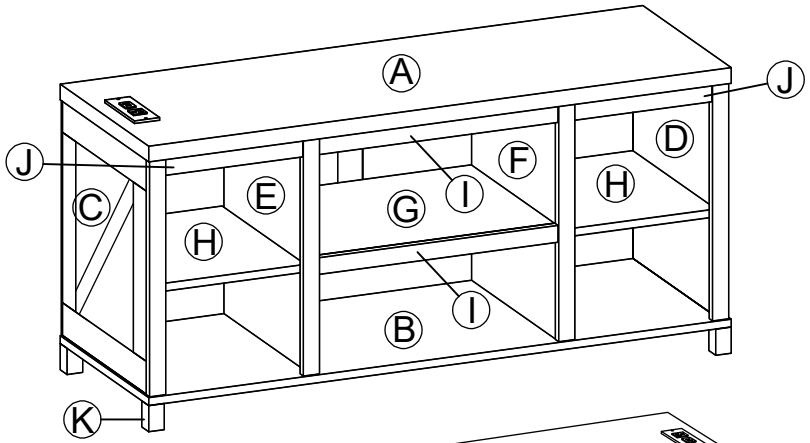

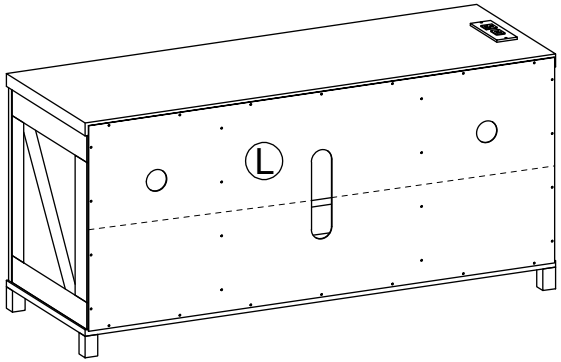

1 x 8	2 x 8	3 x 24 M8 x 30mm
4 x 6 M6 x 30mm	5 x 14 M4 x 38mm	6 x 8 M4 x 30mm
7 x 12	8 x 30 4.0 x 20mm	9 x 1
10 x 2 M3.5 x 12mm	11 x 1	

7

Step 7.1

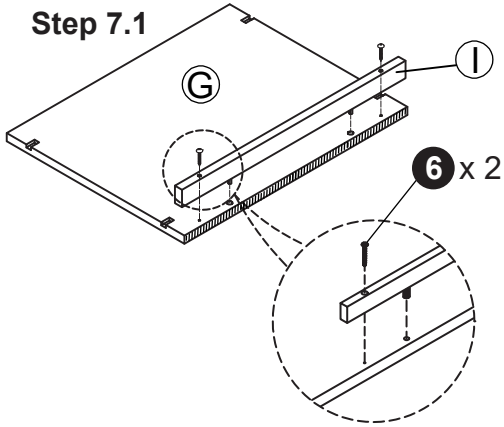

Step 7.2

Step 7.3

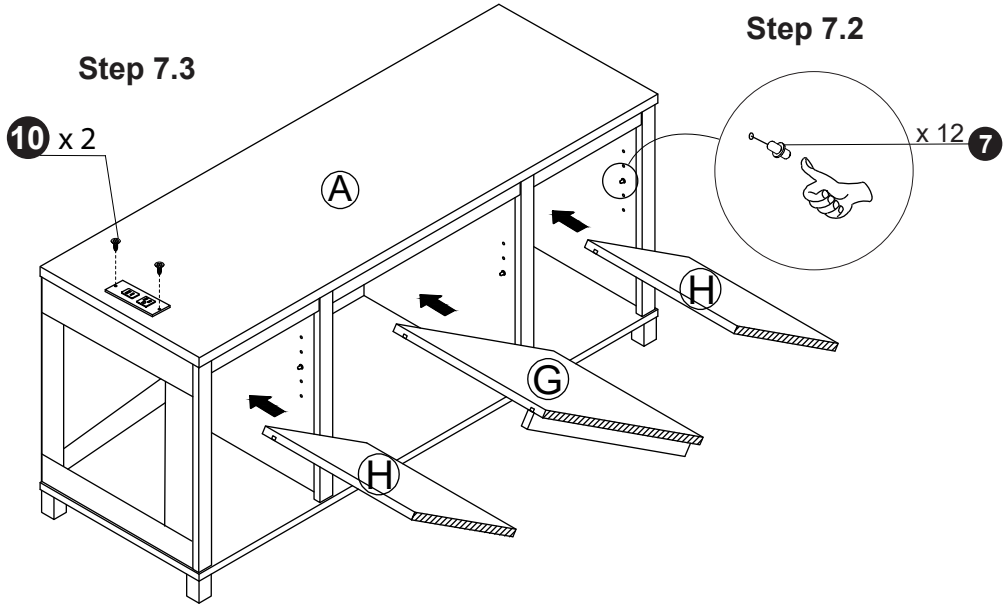

6

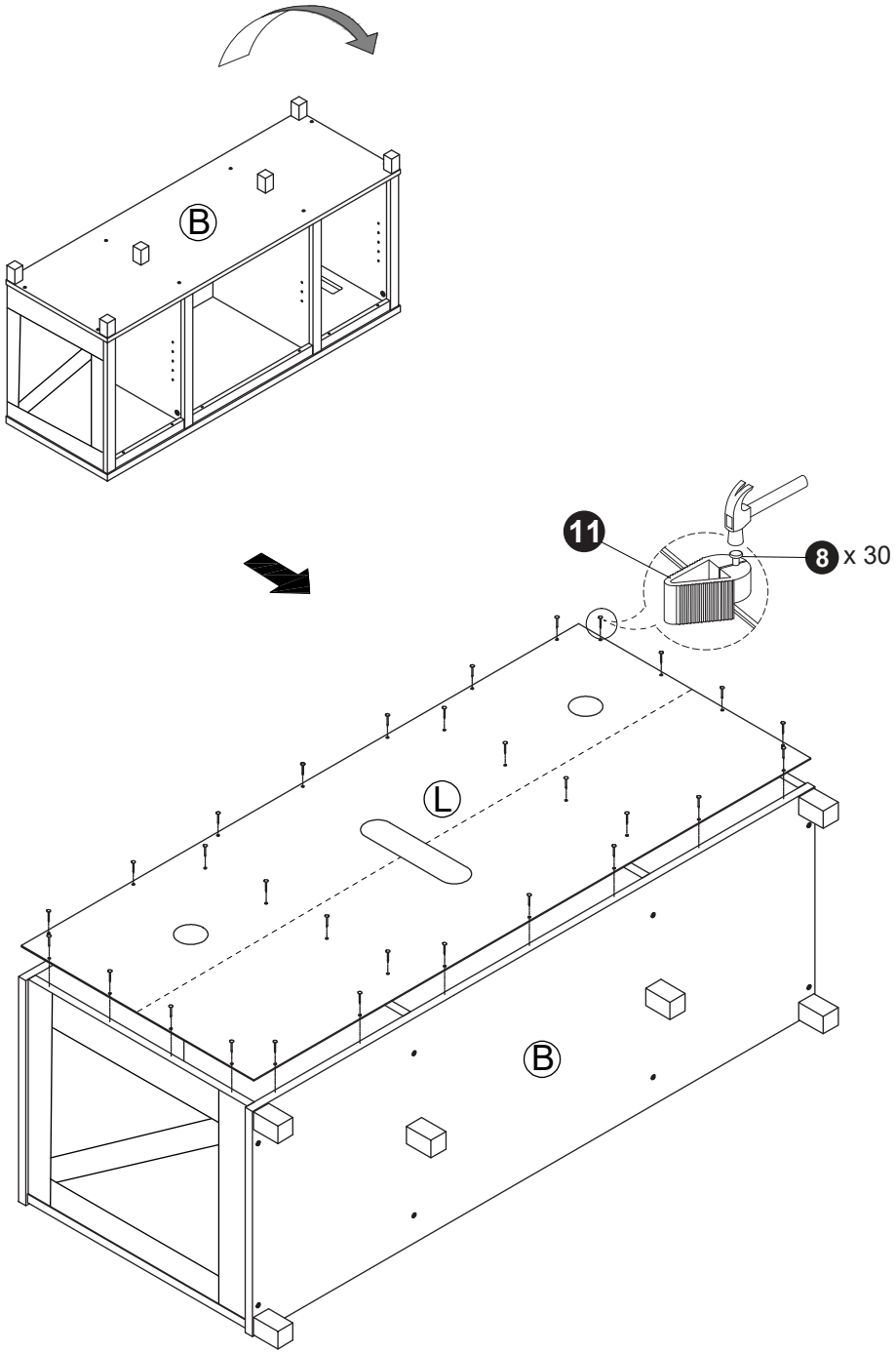

1

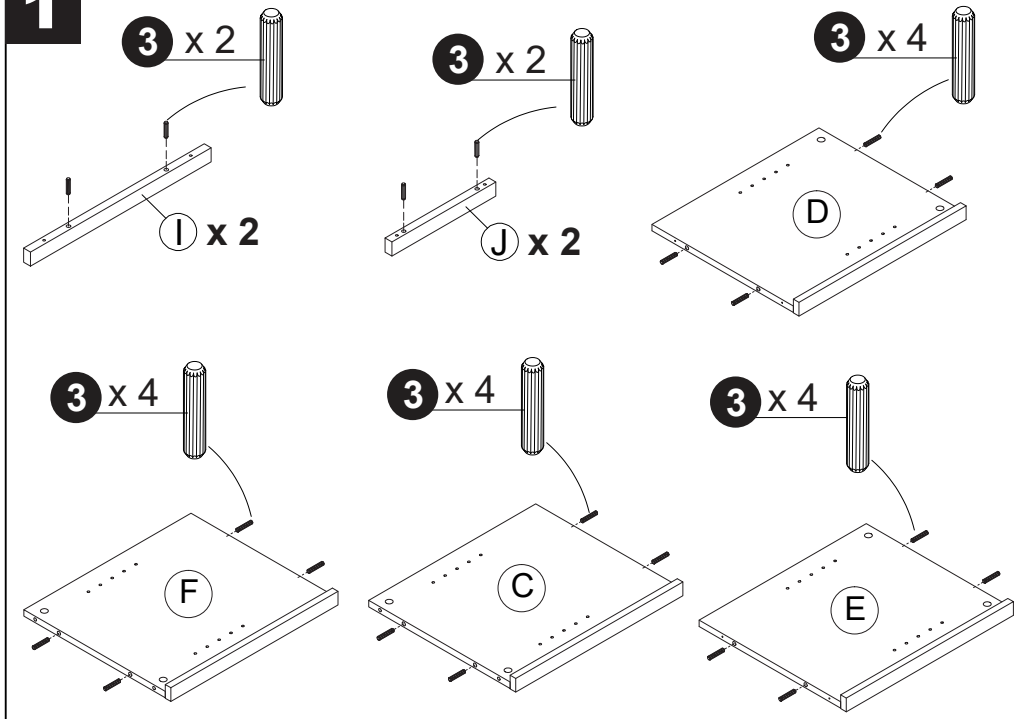

2

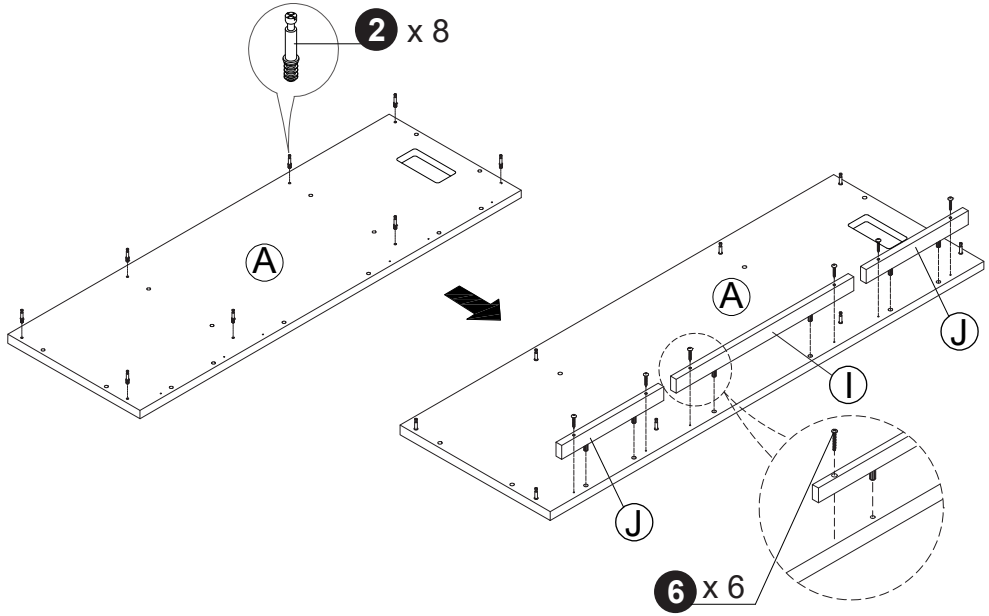

3

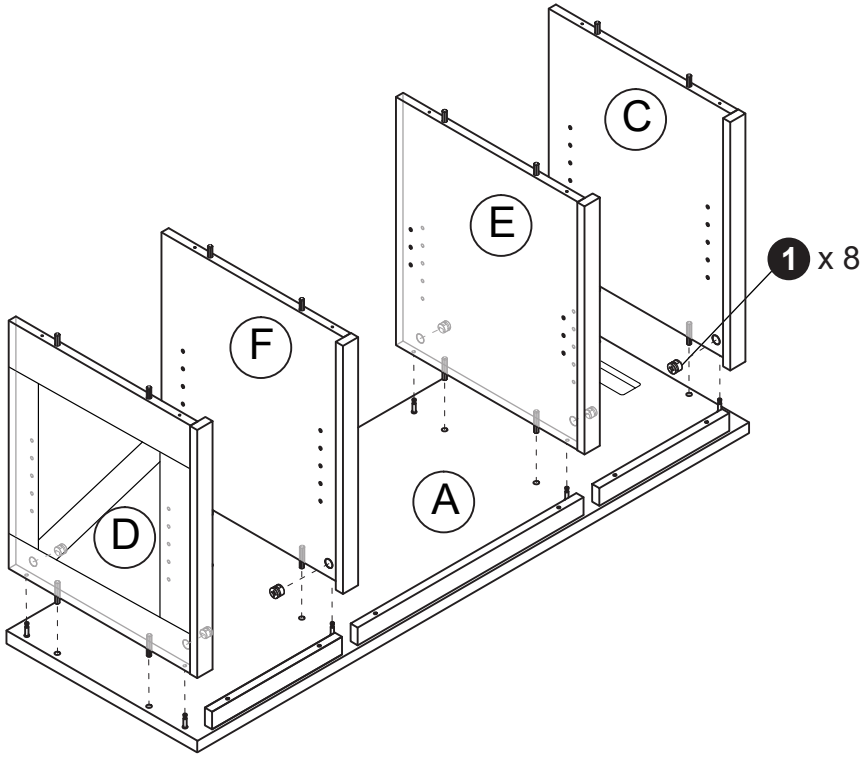

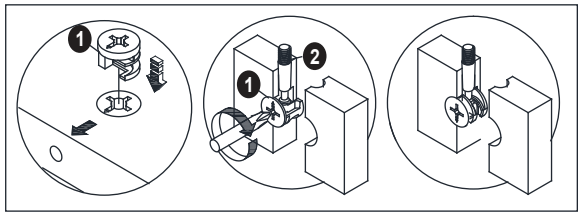

4

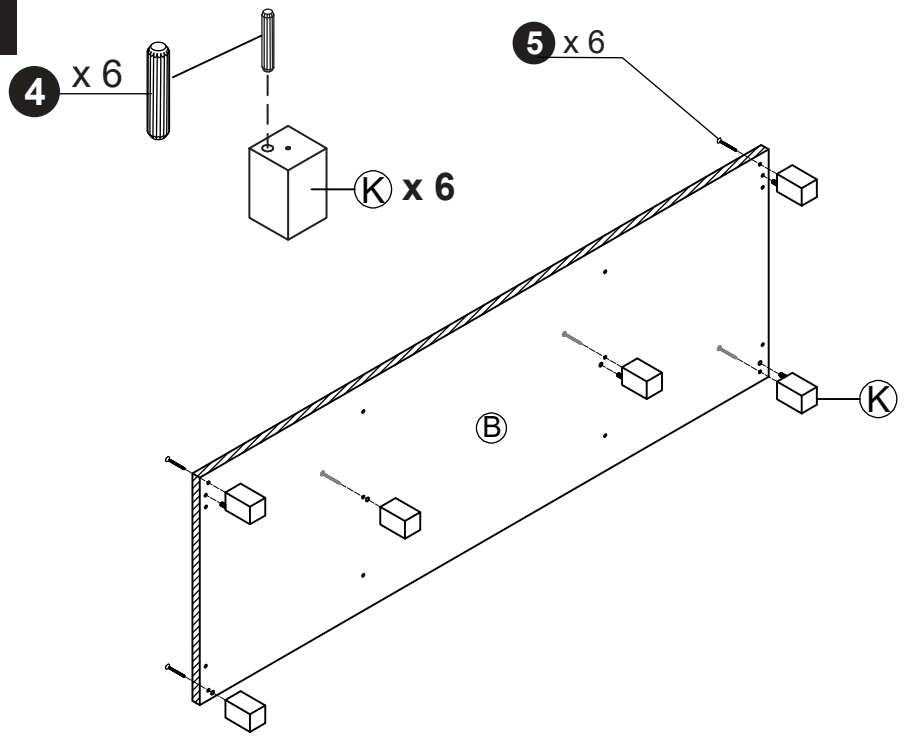

5

