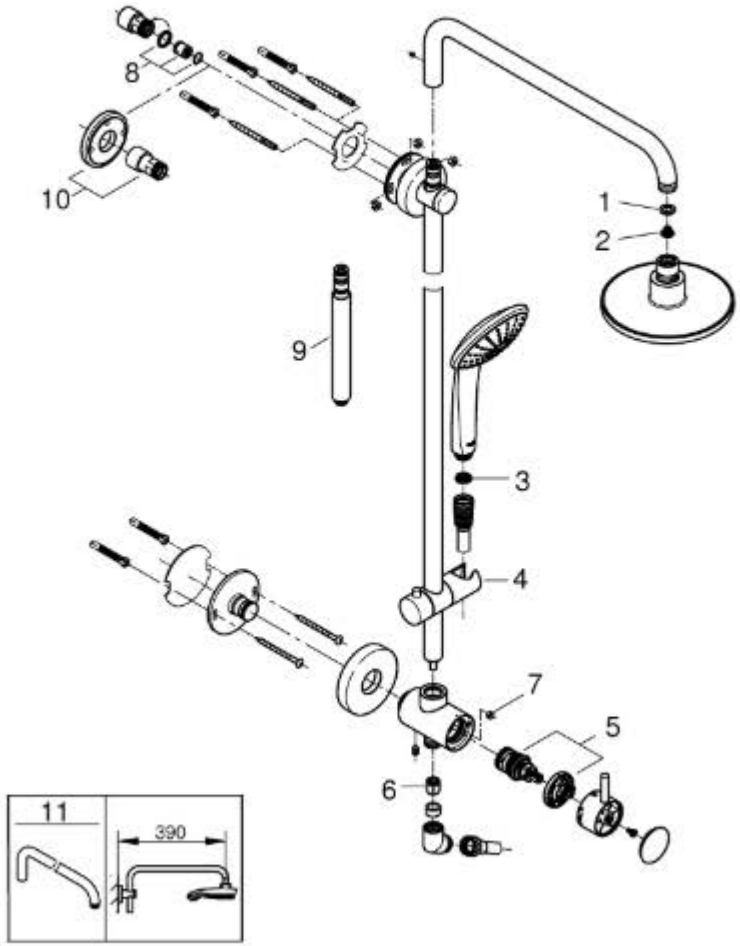

Pos.no	Prod. Description	Order no.
1	Fibre seal Ø 18,5 x Ø 12 x 2	0138900M
2	Dirt strainer	0676800M
3	Dirt strainer	0700200M
4	Glide element	12140000
5	Diverter	48058000
6	Non-return valve	08565000
7	Flow limiter	48160000
8	non-return valves	48183000
9	Retrofit 6” height extension	26464000*
10	Compensation disc	26030000*
11	Shower arm for shower systems	14047000*

* Optional accessories