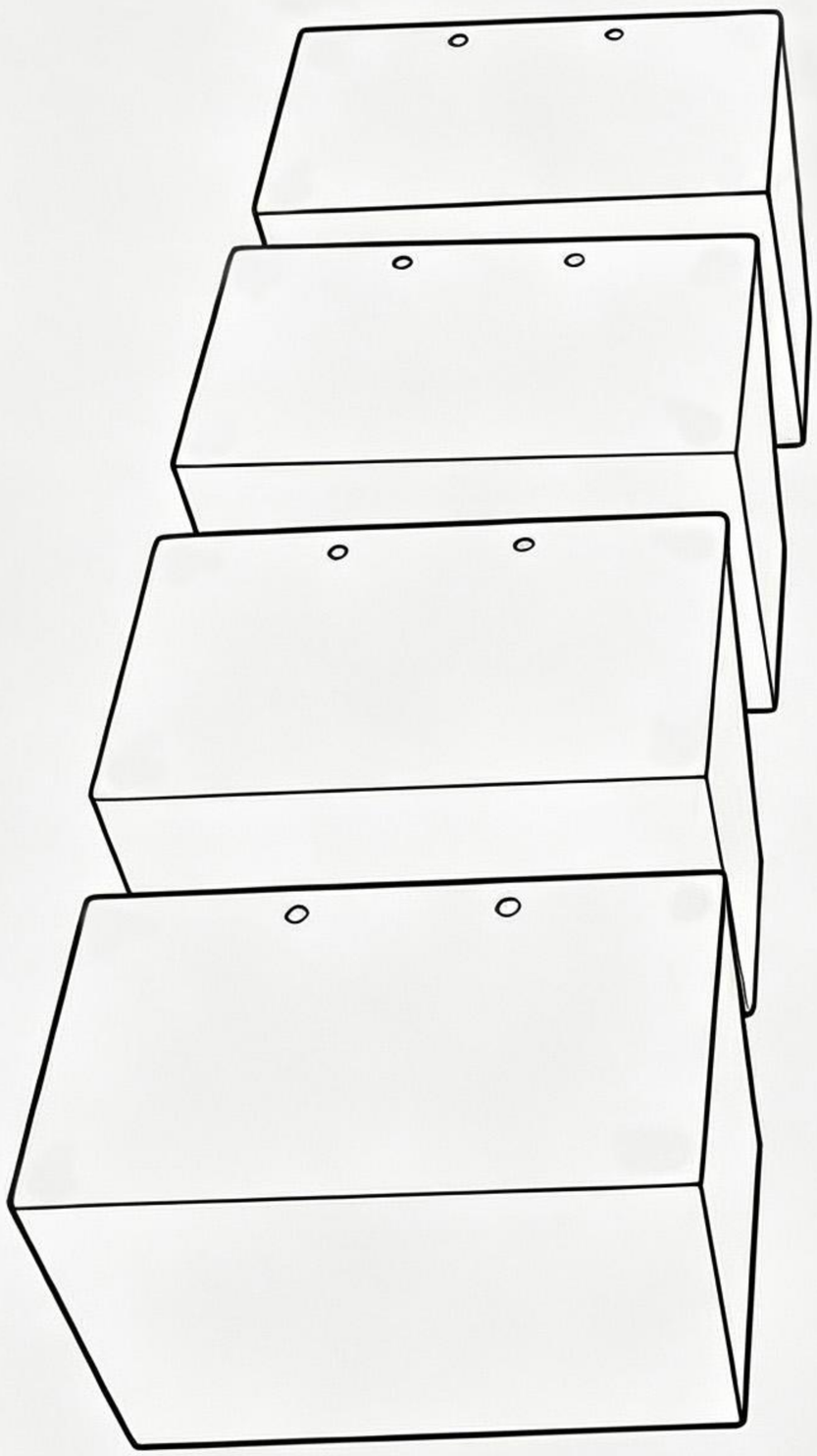

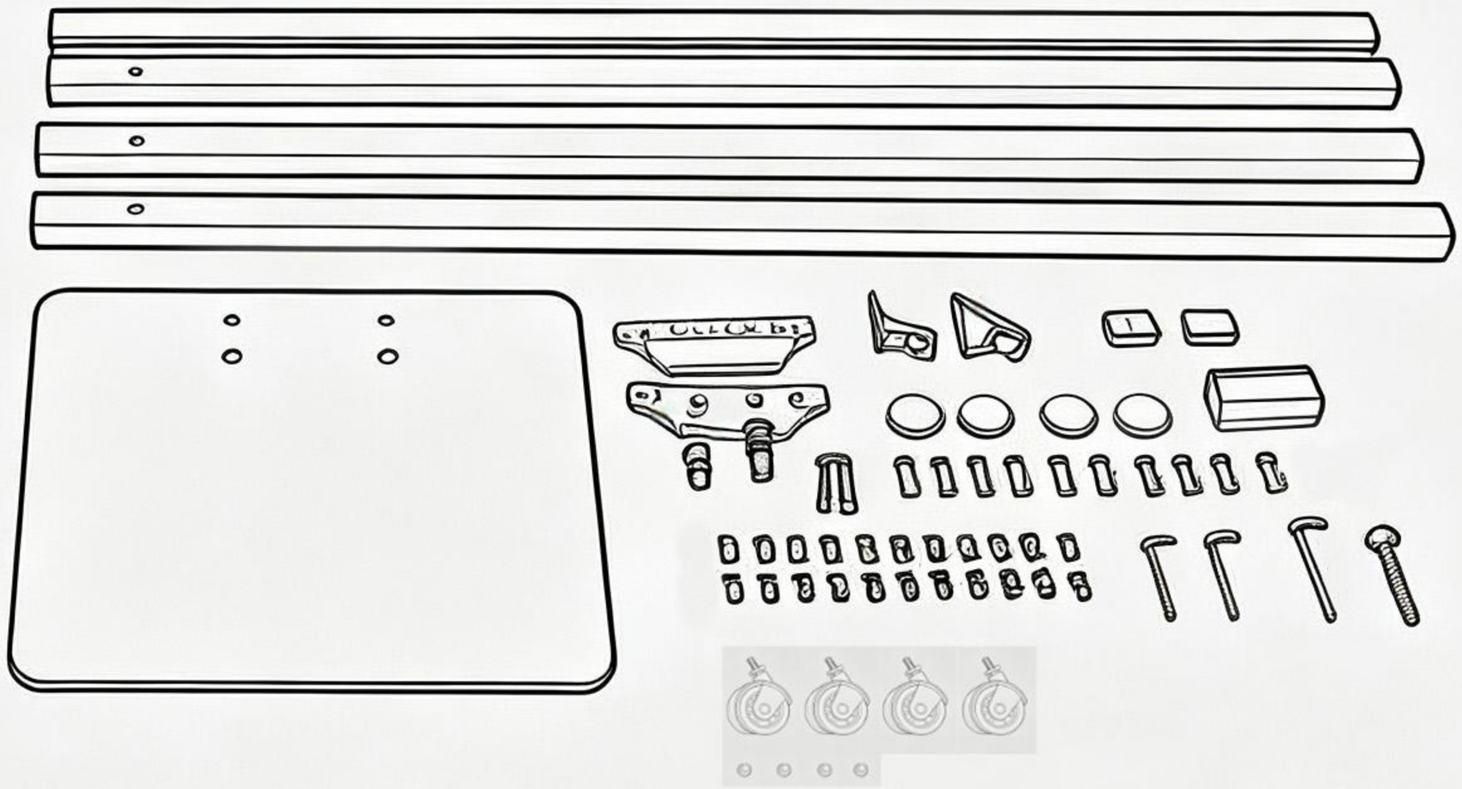

1、Two horizontal bars are linked together by a plug and then fixed together with six short screws.
2、Use coarse screws to link the crossbar and the base together. Two reinforcing angle brackets are installed on the side of the crossbar, and they are fixed in place with short screws and nuts.
3、Use short screws to connect the storage box and the crossbar together, and secure them with nuts. Then, install different color sequences according to your own preferences.
4、The top is fixed and tightened with two long screws, and then the square plug can be installed to complete the process.

Note: If you encounter any difficulties during assembly, please contact us and we will provide installation videos to assist you in assembling more quickly!