Sconce

Hard wired installation

CAUTION: Be sure the power is turned off by either removing the fuse or closing the circuit breaker. Installation must be in compliance with National, State and Local electrical codes. Please use a licensed electrician

Each light fixture, with the exception of post-mounted lanterns, has a mounting bar or plate to secure it to the electrical junction box.

No matter what type of mounting bar/plate your fixture uses, installation requires three basic steps.

A. Attach the mounting bar/plate to the electrical junction box.
B. Connect the electrical wires from the junction box to the electrical wires of the light.
C. Secure the fixture to the mounting bar/plate.

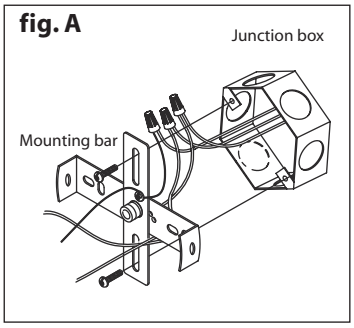

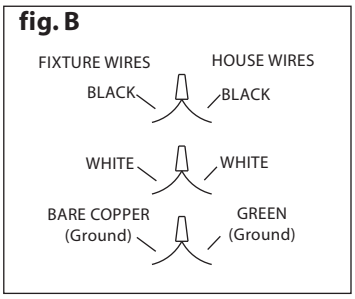

A. Attaching the Mounting Bar/Plate

1. Carefully unpack your new fixture and lay all parts on a clean surface. Be careful not to lose any small parts necessary for the installation.
2. Pull the electrical wires part way out of the junction box for easier access.
3. Attach your light fixture's mounting bar to the electrical junction-box (fig. A)

B. Connecting the Electrical Wires

1. Connect the light fixture wires to the wires from the junction box as shown (fig. B) white to white, black to black and ground to ground. If there is no ground wire from the junction box, connect the fixture ground wire (green or copper) to the mounting bar with the green screw provided. Be certain that all connections are tight and NO bare wire is visible. (note: ground wire will show bare wire.)
2. Tuck the wires into the junction box.

C. Securing the Light Fixture to the Mounting Bar

1. Place the light fixture against the outlet box and line up the mounting holes of the fixture in the middle of the mounting plate.
2. Secure the fixture to the mounting bar using the decorative screws provided with your fixture (fig. C).*
3. Install the appropriate light bulb and attach the shades to the fixture and restore the power to the junction box .
4. Your installation is complete.

To clean your fixture, lightly dust with a soft cloth.
DO NOT USE abrasives or ammonia.

