Parts and Damage Replacement Procedure

1. Please inspect your purchase immediately.
2. This procedure covers product purchased from an authorized Roundhill Reseller and was received in its originally sealed carton.
3. If you find a part missing or damaged, you have a 30-day window in which to order a replacement part from the date on your purchase receipt.
4. You have 3 ways to do this. You will need a copy of your purchase receipt.

5. Once this order is sent in, you will be notified if the part(s) you are requesting can or cannot be shipped within 7-10 business days.

A COPY OF YOUR PURCHASE RECEIPT OR INVOICE MUST BE ATTACHED TO THIS ORDER FORM.
NO ORDERS WILL BE PROCESSED WITHOUT PROOF OF PURCHASE.

REASON FOR REPLACEMENT/PLEASE CHECK APPROPRIATE BOX.

( ) Damaged /scratched, cracked, broken, crushed, etc.
( ) Mechanical malfunction/ drawer glides, swivel mechanisms, lid stays, etc.
( ) Missing pieces
( ) Unfinished surface
( ) Wrong color
( ) Other

IF MORE THAN ONE MODEL NUMBER IS LISTED ABOVE, PLEASE SPECIFY THE EXACT MODEL NUMBER OF YOUR ITEM IN THE SPACE PROVIDED BELOW.

Model Number	Part Letter Code	Quantity

ASSEMBLY INSTRUCTION

DESCRIPTION : Night Stand

Thank you for purchasing this quality product. Be sure to check all packing material carefully for small Hardware which may have some loose inside the carton during shipment. Identify and count all Hardware. Identify and count all Hardware and compare with the Hardware List Below.

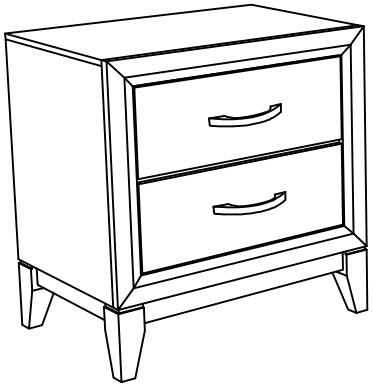

PART LIST

No	Description	Qty
A	Night Stand	1 Pc
B	Leg	4 Pcs

HARDWARE LIST
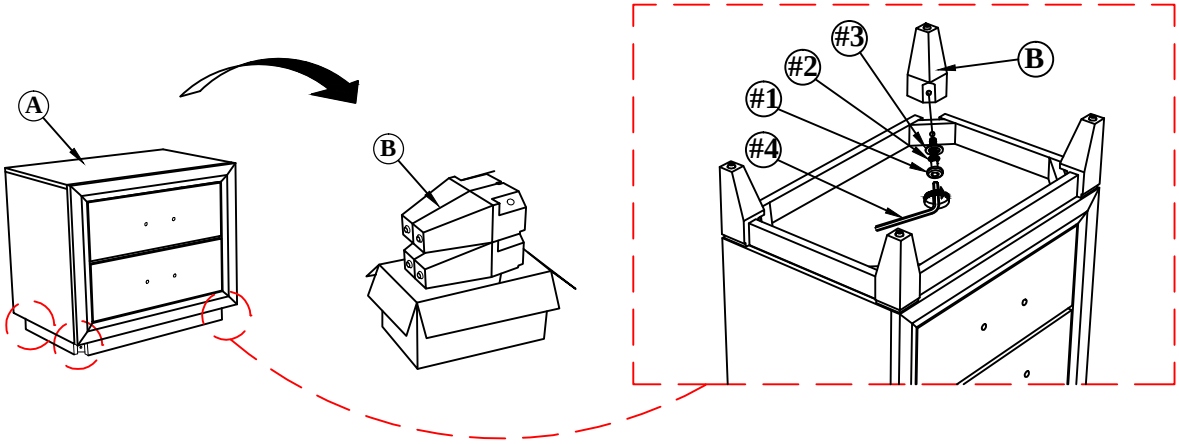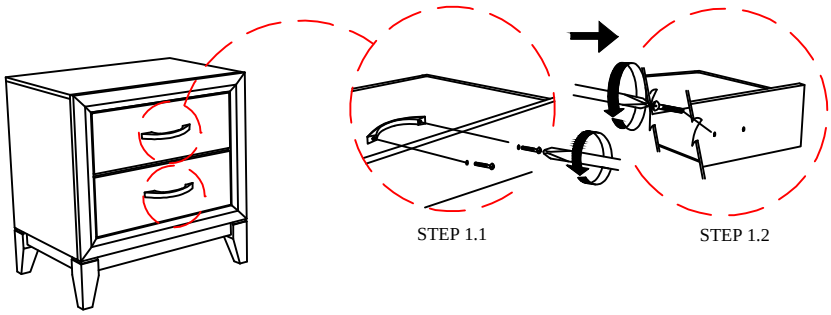
No	Description	Qty
#1	JCBC Screw M6 x 50mm	4 Pcs
#2	Spring Washer 1/4" RBW	4 Pcs
#3	Flat Washer 1/4"ID x 19mmOD Blk	4 Pcs
#4	Allen Key M4 x 65mm	1 Pc