ASSEMBLY INSTRUCTIONS

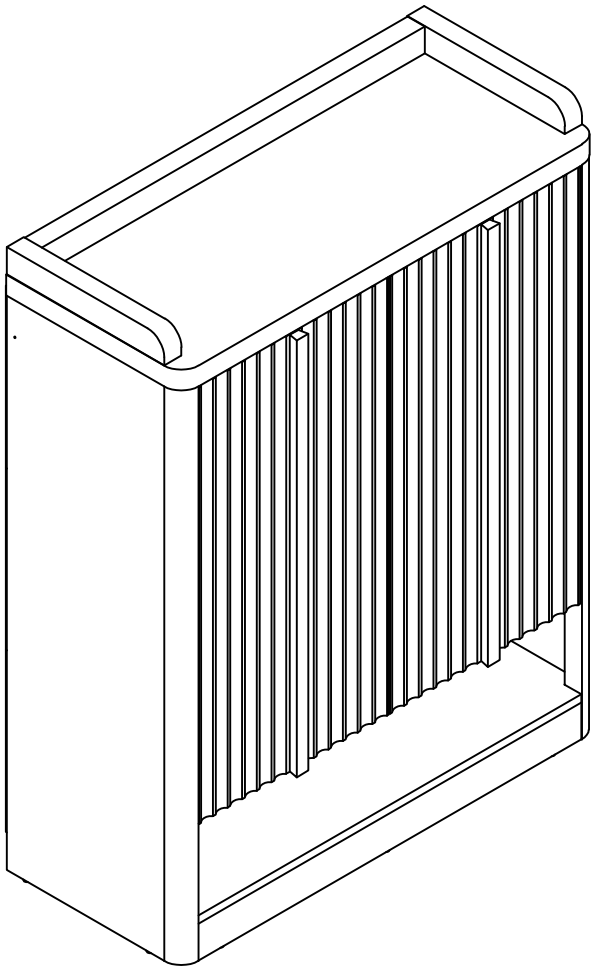

PACKAGE INCLUDE

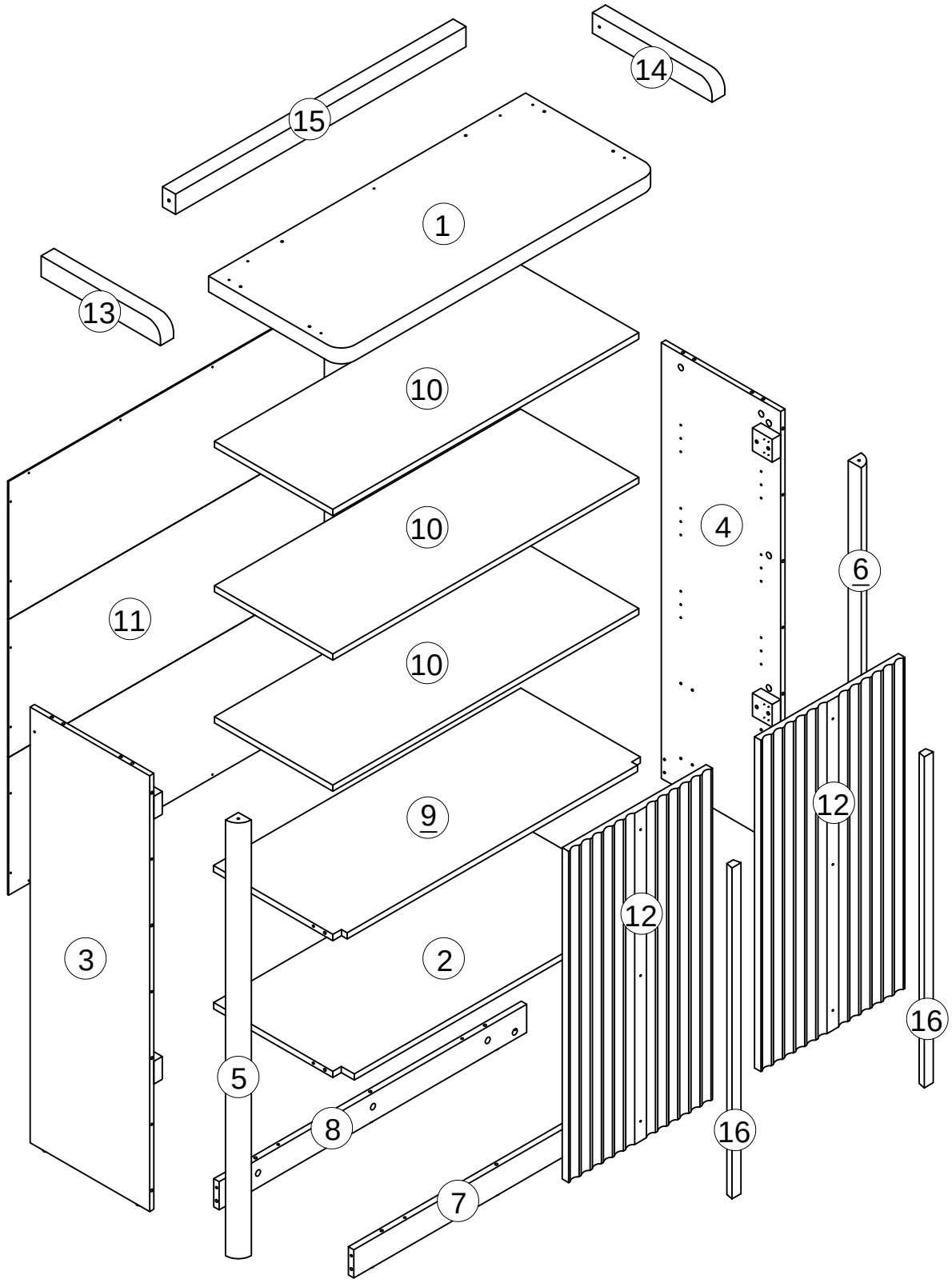

PACKAGE INCLUDE

CODE	DESCRIPTION	QTY
1	Top Panel	1
2	Bottom Panel	1
3	Left Side Panel	1
4	Right Side Plate	1
5	Left Column	1
6	Right Column	1
7	Bottom Vertical Panel	1
8	Rear Foot Plate	1
9	Shelves	1
10	Movable Shelves	3
11	Backplate	1
12	Door	1
13	Left Baffle	1
14	Right Stopper	1
15	Rear Stopper	1
16	Wooden Handles	2

PACKAGE CONTENT

Ø6X30MM 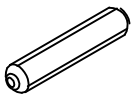 A 34X+2	Ø4X25MM  B 6X	Ø6X40MM 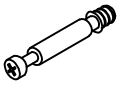 C 32X+2	Ø15X10MM 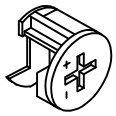 D 32X+2
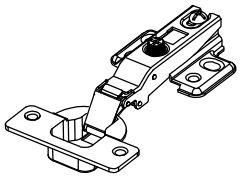 E 4X	Ø4X12MM 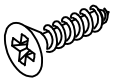 F 24X+2	Ø4X35MM 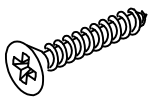 G 7X	Ø3X12MM  H 20X+2
 J 10X+1	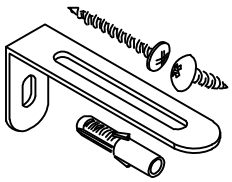 K 2X	Ø5X16MM  L 12X+1	

How to use the cam lock system

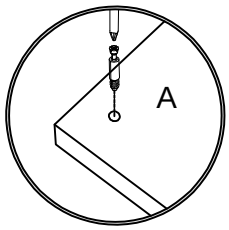

1.Screw cam boit into panel

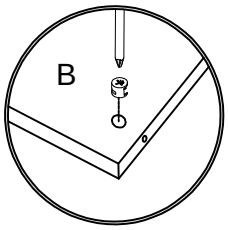

2.Push cam into panel - arrow feature on cam top points to panel edge

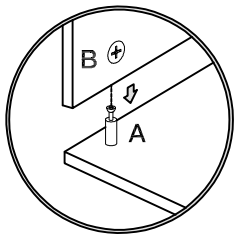

3.Aligu cam bolt(s) with cam(s) and insert all the way into cross-bored hole(s)

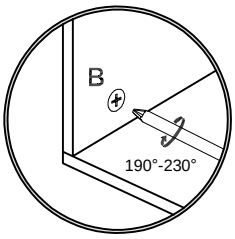

4.Rotate cam(s) clockwise 190°-230° to lock panels together

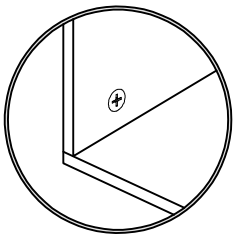

5.Panels should be tight against each other and connection should be rigid

Insert the wood dowel [C] at least half way by tapping lightly with a rubber mallet, IF NECESSARY.

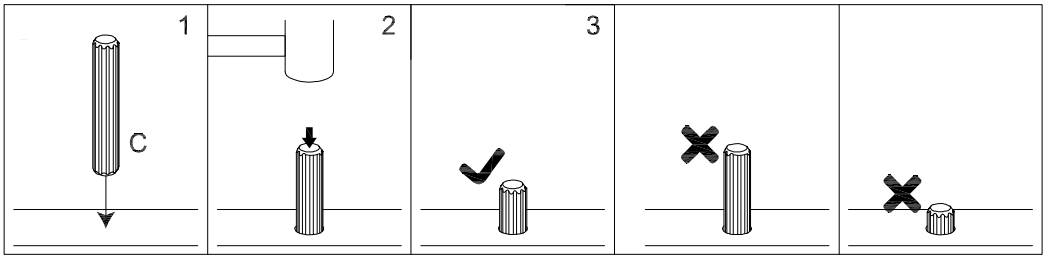

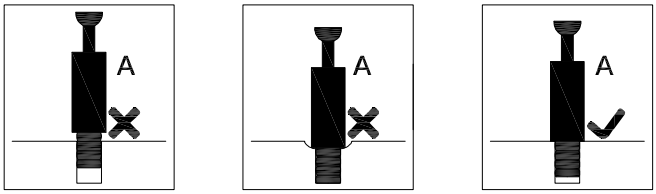

STEP 1

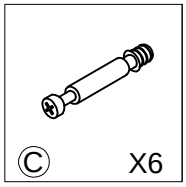

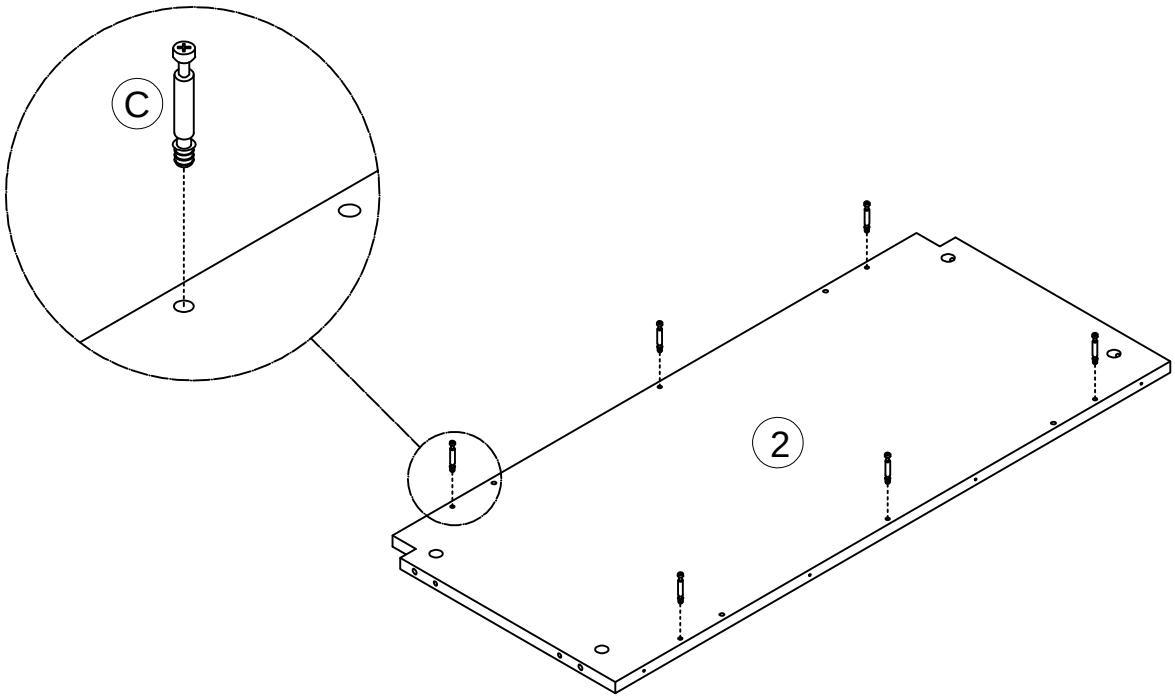

STEP 2

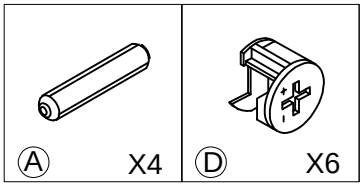

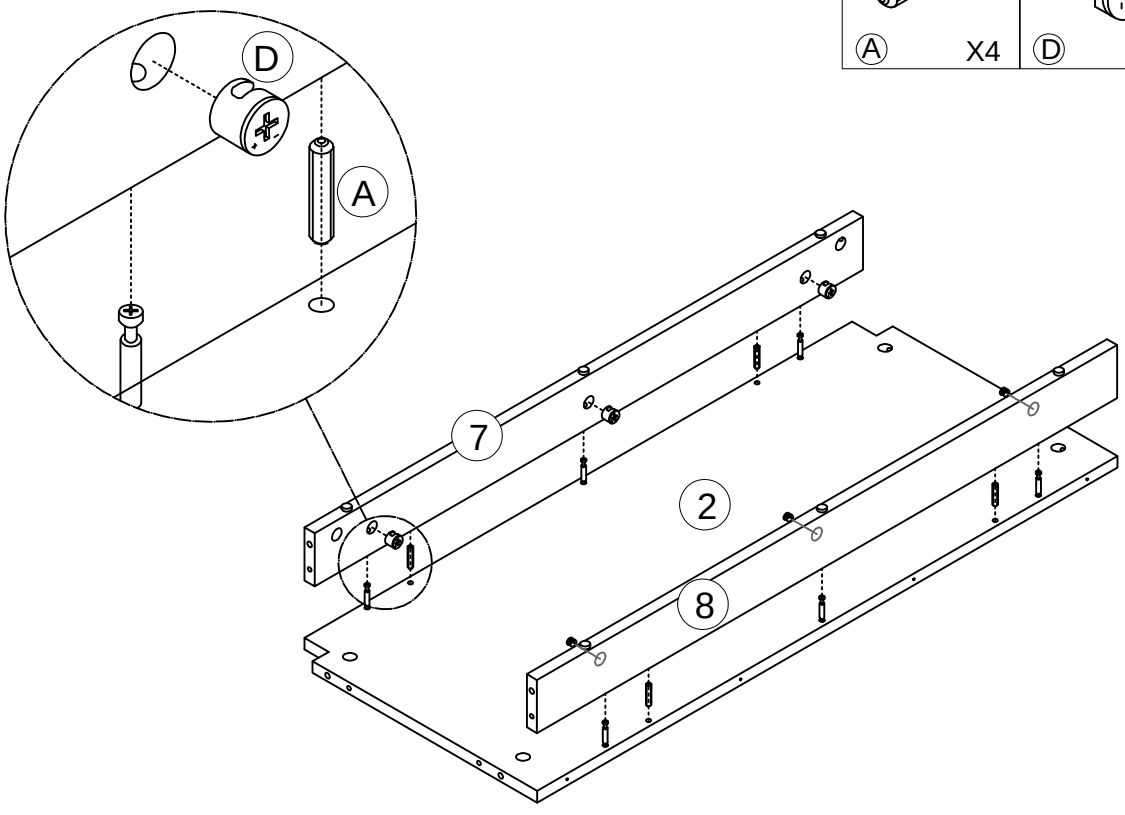

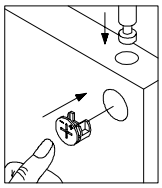

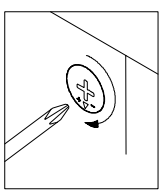

STEP 3

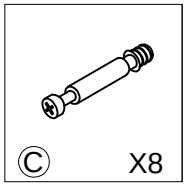

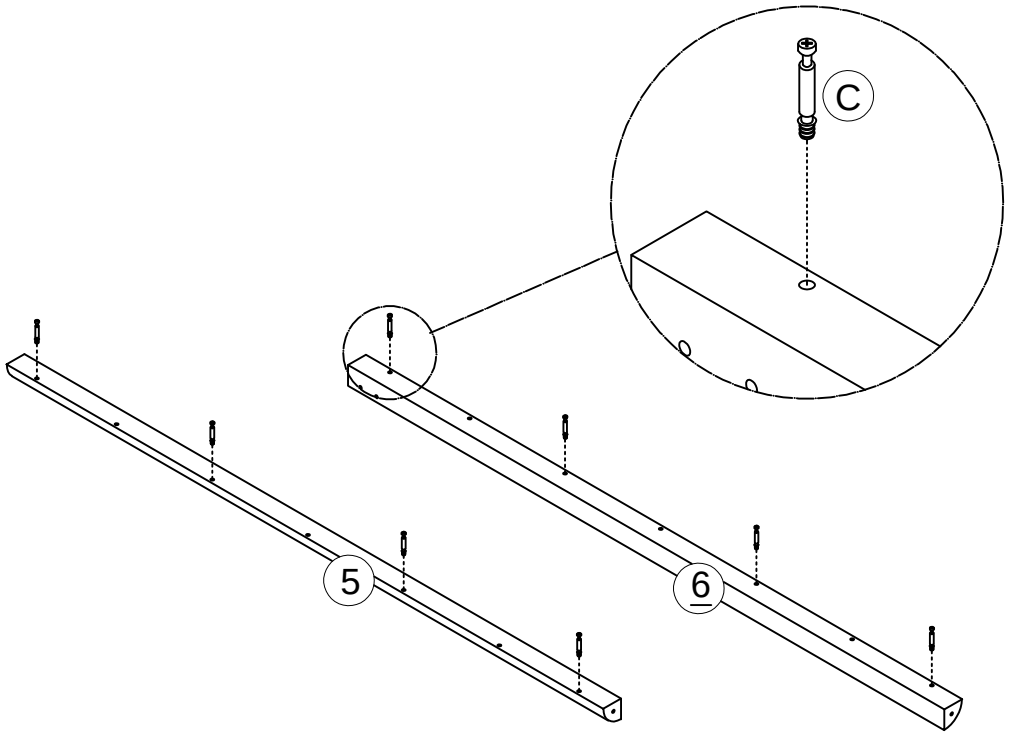

STEP 4

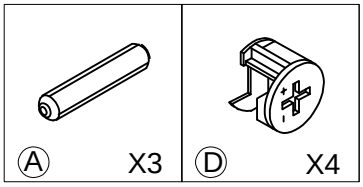

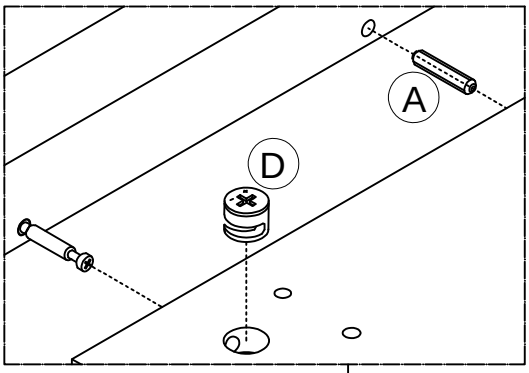

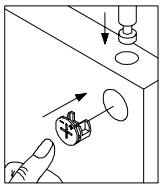

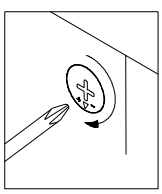

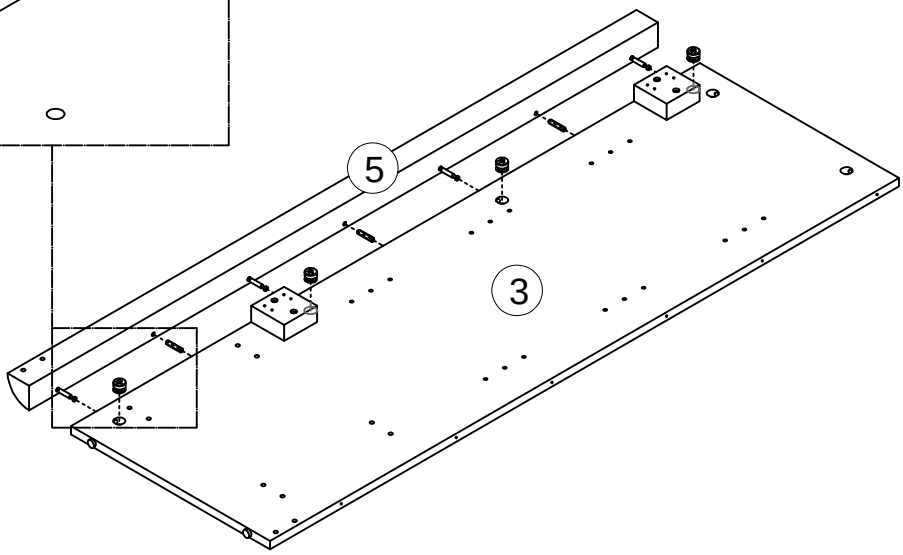

STEP 5

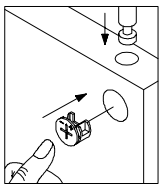

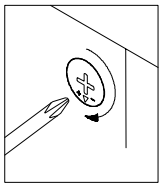

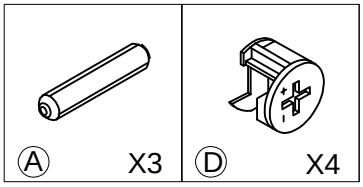

STEP 6

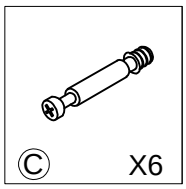

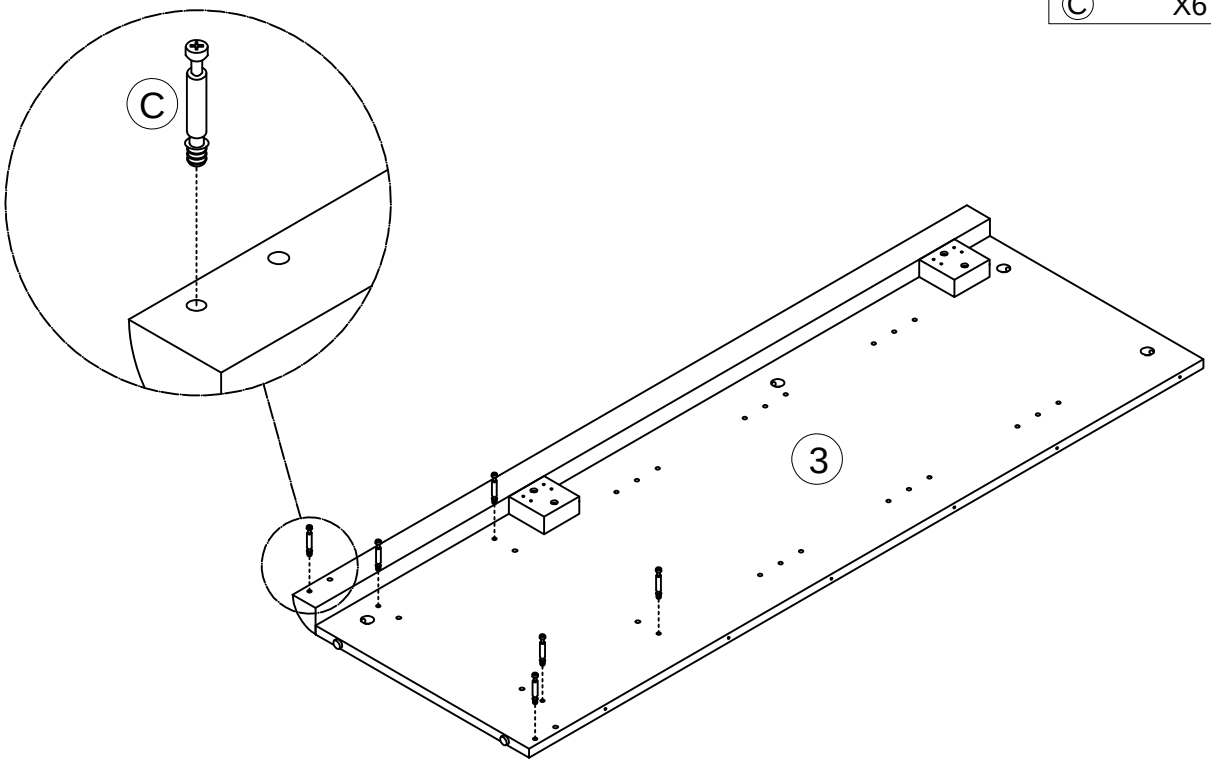

STEP 7

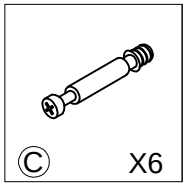

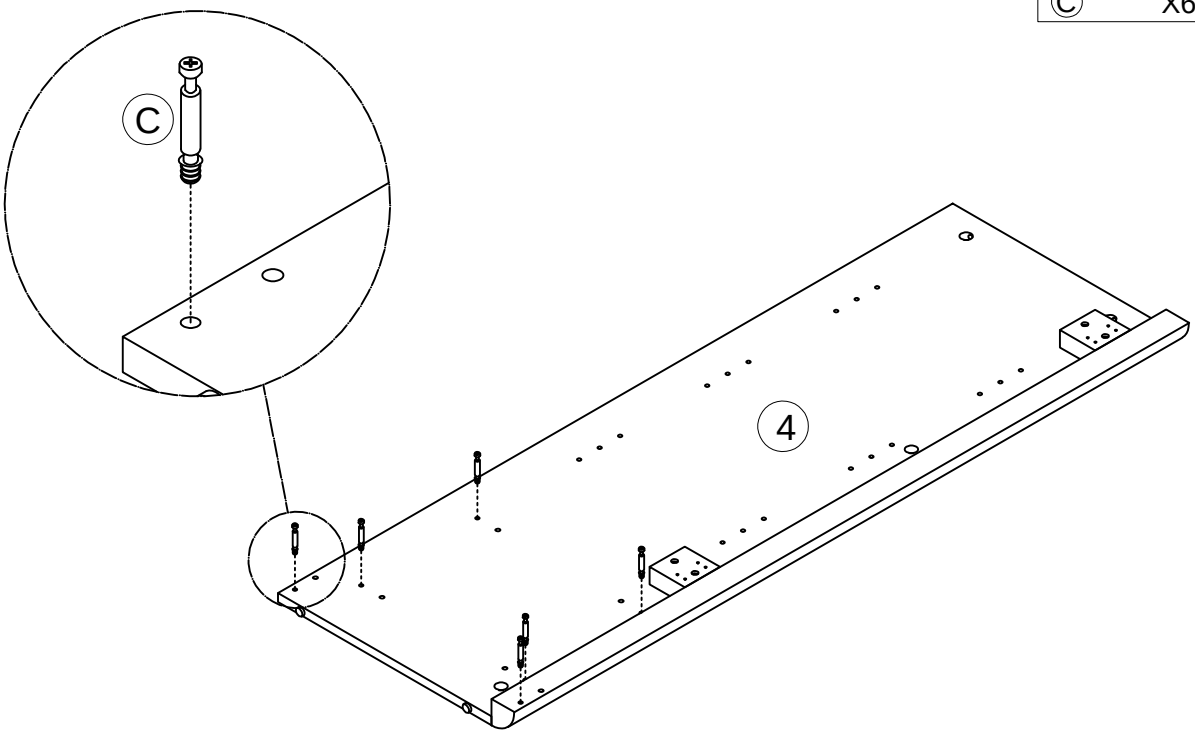

STEP 8

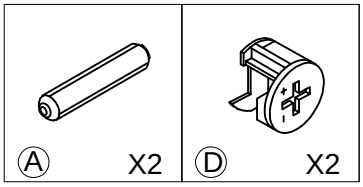

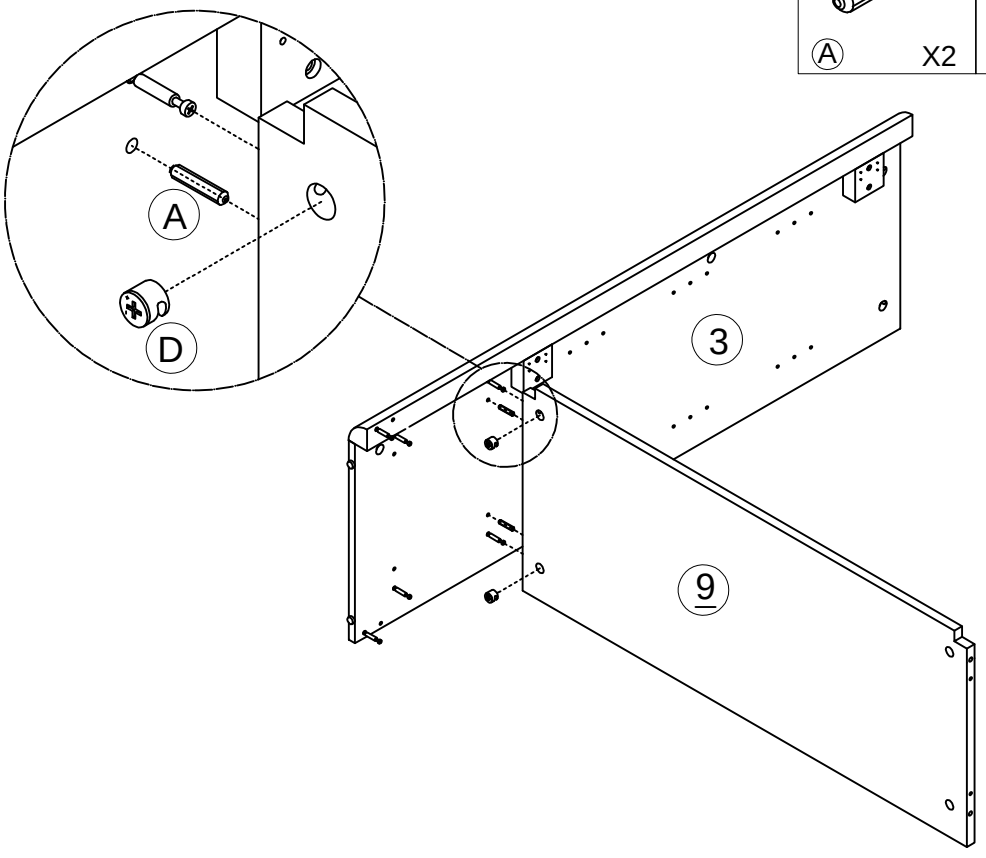

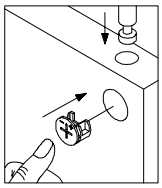

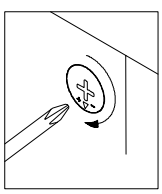

STEP 9

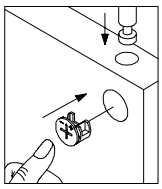

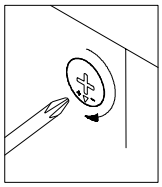

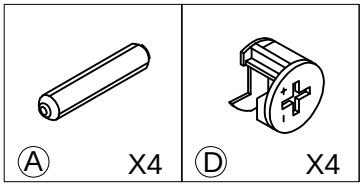

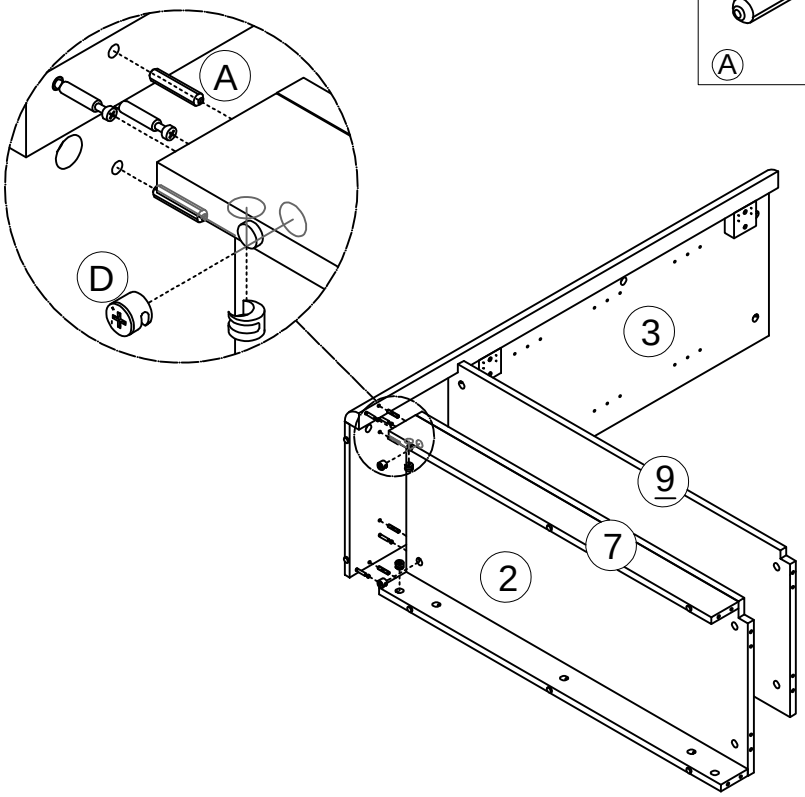

STEP 10

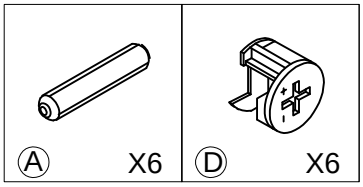

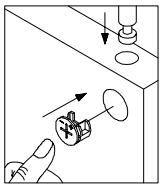

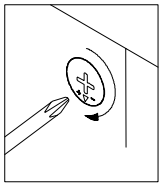

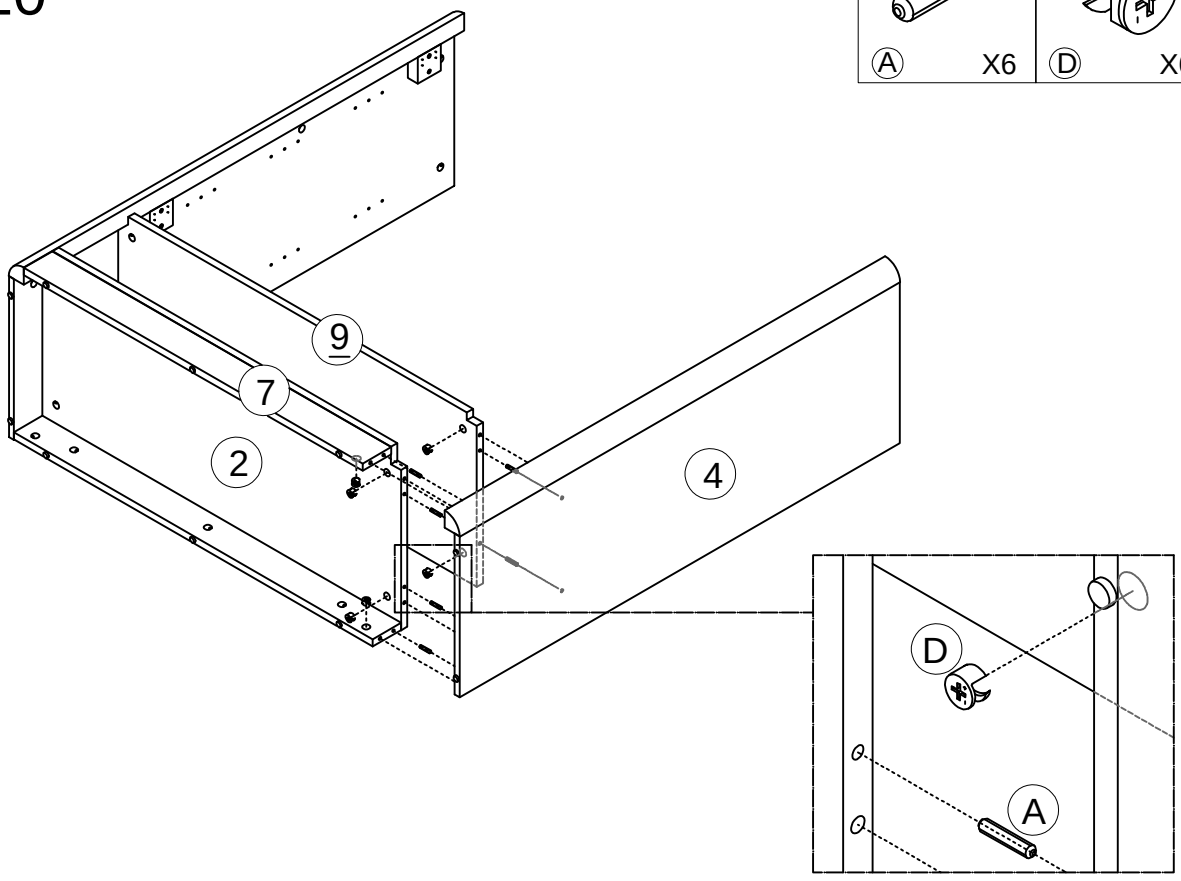

STEP 11

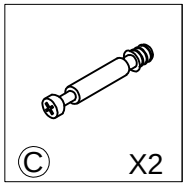

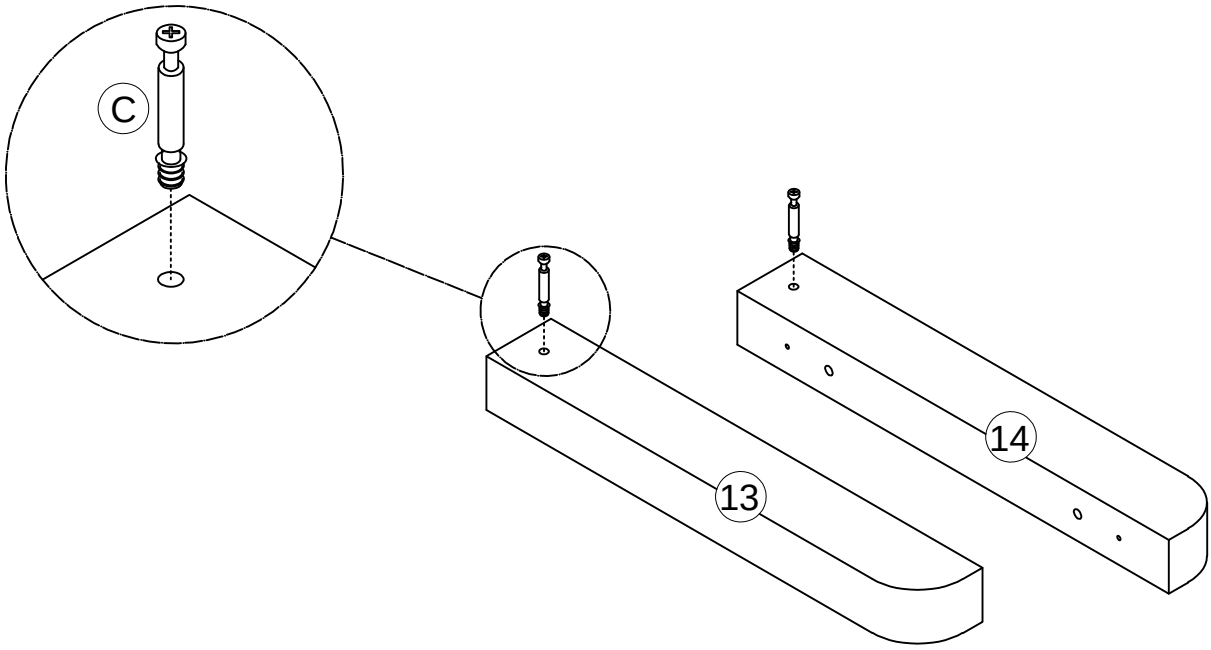

STEP 12

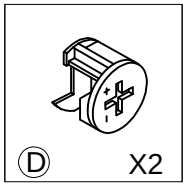

Please ensure that all pre-drilled holes are aligned on the same side.

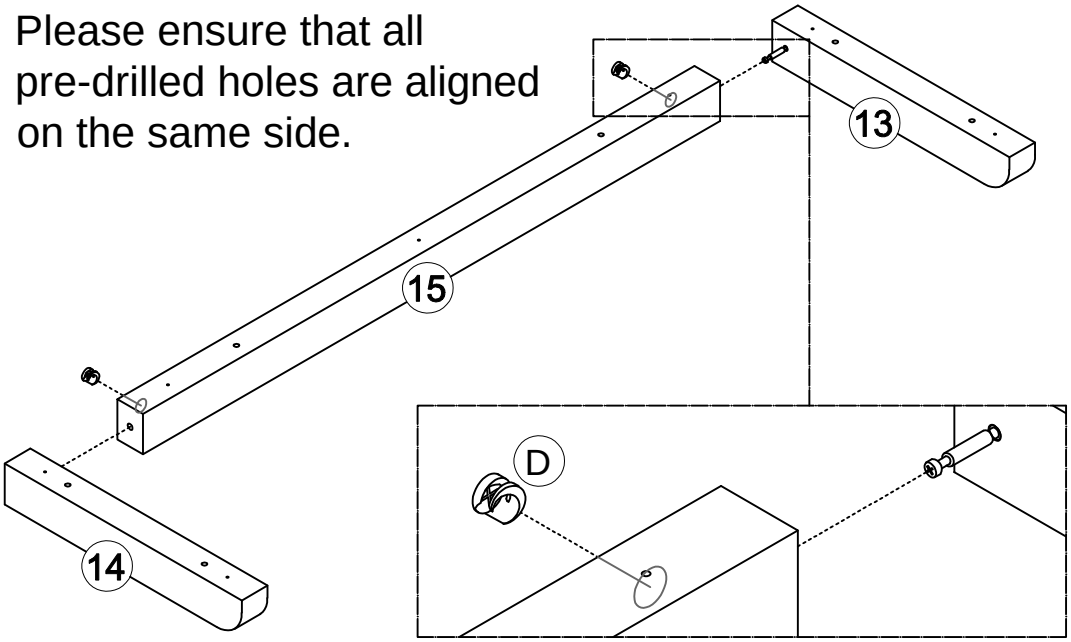

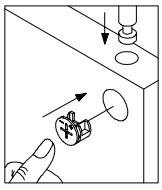

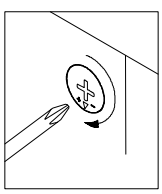

STEP 13

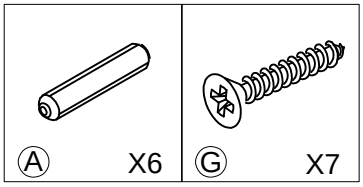

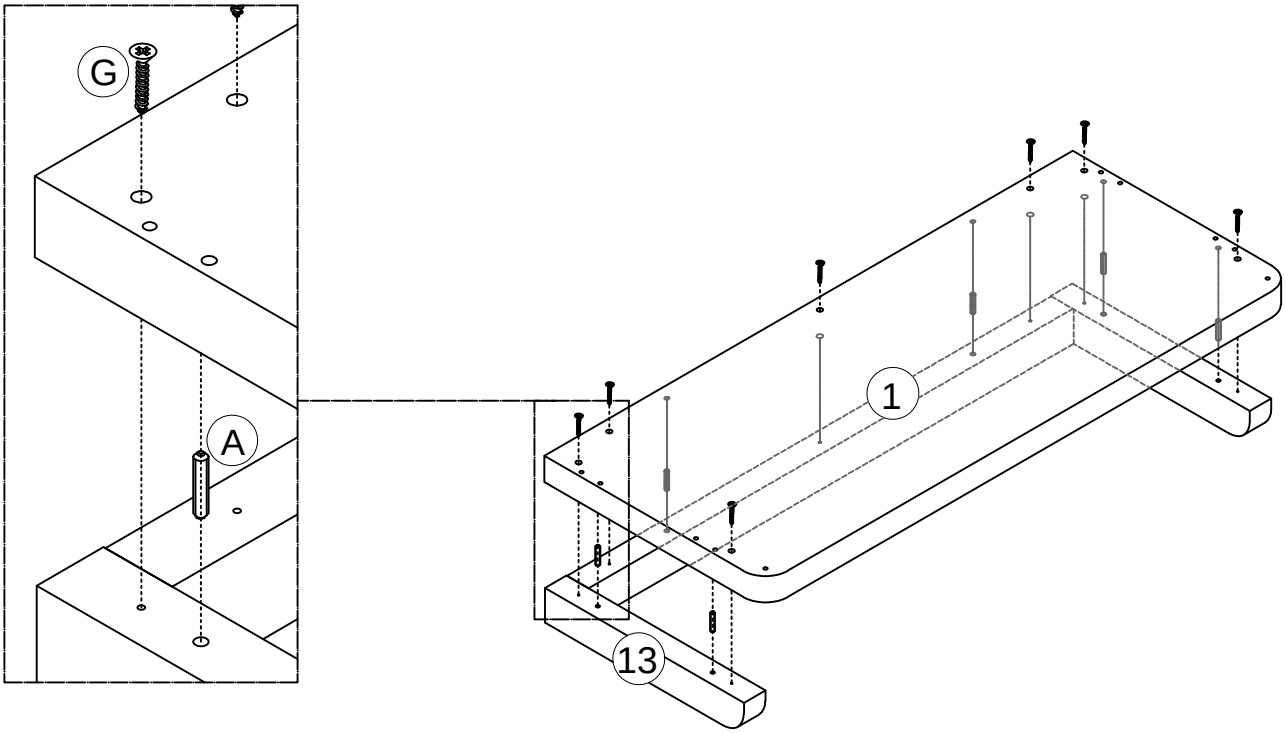

STEP 14

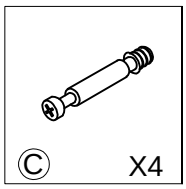

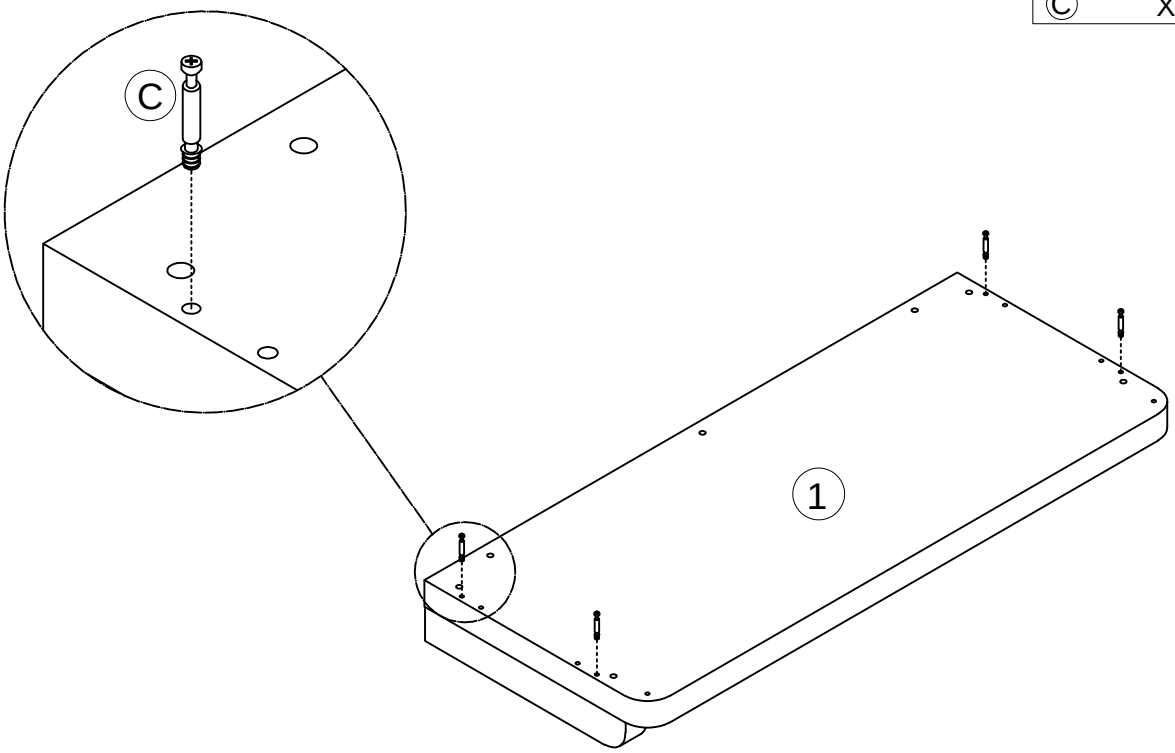

STEP 15

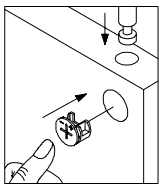

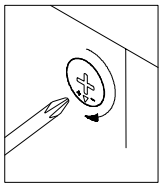

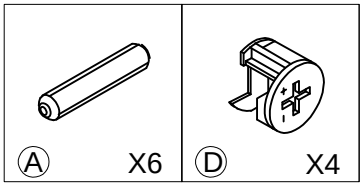

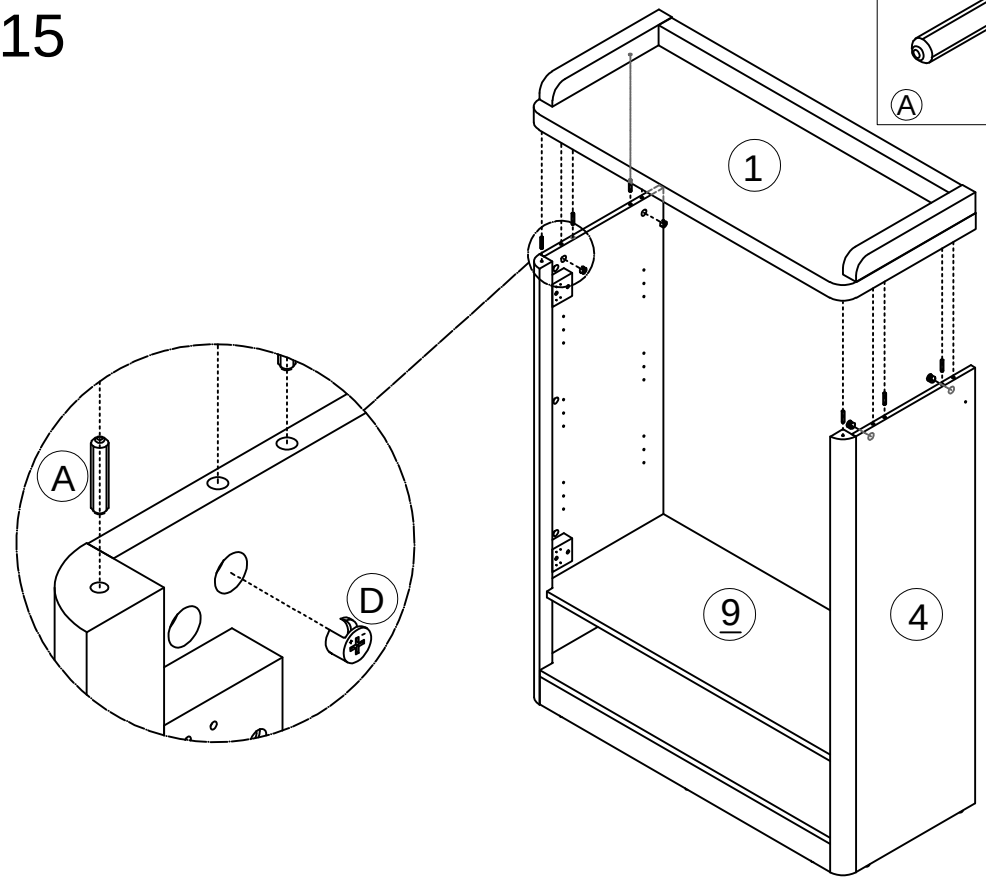

STEP 16

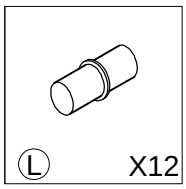

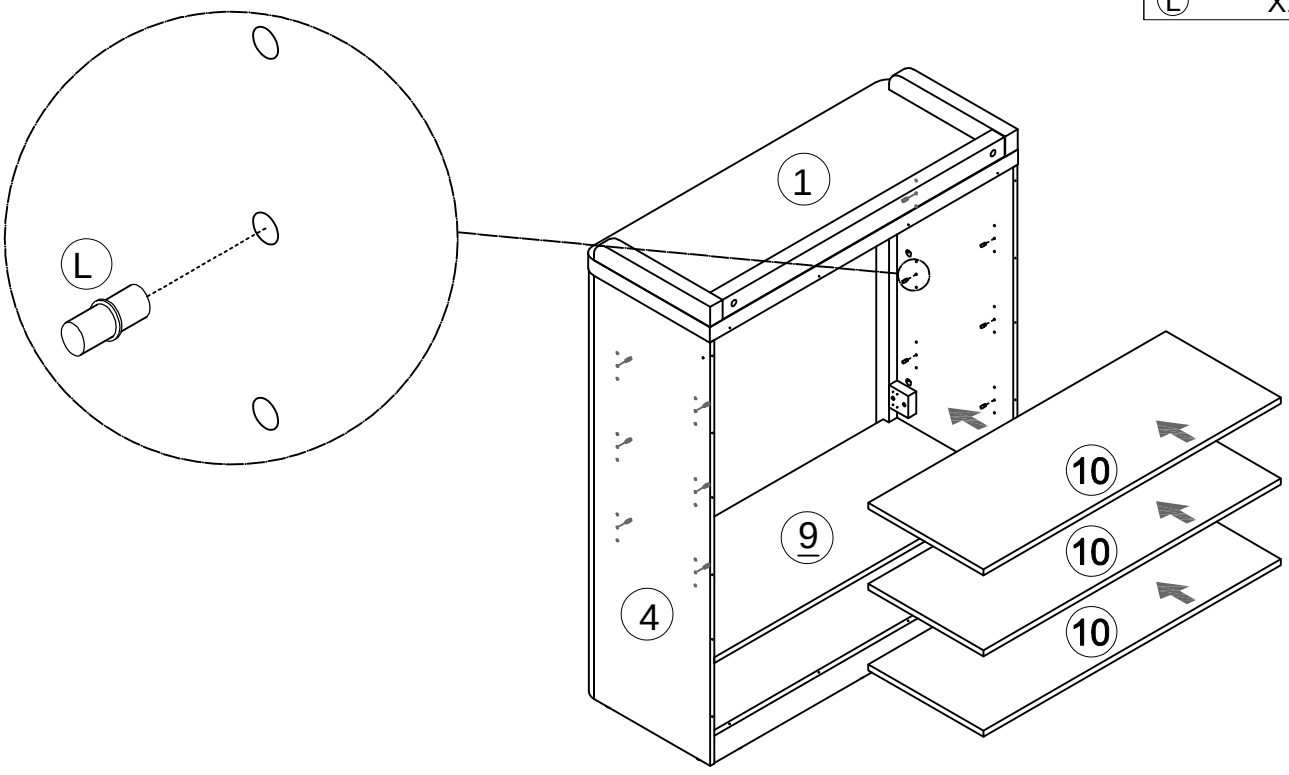

STEP 17

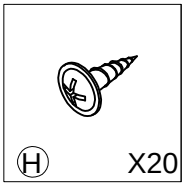

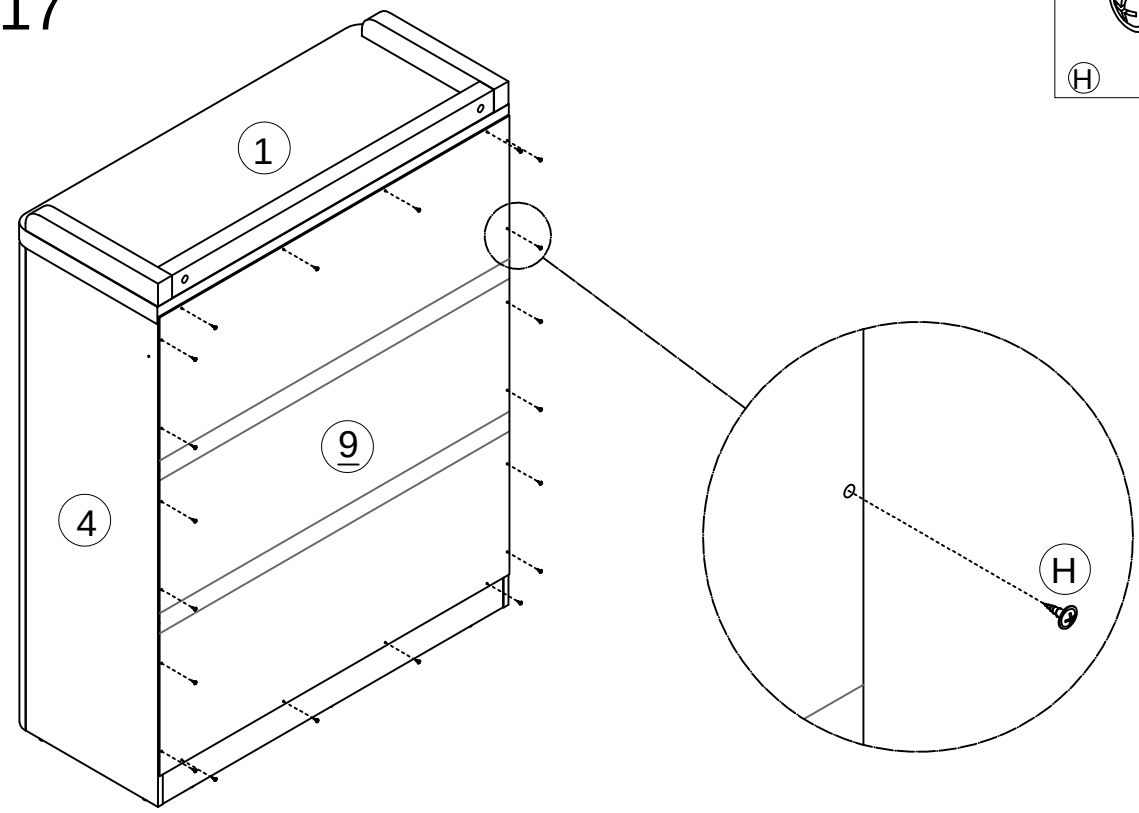

STEP 18

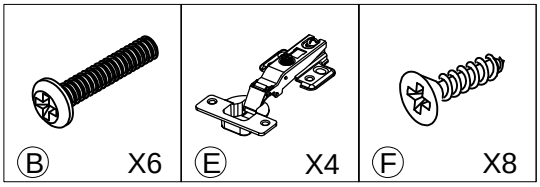

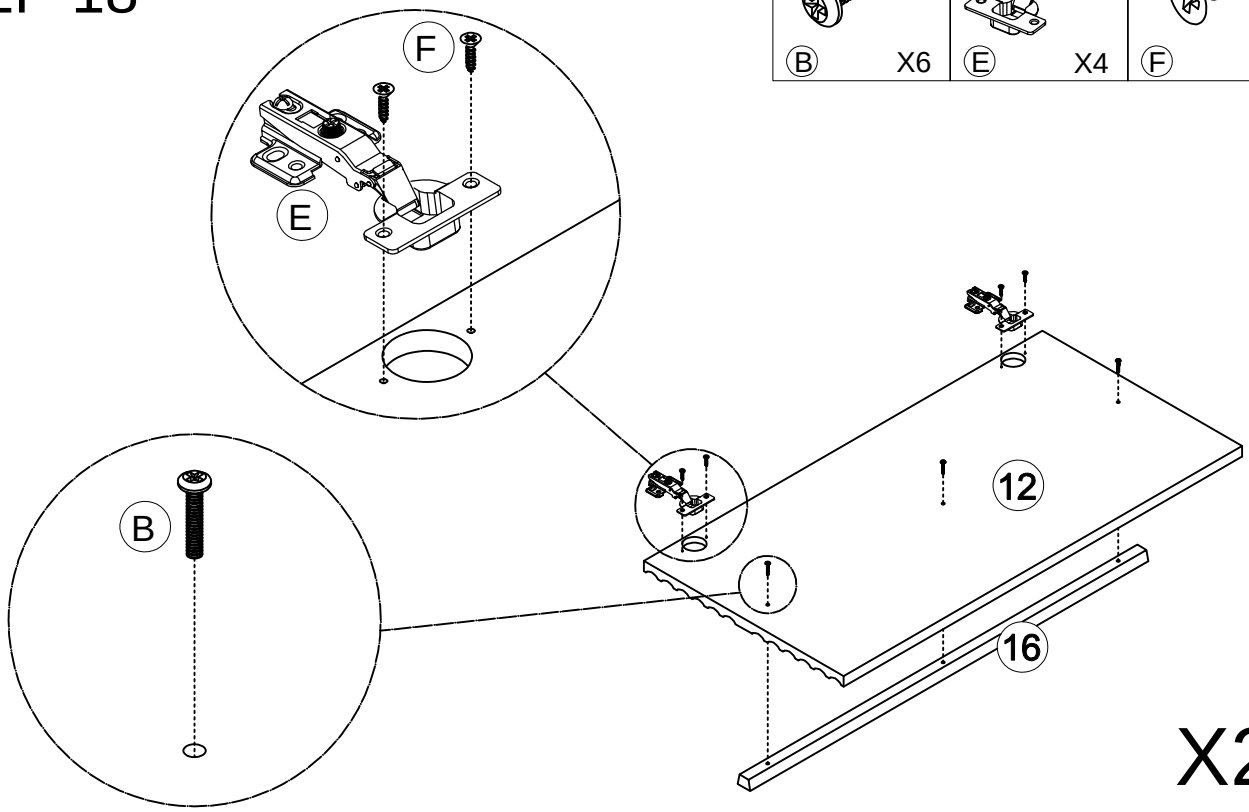

X2

STEP 19

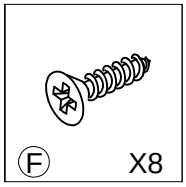

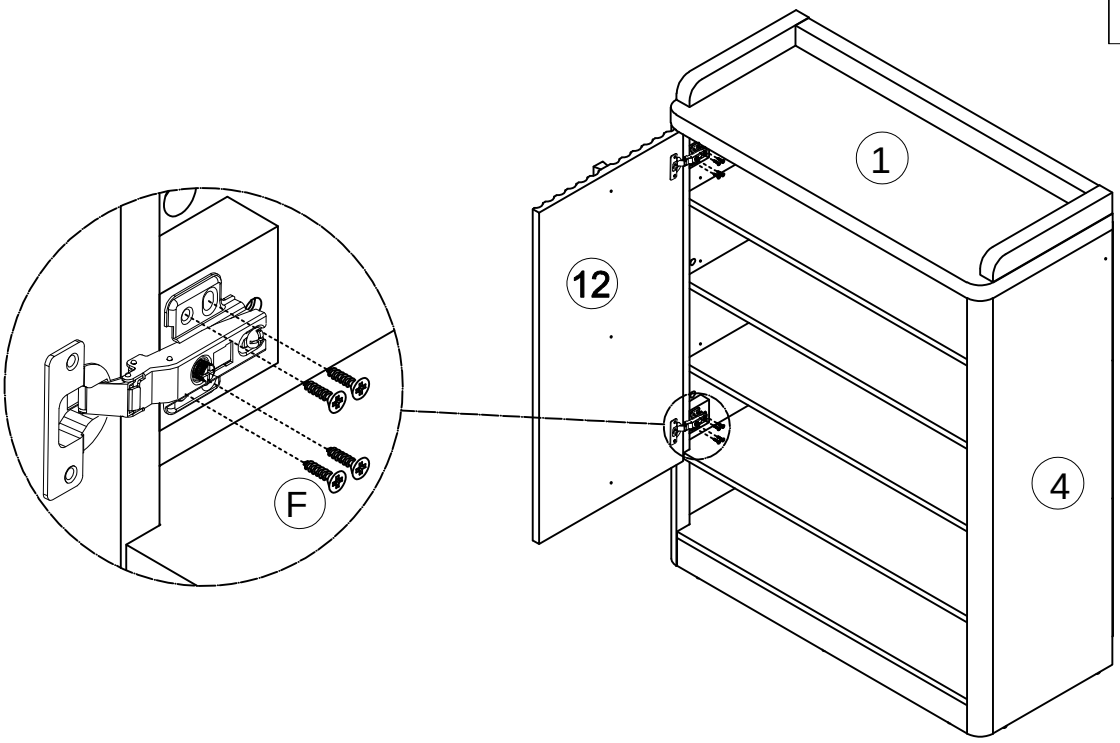

STEP 20

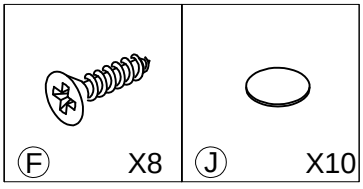

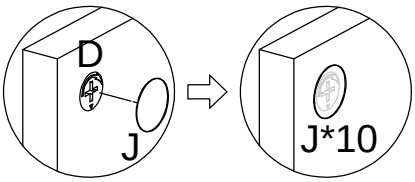

STEP 21 Concealed hinges are three-way adjustable

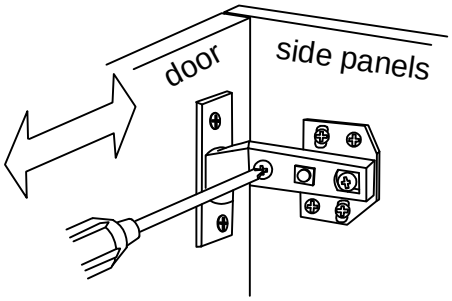

Horizontal

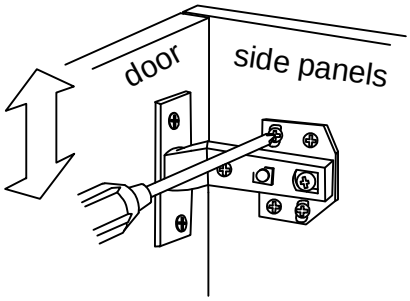

Vertical

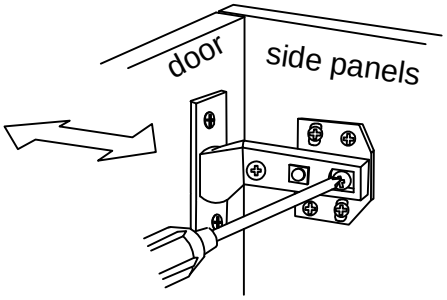

In-and-out

STEP 22 Movable shelf adjustment

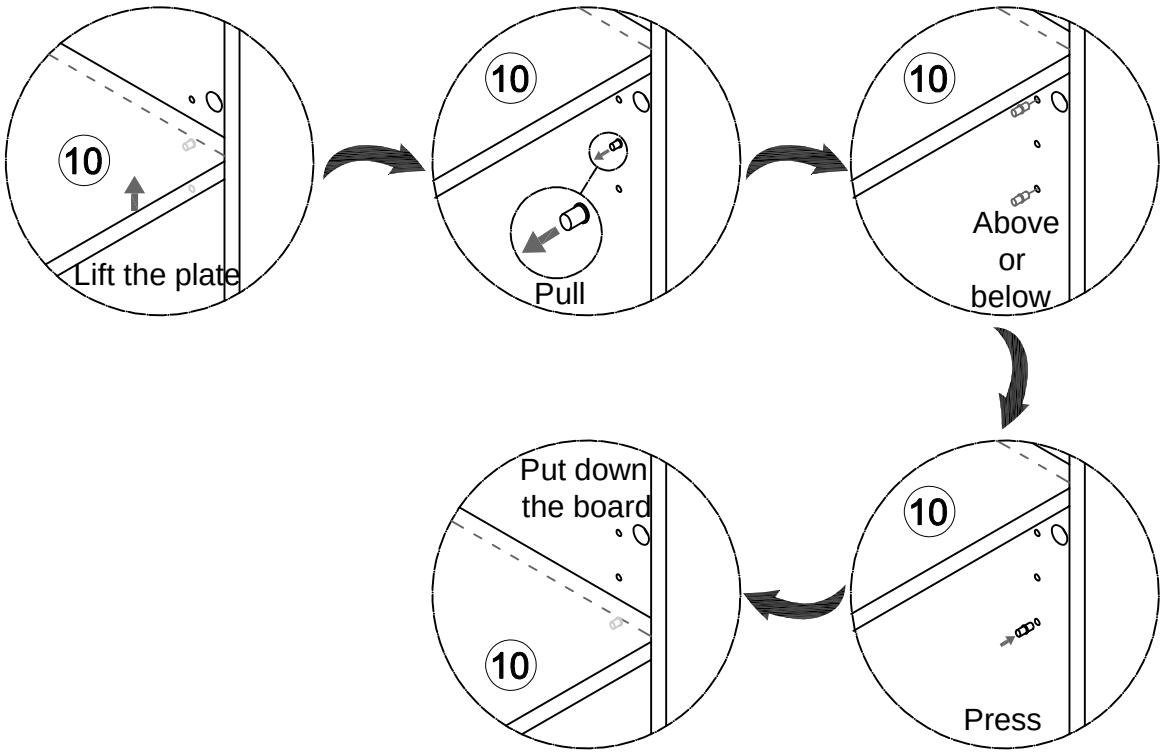

STEP 23

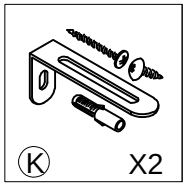

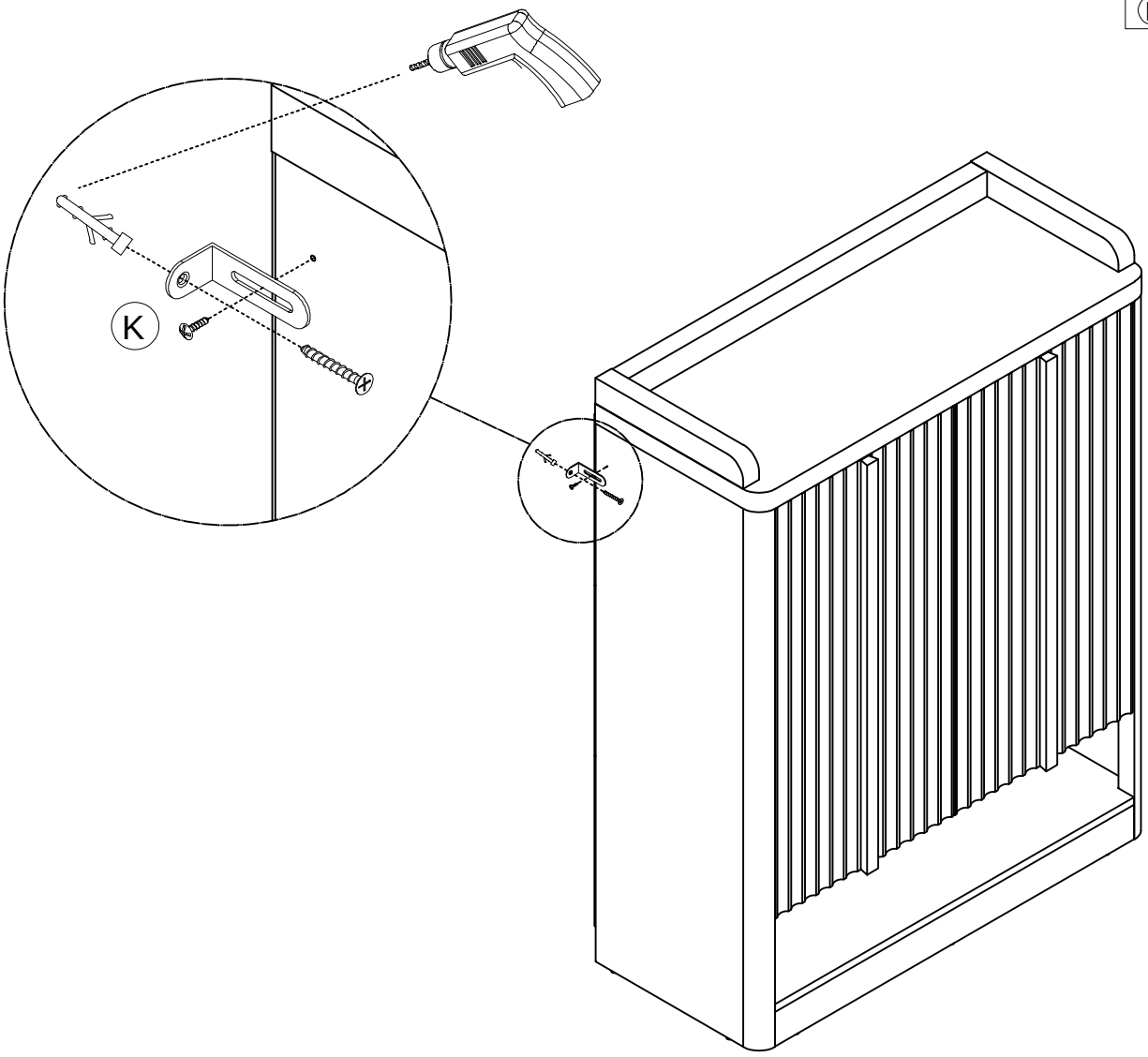

▲ WARNING





Children have died from furnituretipover. To reduce the risk offurniture tipover:

- ALWAYS install anti-tip deviceprovided.
- NEVER put a TV on this product.
- NEVER allow children to stand, climbor hang on any drawers, doors, or shelves.
- NEVER open more than one drawer ata time.
- Place heaviest items in the lowestdrawers.

his is a permanent label.
Do not remove!