MODERN LED VANITY LIGHT

This 4-Light LED Vanity Light features an elegant crystal design with a stylish chrome finish. Fits most US modern bathroom design and decoration.
Modern design is attractive and fashionable. Crystal brings more brilliance to your life, simple and luxurious design, highlights your taste.
Designed to use as a fancy decor for bathroom mirror, dressing table, mirror cabinets, vanity table and art display.

LED FLUSH MOUNT ORDERING INFORMATION:

Size	Dimmable
24"	Y

PACKAGE CONTENTS:

Part	Description	Q-ty
A	Fixture	1
B	Canopy	1
C	Mounting bracket	1
D	Wire nuts	3
E	Outlet box screws	2
F	Mounting Screw	2
G	Screw	2
--	Instruction Sheet	1

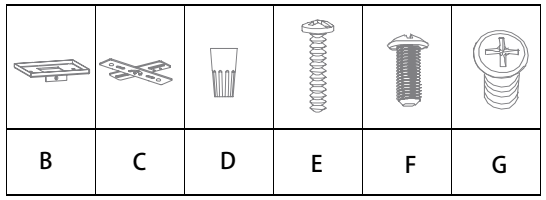

DIMMING COMPATIBLE CONTROLS

MFG	Model Number		MFG	Model Number
Lutron	DSL06	PD-6WCL	Leviton	6672
	TGCL-153P	MACL-153M		6674
	DVCL-153P	CTCL-153P		

⚠ WARNING

RISK OF PERSONAL INJURY-PLESAE READ THESE INSTRUCTIONS CAREFULLY.FOLLOW ALL INSTALLATION INSTRUCTIONS AND OBSERVE ALL WARNINGS.

Make sure the "supply" voltage corresponds to the "rated" product voltage 120V 60Hz
Retain these instructions. Note: If you are an installer ,please give these instructions to the property owner for future reference.

Risk of injury: Always wear the necessary safety equipment to prevent injuries when opening, handling, installing and maintaining this product.

Risk of electrical shock: This product must be installed in accordance with the applicable installion code by a professional familiar with the construction and operation of the product. The professional should also be aware of, and understand the hazards involved with the installation of

Risk of Fire: Always consult with a qualified electrician to ensure the correct branch circuit conductor is utilized.

The Minimum conductor rating requirement is 90 °C (194 °F) in order to be code compliant. We assumes no responsibility for claims arising out of improper or careless installation and handling of this product.

INSTALLATION GUIDE

IMPORTANT SAFETY INFORMATION:

Please read all of the instructions below BEFORE installation

- Make sure the "supply" voltage corresponds to the "rated" product voltage 120V 60Hz
- The product MUST be installed by a qualified electrician in accordance with The National Electrical Code and corresponding local codes.
- If the product is damaged, DO NOT ATTEMPT INSTALLATION AND DO NOT USE!

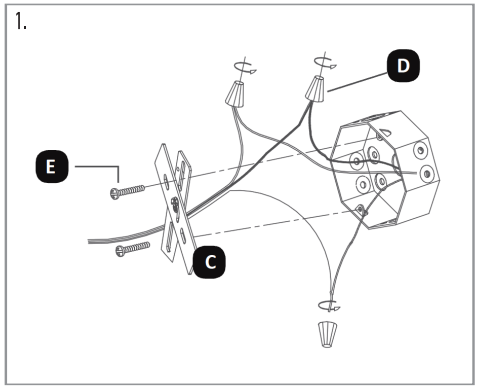

INSTALLATION STEPS

Step1
Requires D,C,E
Place mounting bracket C over the centre of the outlet box.
Align the holes in the mounting bracket C with the holes in the outlet box and attach with the outlet box screws E. Secure the screws with a screwdriver.

Gently pull the wiring down from the outlet box and allow it to hang.
Attach the live (+) wire (usually black) of the vanity fixture to the live (+) wire of the outlet box. Secure them together with a wire connector D, and wrap the connection with electrical tape.

Attach the neutral (-) wire (usually white) of the vanity fixture to the neutral (-) wire of the outlet box. Secure them together with a wire connector D, and wrap the connection with electrical tape.

Attach the ground wire (usually green) of the vanity fixture to the ground wire of the outlet box. Secure them together with a wire connector D, and wrap the connection with electrical tape.

Gently tuck the wire connections neatly into the outlet box and tighten the wire.

Step2
Requires A, B, C, F, G
Push the canopy B over the mounting bracket C until it is aligned with the wall. Align the holes in the canopy B with the holes in the mounting bracket C and attach with the mounting screws F. Align the holes in the vanity fixture A to the holes in the canopy B and attach with the screws G

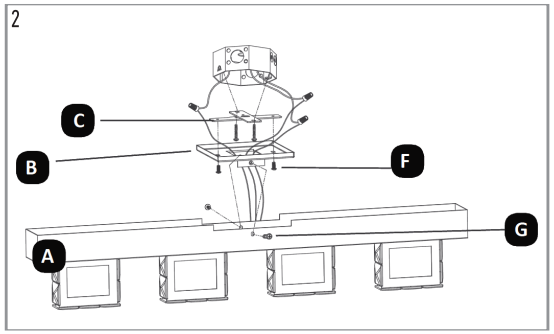

MODERN LED VANITY LIGHT

Q: Does this light flicker when they are dimmed on a dimmer switch?
A: No flicker. It is dimmable. This product is compatible with most common residential type dimmers, dimming performance depends on dimmers.
Recommended Dimmers: Lutron MACL-153M, DVL-153P, SCL-153P,
Leviton IPL06-10Z, 6674-POW

Q: What is the color temperature of this light? cool white? warm white?
A:It's warm white soft light

Q: Is this UL listed ?
A: It's not UL but it is cETL certified. cETL standard is Conforms to UL Std. 1598. Cert. to CSA Std. C22.2 No.250.0

Q: Does this light have a standard bulb socket so that I can easily replace the bulb if I want a different color or wattage?
A: It's not replaceable bulb. it's longlasting LEDs. So it basically will go for a long time. You need to replace the unit it's sealed.

Q: Do these lights come with dimmers?
A: No. An optional dimmer switch is required and not included if you want to dim the light.

Q: Can this be used under an eve outdoors?
A: This fixture is recommended for indoor using only.

Q: Will it work in the bathroom? or where can it be used?
A: Yes, you can install this light fixture in the bathroom. It is waterproof that can be use in damp location. Designed to use as a fancy decor for bathroom mirror, dressing table, mirror cabinets, vanity table and art display.

Q: Will this lamp be very hot when used?
A: No. It's made of durable material with good heating diffusing

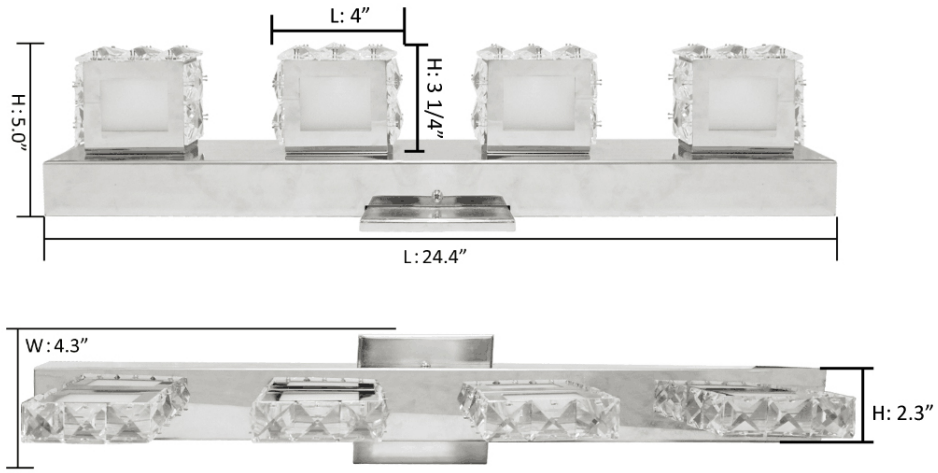

LIMITED ONE YEAR WARRANTY

If within one(1 year from the date of purchase, the product fails due to a defect in material or workmanship,
We will repair or replace it free of charge. We will not be liable for incidental or consequential damages to purchases, or any other party.
For any loss, damage, injury or expense of any kind or nature caused directly or indirectly by the product
or the failure of the product to operate properly.

Warranty service is available by mailing postage prepaid
A valid copy of original invoice and return merchandise authorization (or RMA) are required for all warranty services.