Multifunctional storage
Assembly Instructions

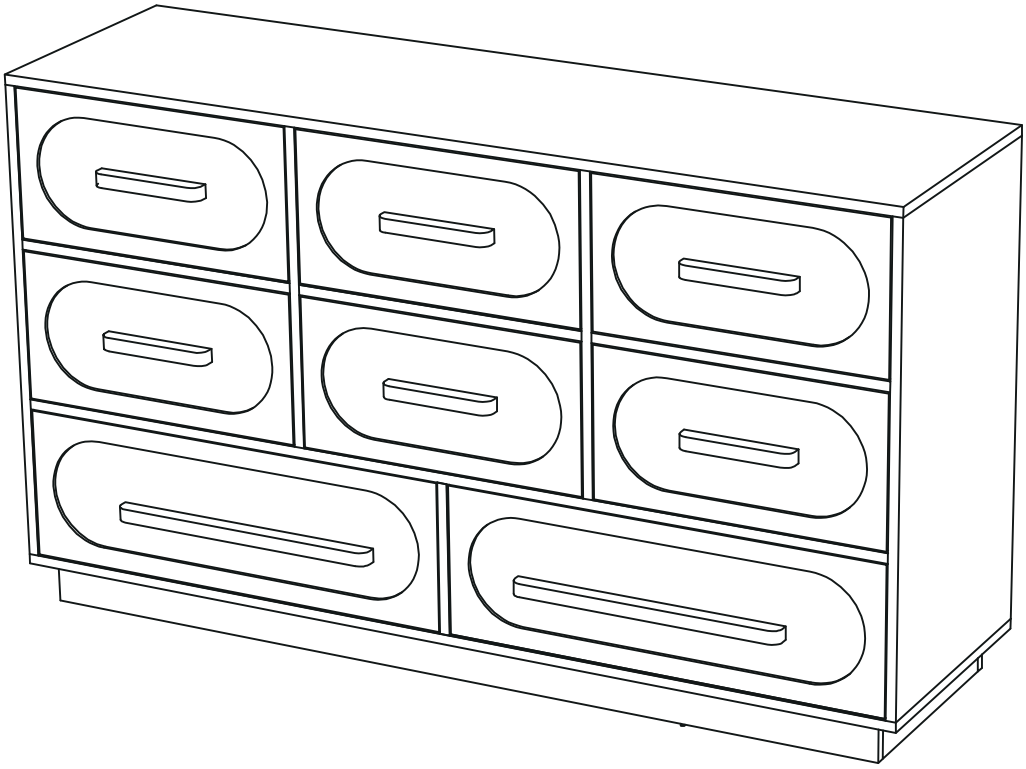

Parts List

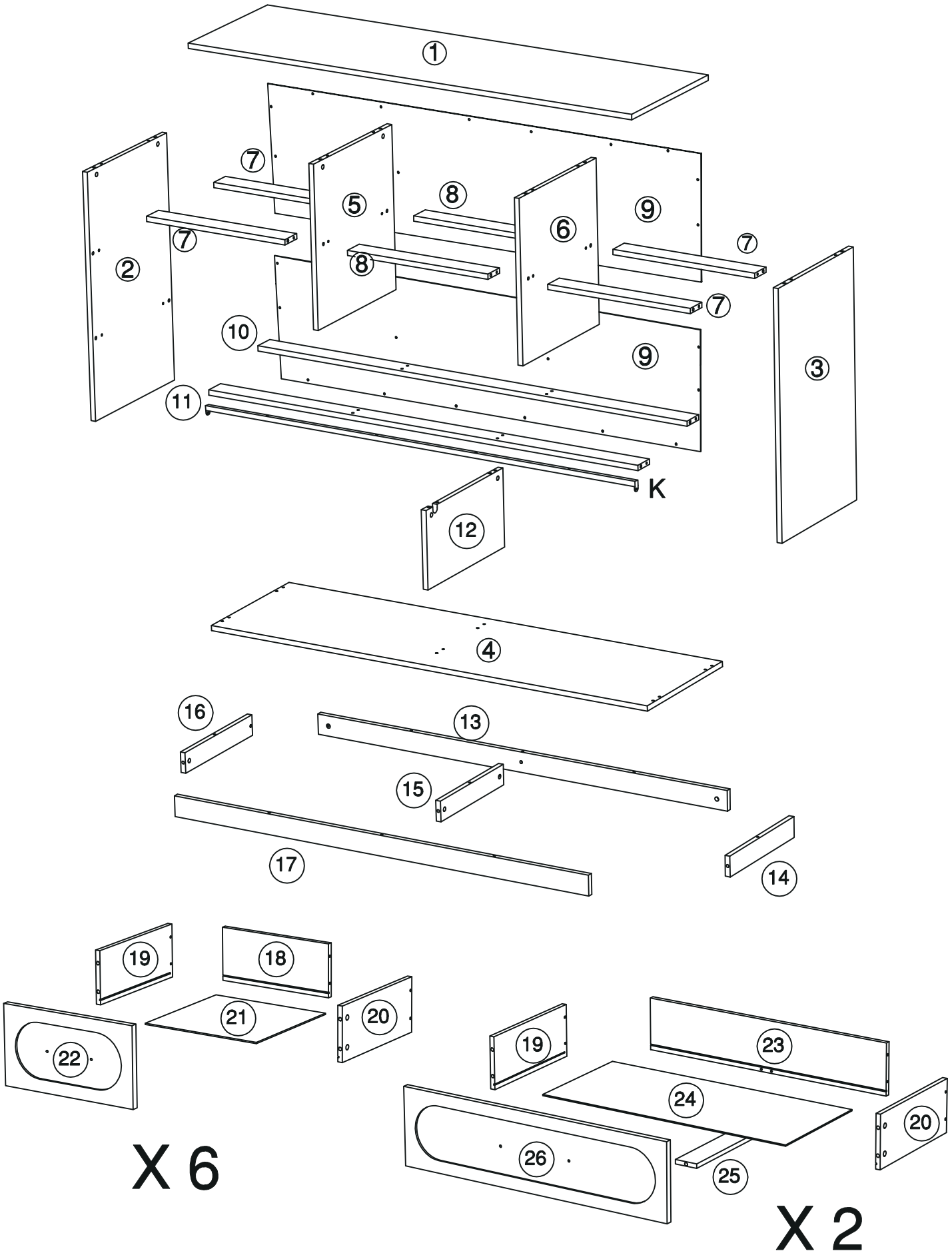
1
7
5
8
9
6
7
2
7
8
7
10
9
3
11
K
12
4
16
13
15
17
14
19
18
21
20
22
X 6
19
23
24
20
26
25
X 2

Hardware

A 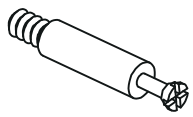 M6×35mm 66+2PCS	B  Ø15×9mm 66+2PCS	C 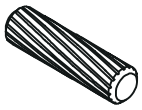 Ø8×30mm 44+2PCS	D 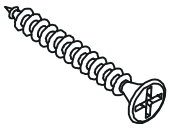 Ø4×38mm 15+1PCS
E  Ø4×30mm 36+2PCS	F  Ø3.5x12mm 96+1PCS	G 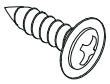 Ø3×12mm 28+1PCS	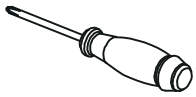 1PC
H 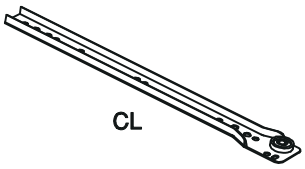 CL 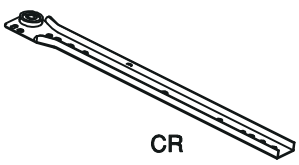 CR 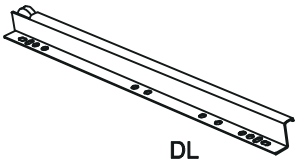 DL 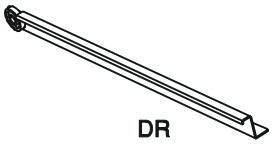 DR L300mm 8SETS			
I 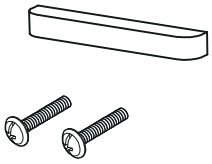 6SETS	J 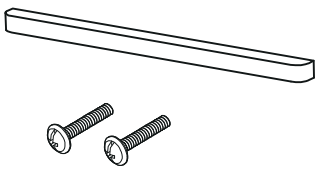 2SETS	K  1PC	
L  SAFETY STRAP KIT 1SET	M 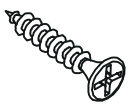 Ø4×25mm 4+1PCS	N 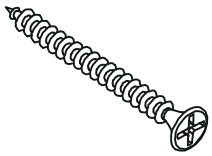 Ø4×45mm 6+1PCS	

ASSEMBLY MATERIAL

Item no.	Reference Image	QTY.
1	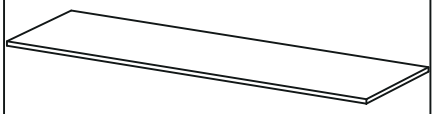	1
2	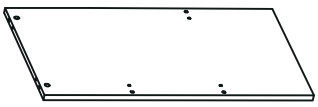	1
3		1
4	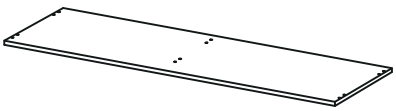	1
5	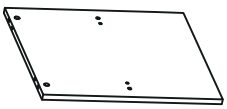	1
6	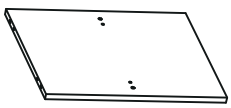	1
7		4
8		2
9	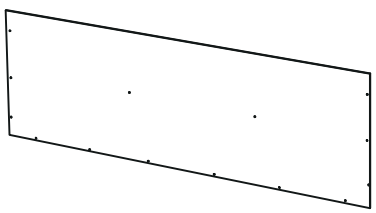	2

Item no.	Reference Image	QTY.
10		1
11	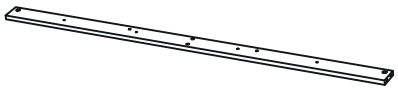	1
12	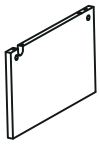	1
13		1
14	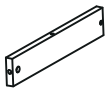	1
15	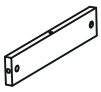	1
16	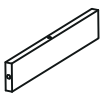	1
17		1
18	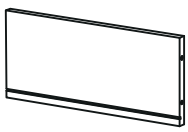	6

ASSEMBLY MATERIAL

Item no.	Reference Image	QTY.
19	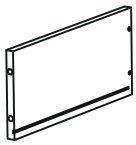	8
20	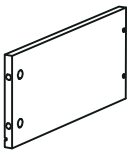	8
21	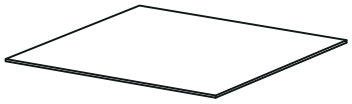	6
22	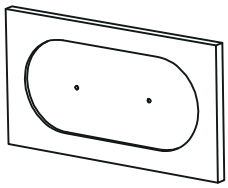	6
23	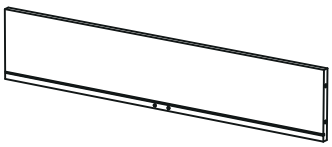	2
24	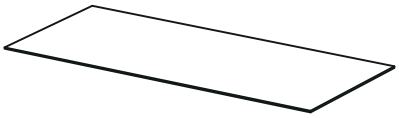	2
25	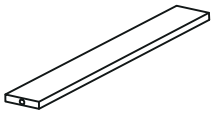	2
26	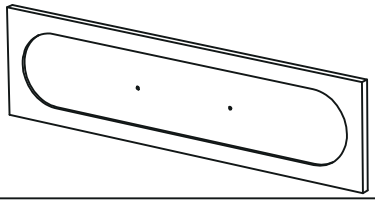	2

How to use the cam lock system

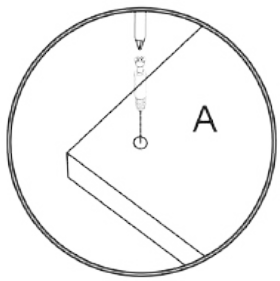

1.Screw cam boit into panel

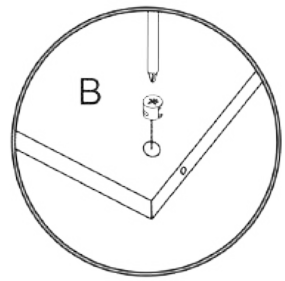

2.Push cam into panel - arrow feature on cam top points to panel edge

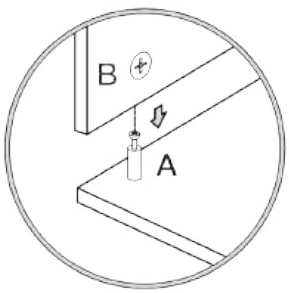

3.Aligu cam bolt(s) with cam(s) and insert all the way into cross-bored hole(s)

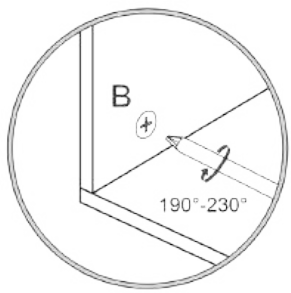

4.Rotate cam(s) clockwise 190°-230° to lock panels together

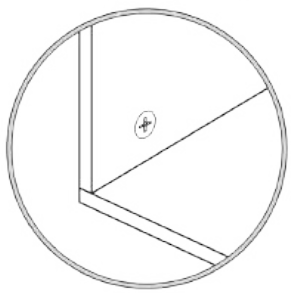

5.Panels should be tight against each other and connection should be rigid

Insert the wood dowel [C] at least half way by tapping lightly with a rubber mallet, IF NECESSARY.

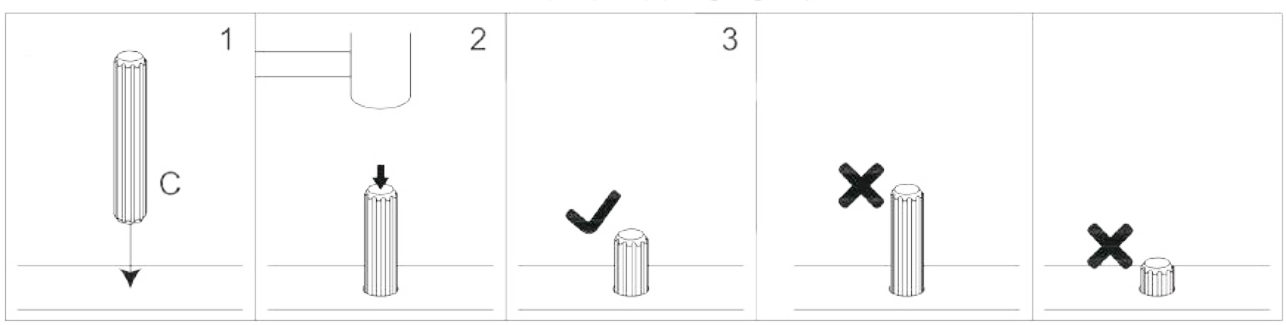

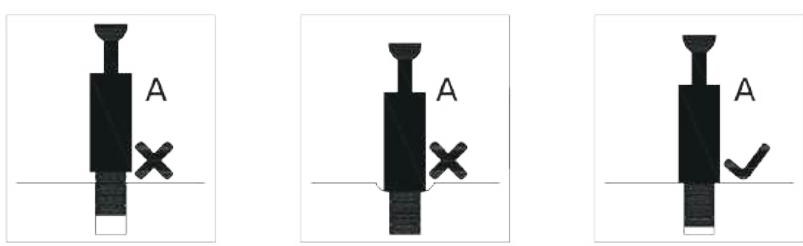

⚠ WARNING

- Unit must be placed on a level surface or leveled with included hardware (when applicable).
- Do not sit or stand on or allow children to climb, sit or stand on the assembled product.
- For safety reasons, it is imperative that this unit be mounted to the wall.
- Do not use without installing the tip restraint.
- Unit can tip over causing severe injury or death.
- Do not exceed the recommended weight limits.
- Evenly distribute the weight on each level and always keep the heavier loads on the bottom.
- Before cutting, drilling or hammering into any wall or floor surface, verify the location of electrical, plumbing and gas lines. Cutting may cause serious injury.

Step 1

F X 24

Ø3.5x12mm

First secure the two screws with pre-drilled holes to ensure the rail is properly positioned.
Then, install the first reinforcement screw (which has no pre-drilled hole) to enhance overall stability.

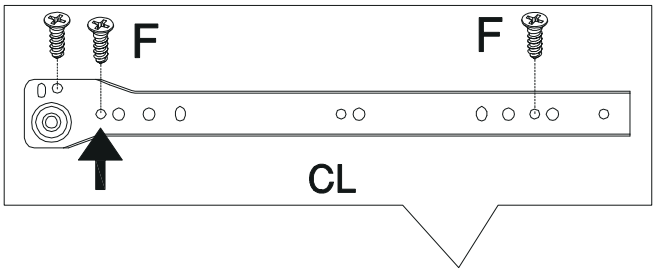

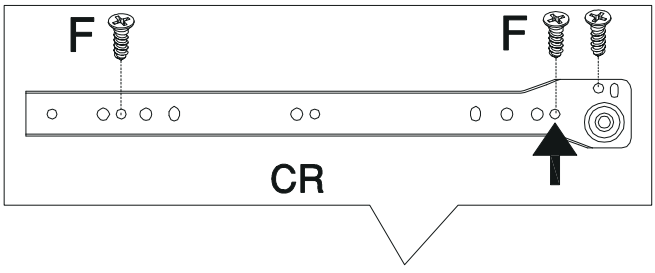

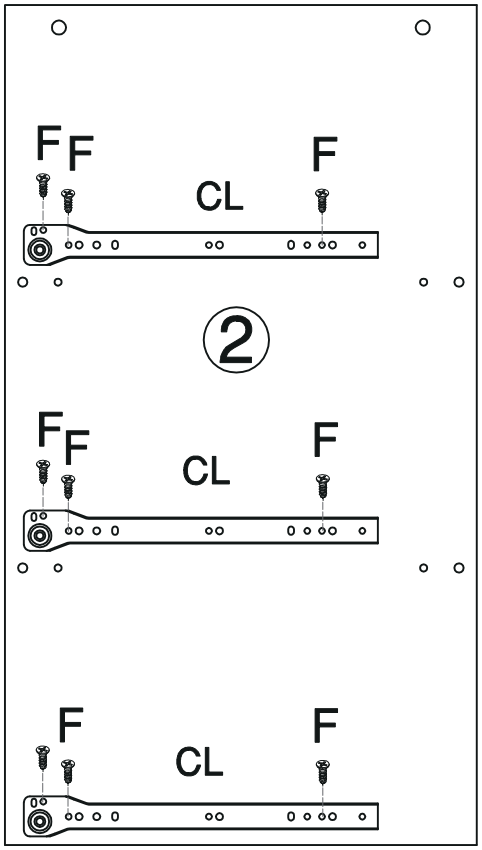

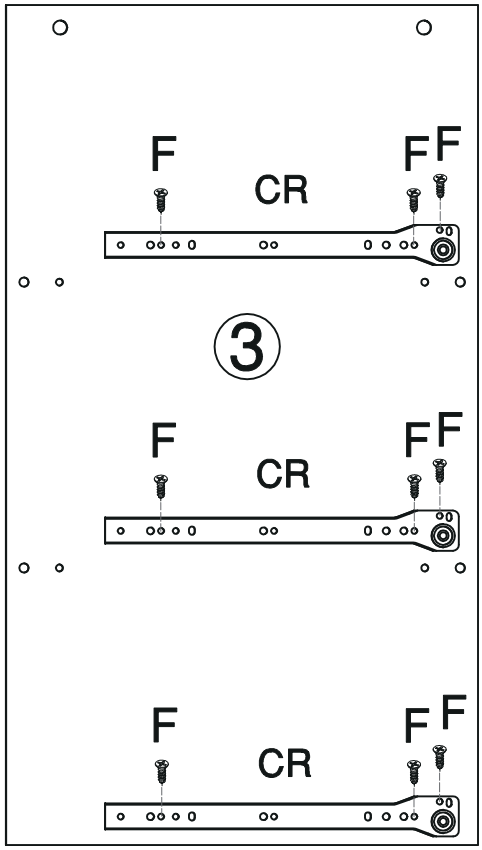

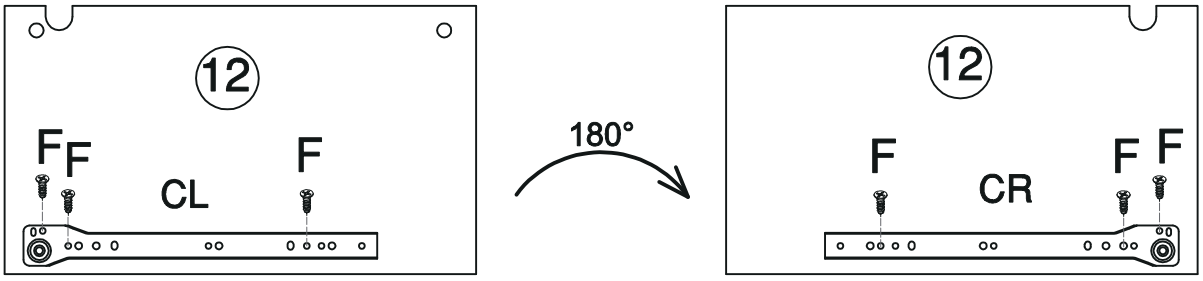

Step 2

F  X 24

Ø3.5x12mm

First secure the two screws with pre-drilled holes to ensure the rail is properly positioned.
Then, install the first reinforcement screw (which has no pre-drilled hole) to enhance overall stability.

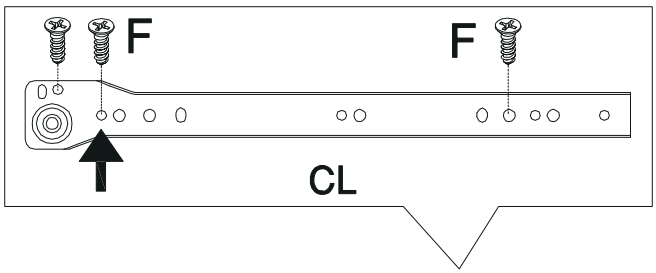

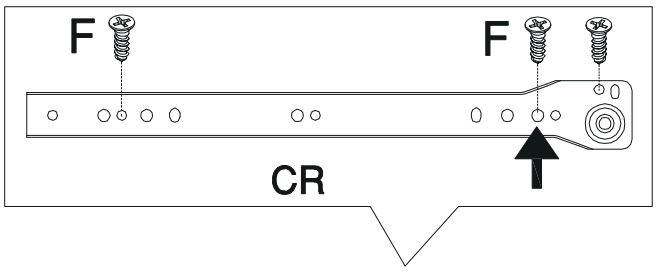

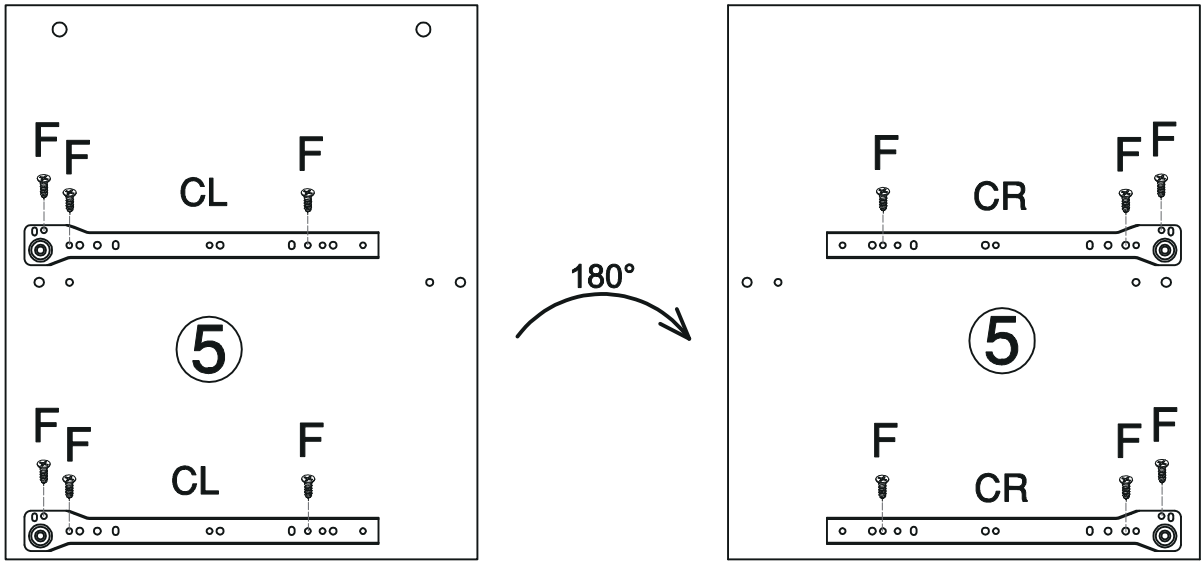

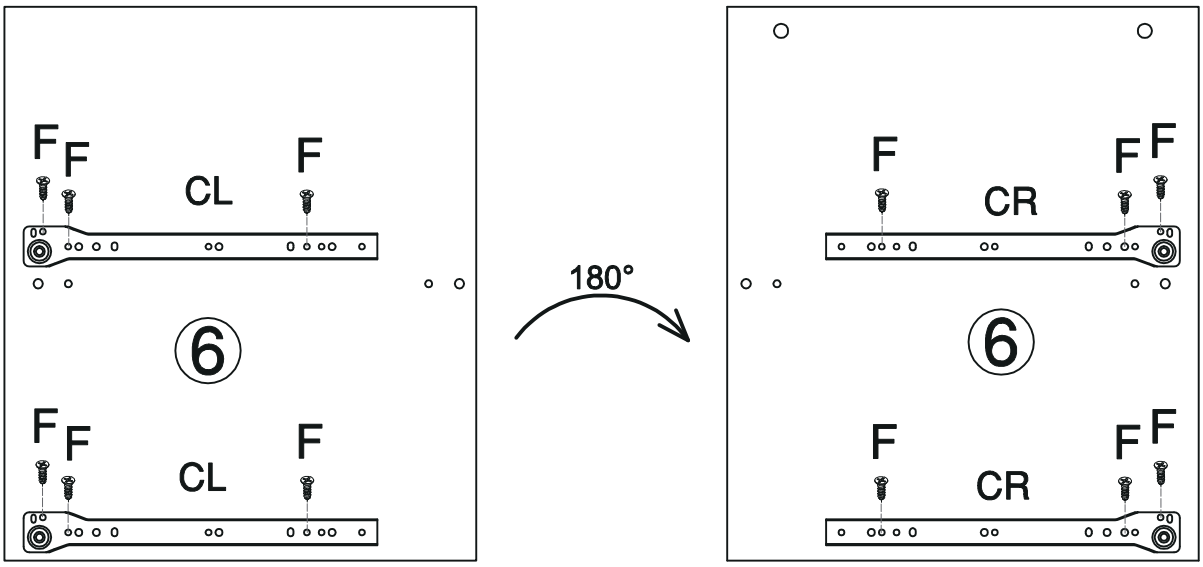

Step 3

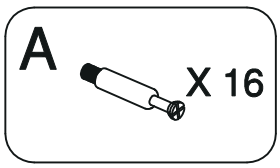

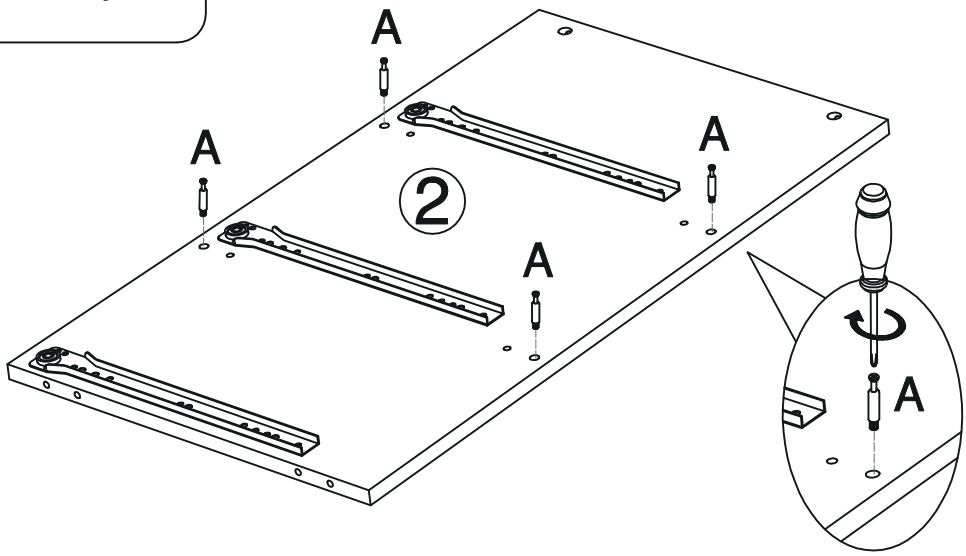

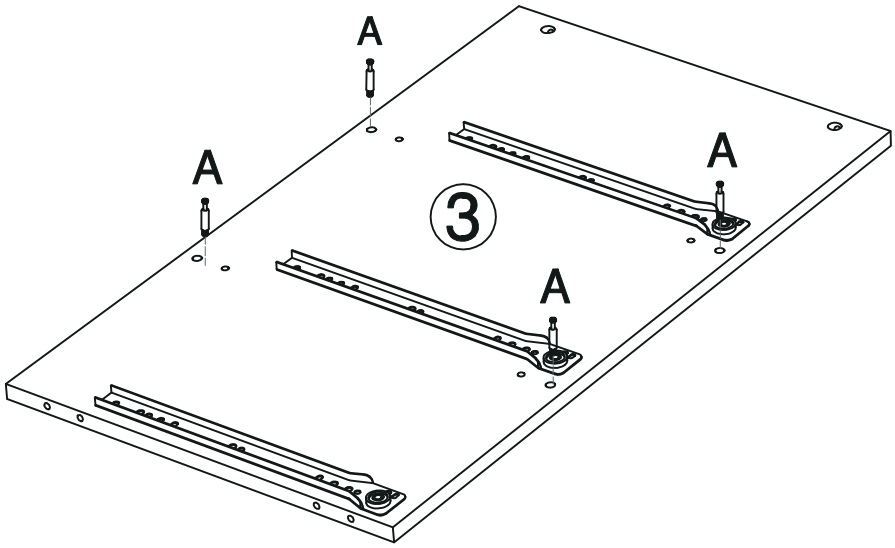

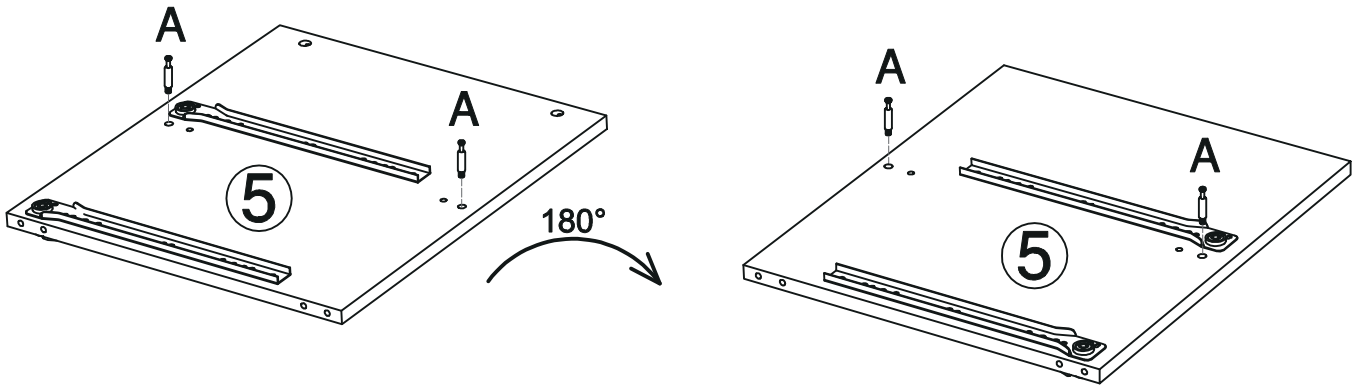

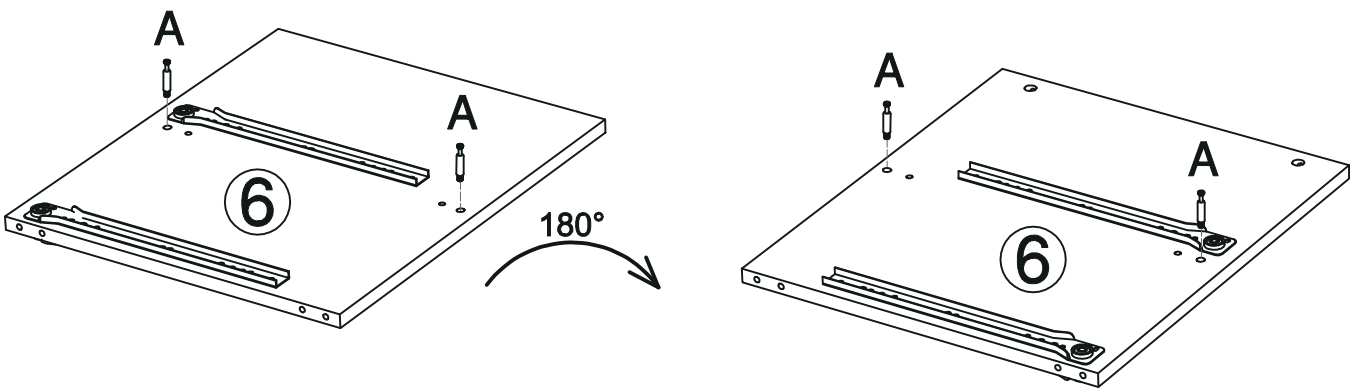

Step 4

A X 8

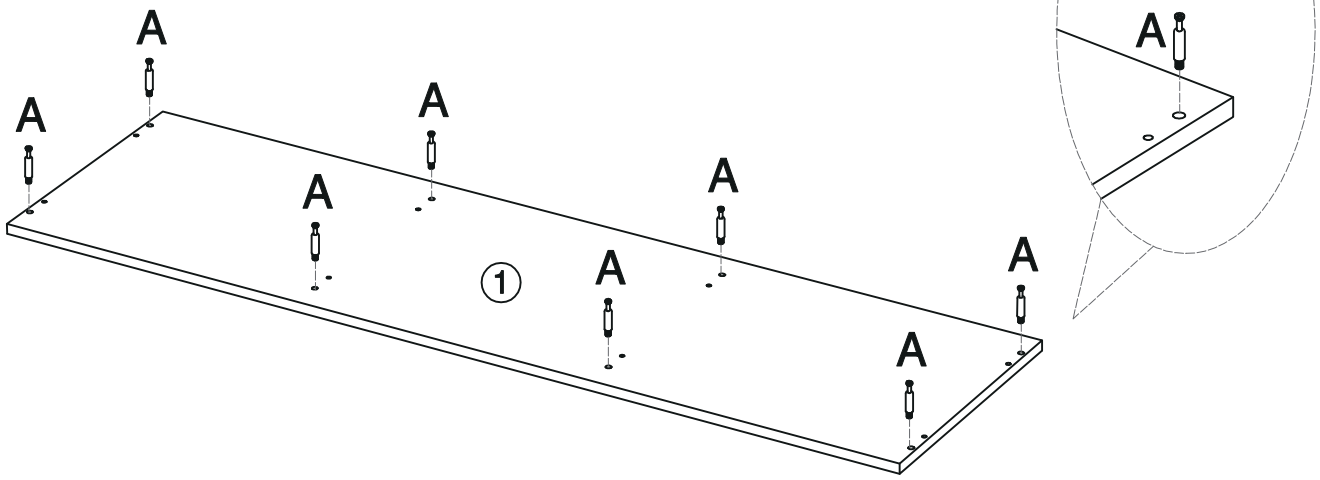

Step 5

M X 4
Ø4×25mm

K X 1

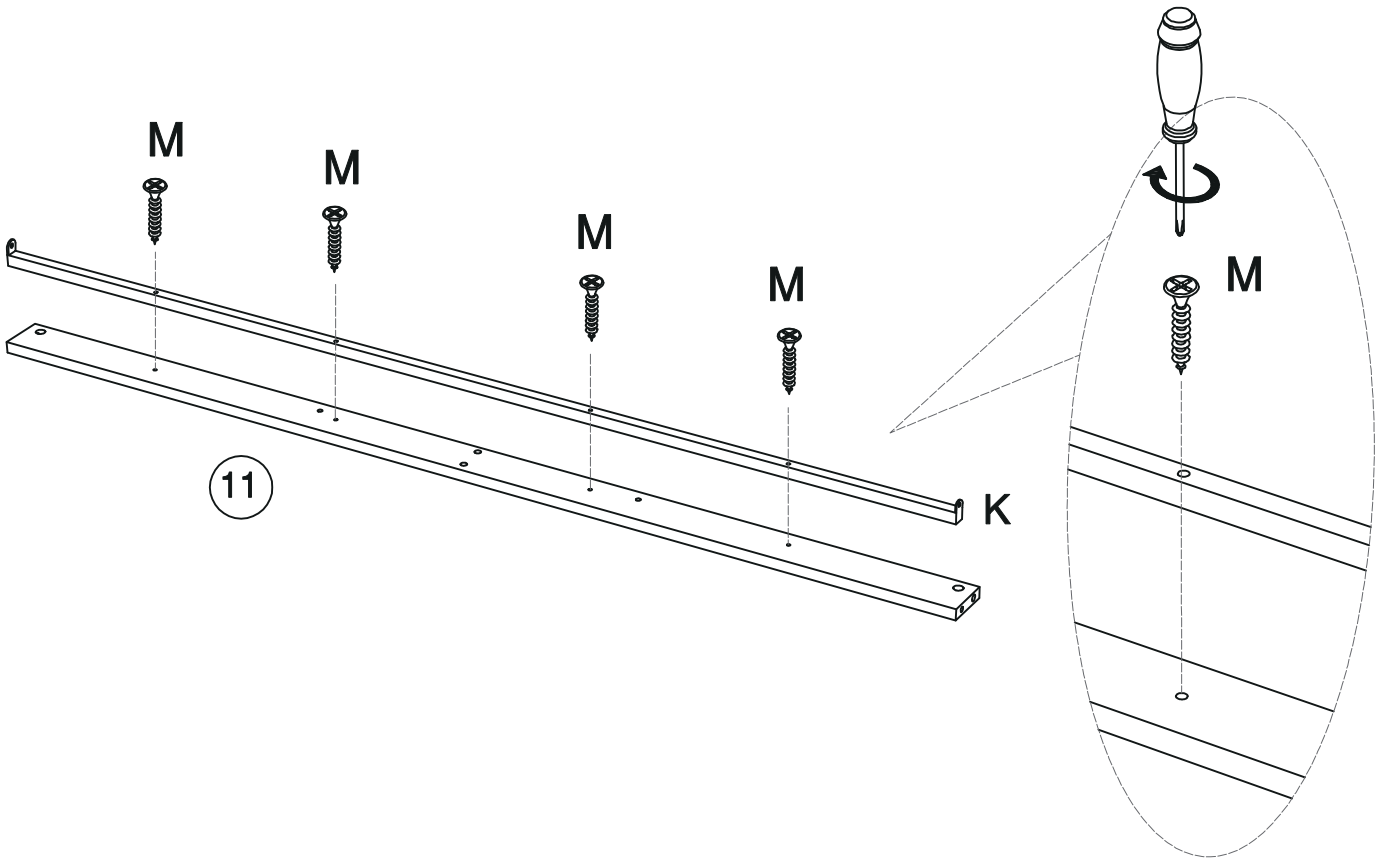

Step 6

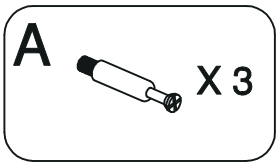
A
X 3

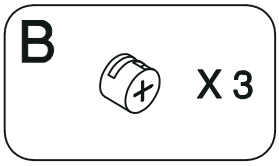
B
X 3

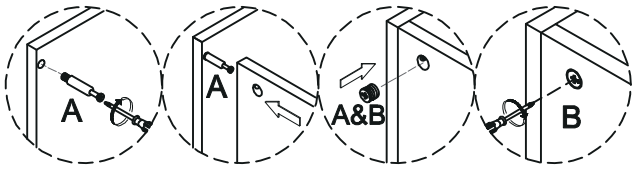
A
A
A&B
B

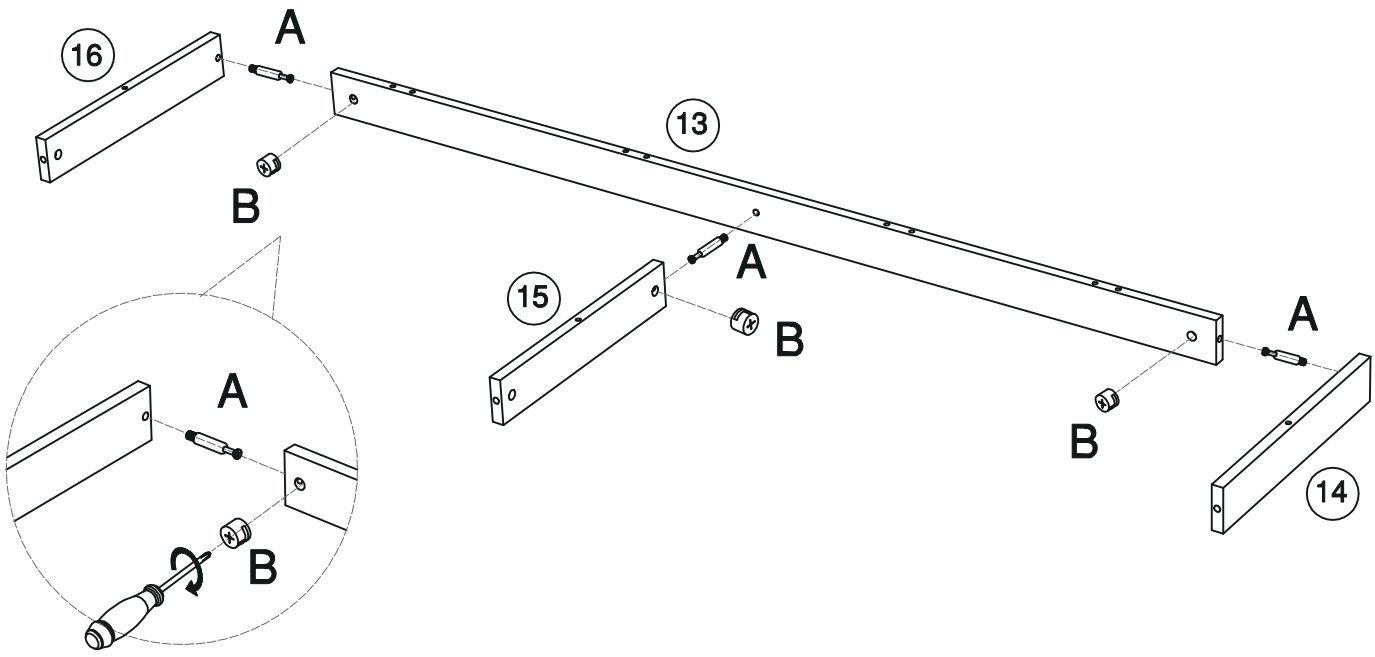
16
A
B
13
A
15
B
A
B
14
A
B

Step 7

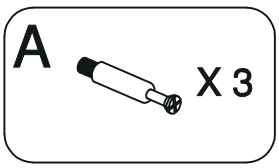
A
X 3

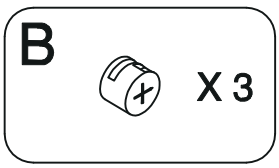
B
X 3

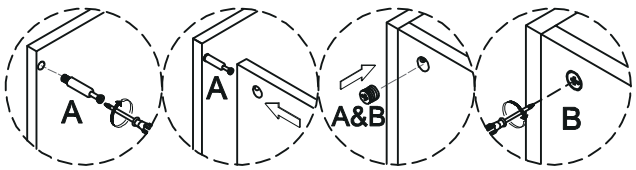
A
A
A&B
B

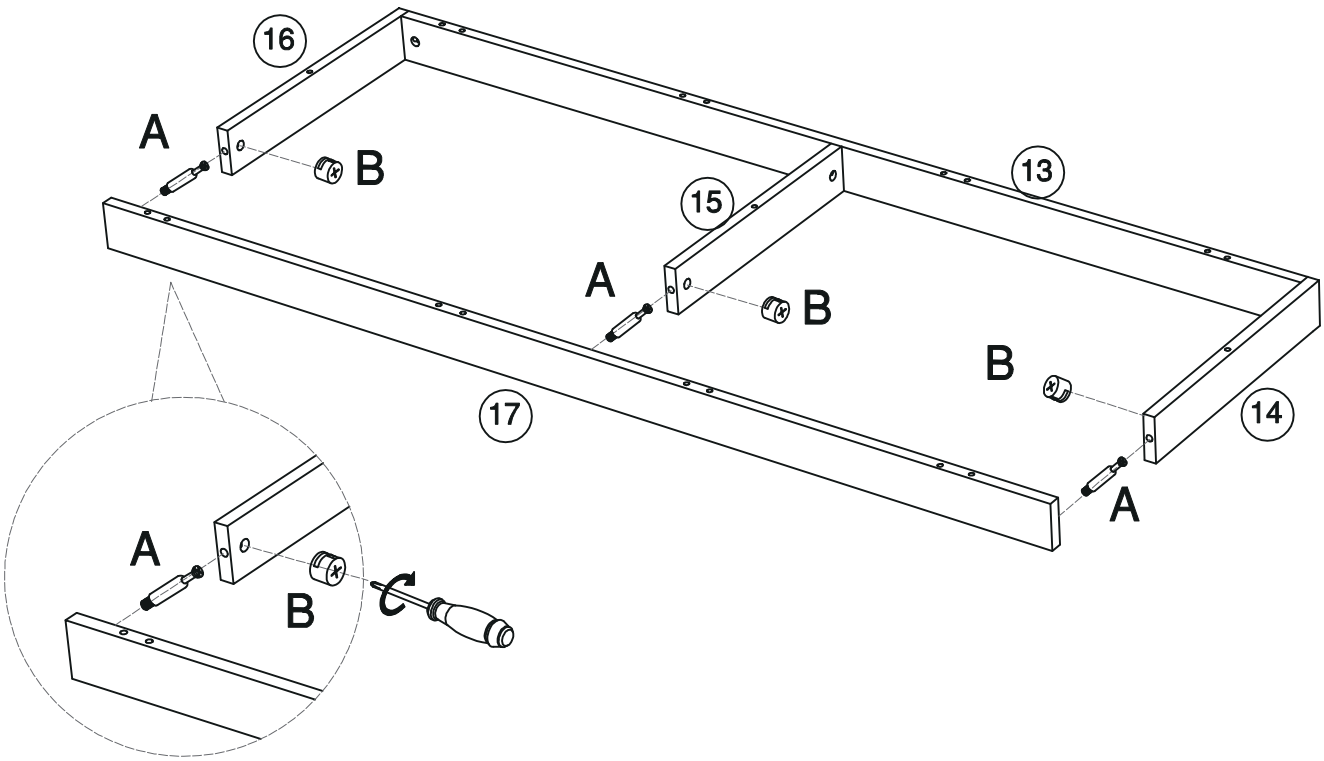
16
A
B
13
15
A
B
B
17
14
A
A
B

Step 8

B X 4

C X 4
Ø8×30mm

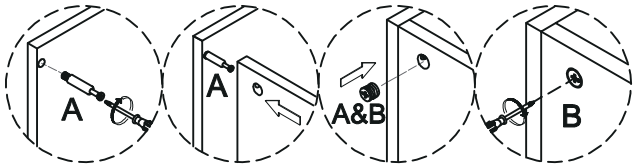

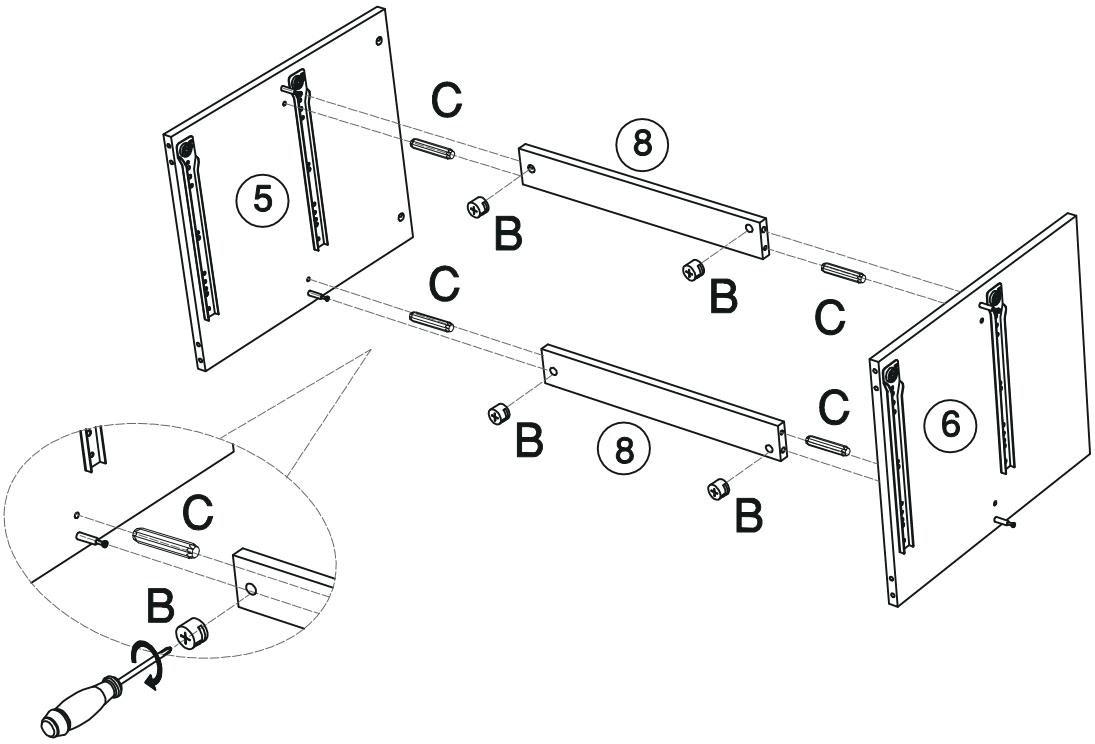

Step 9

B X 4

C X 4
Ø8×30mm

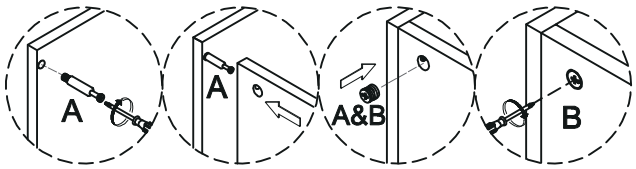

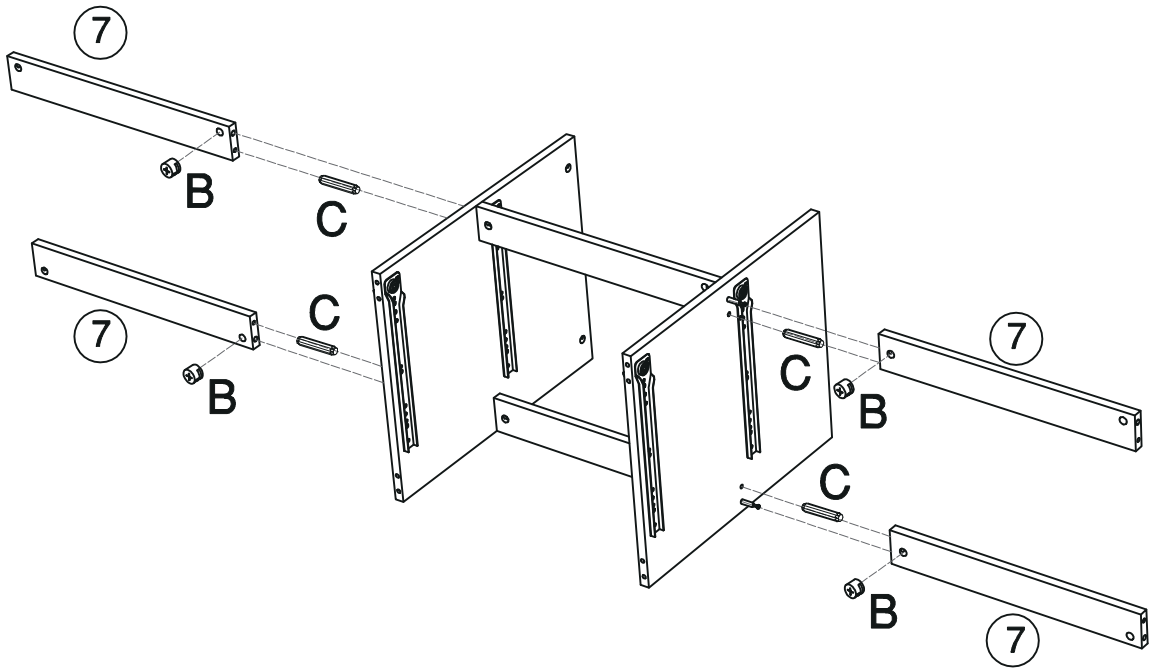

Step 10

C X 4
Ø8×30mm

D X 4
Ø4×38mm

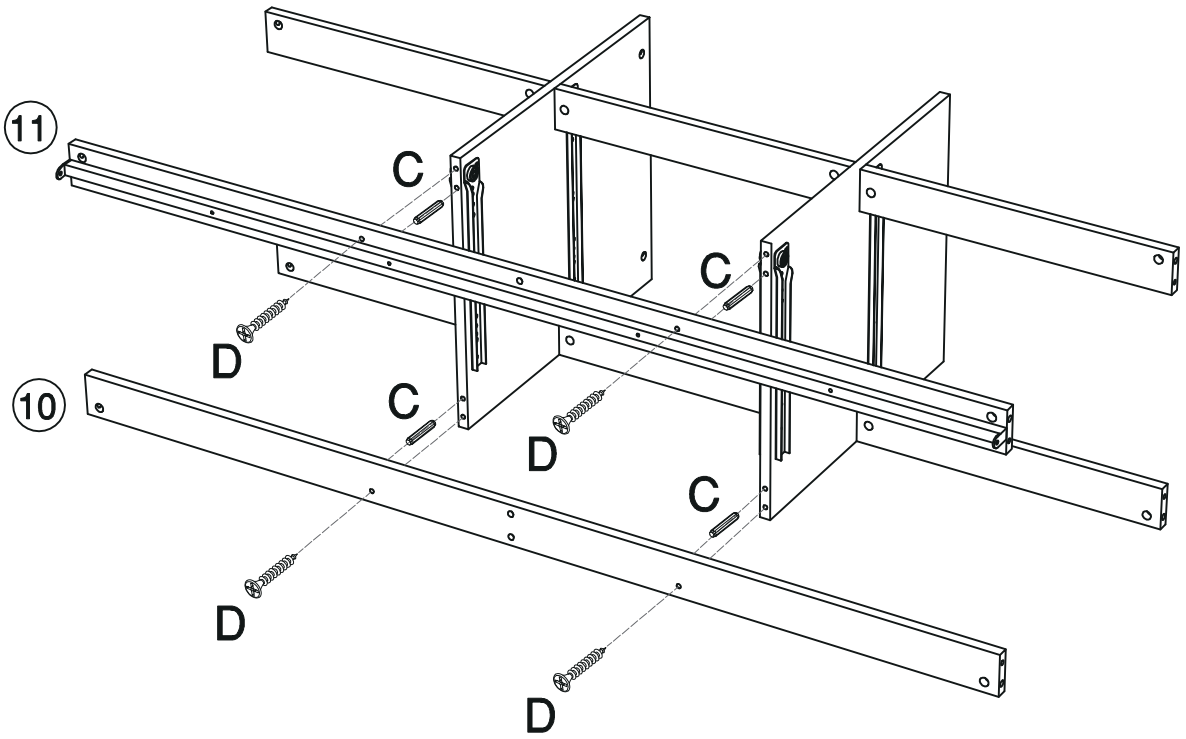

Step 11

A X 2

B X 2

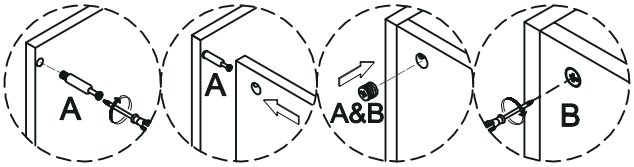

C X 2
Ø8×30mm

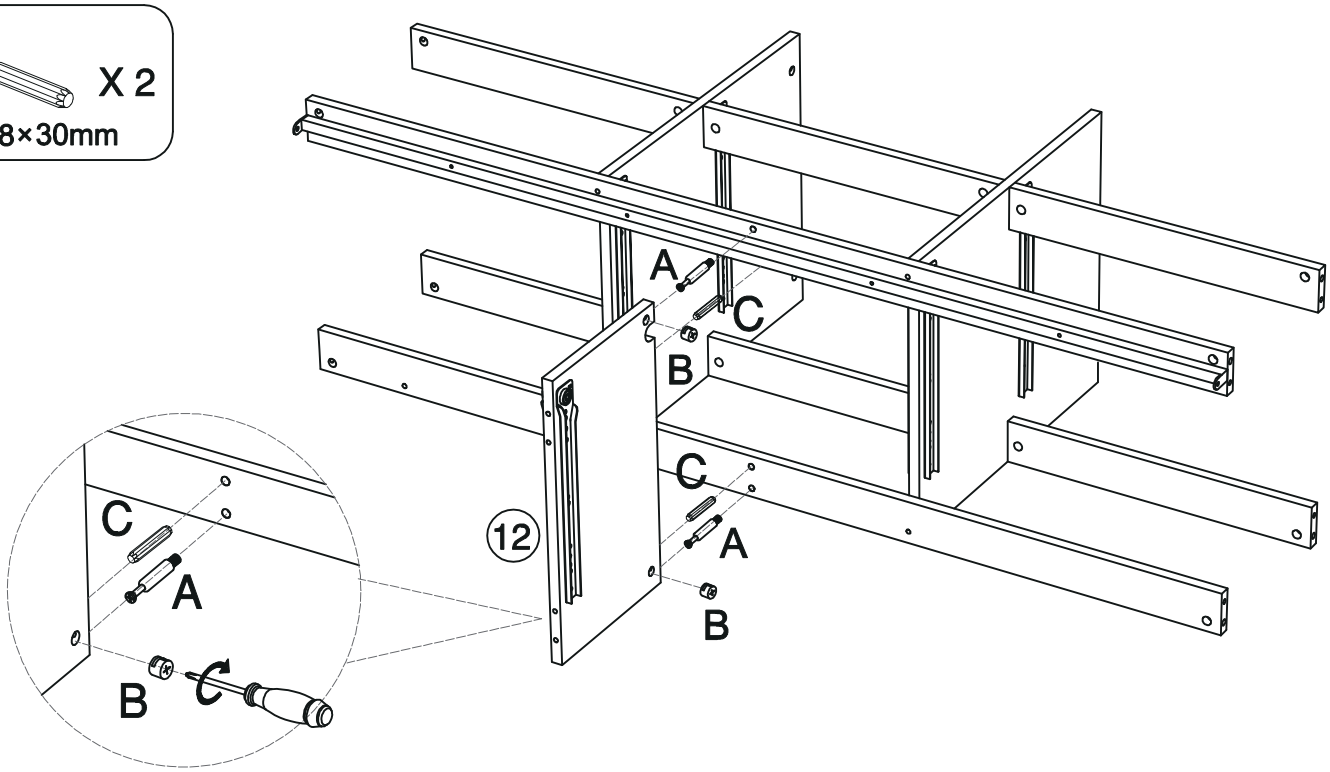

Step 12

B X 4

C X 4 Ø8×30mm

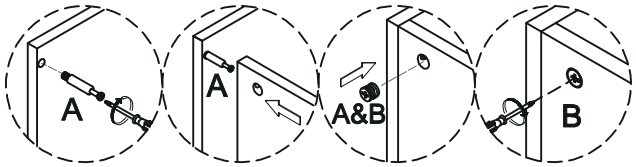

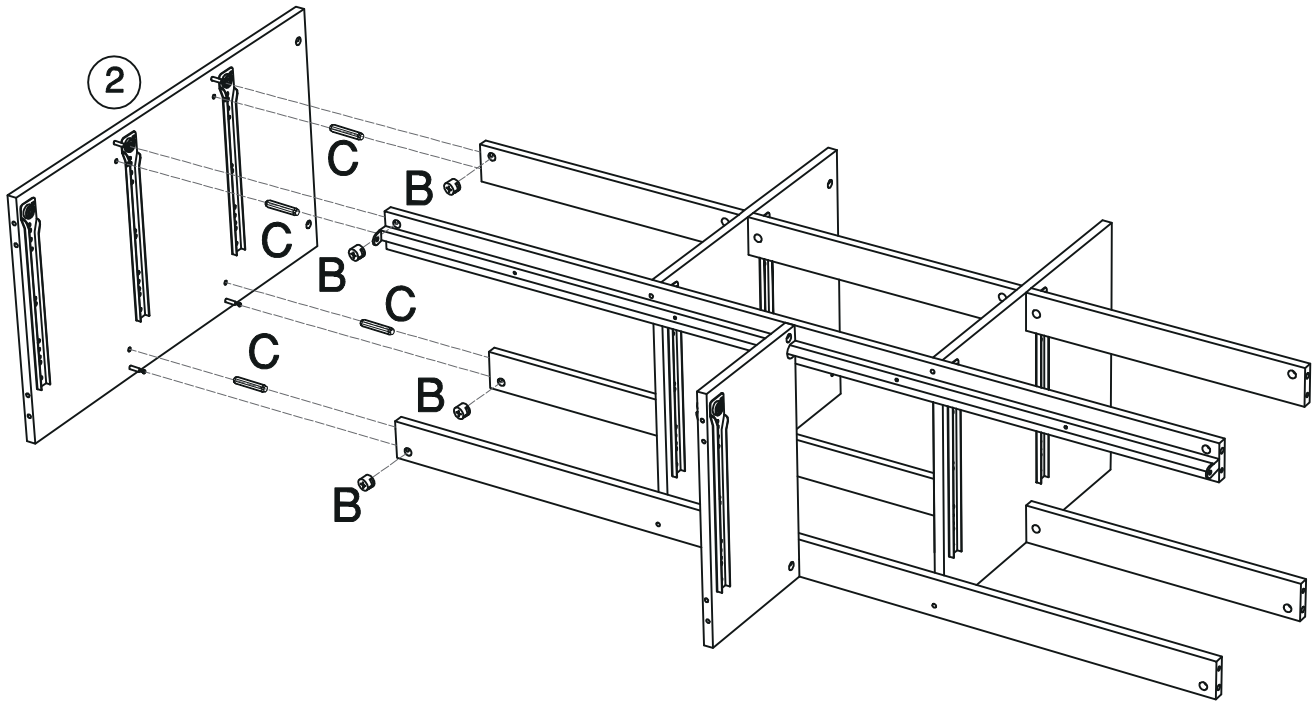

Step 13

B X 4

C X 4 Ø8×30mm

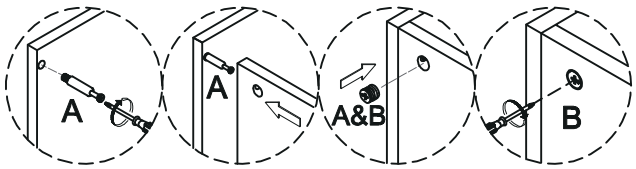

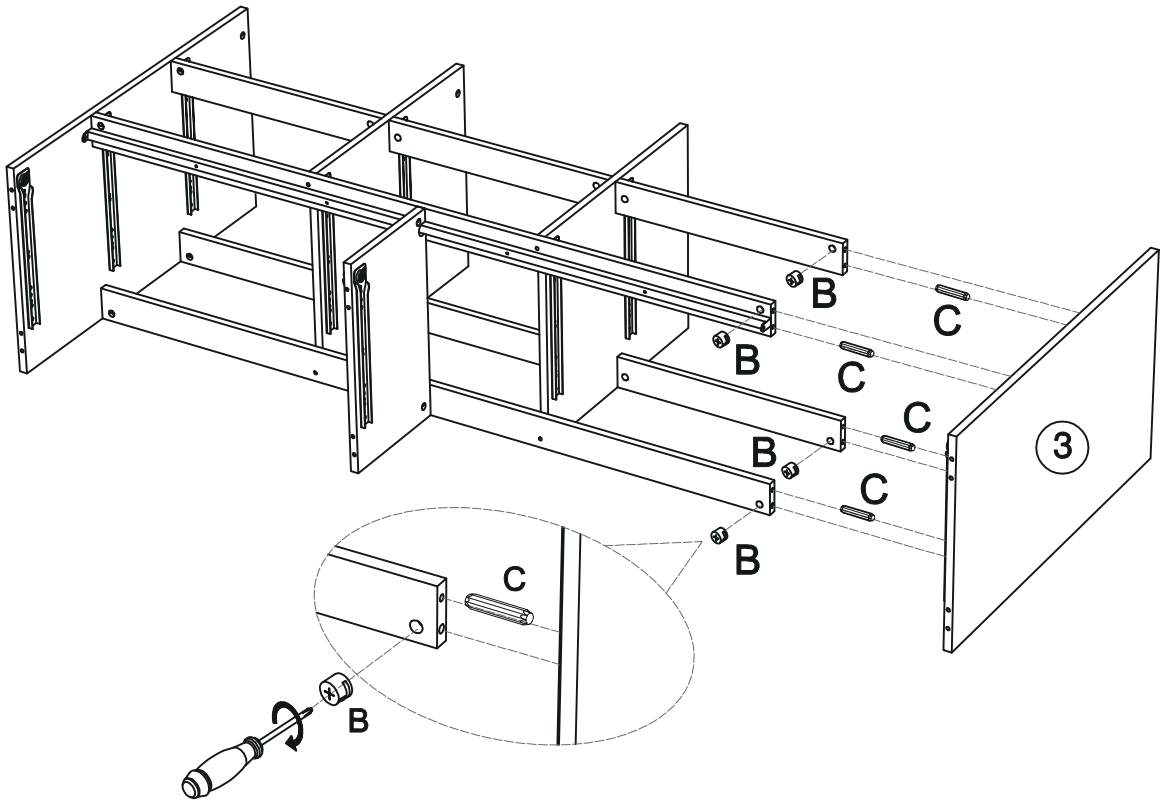

Step 14

N X 6
Ø4×45mm

C X 6
Ø8×30mm

G X 2
Ø3×12mm

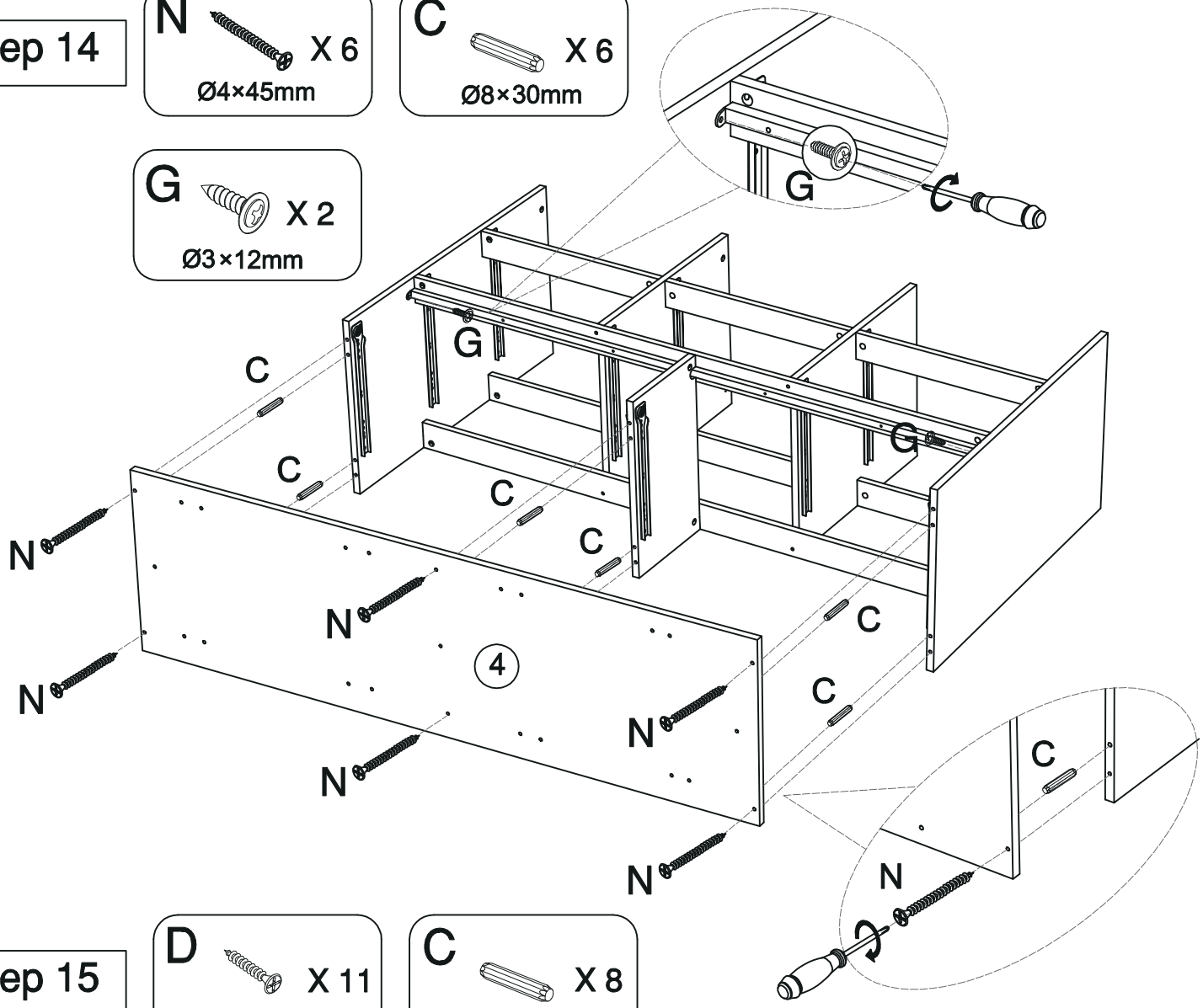

Step 15

D X 11
Ø4×38mm

C X 8
Ø8×30mm

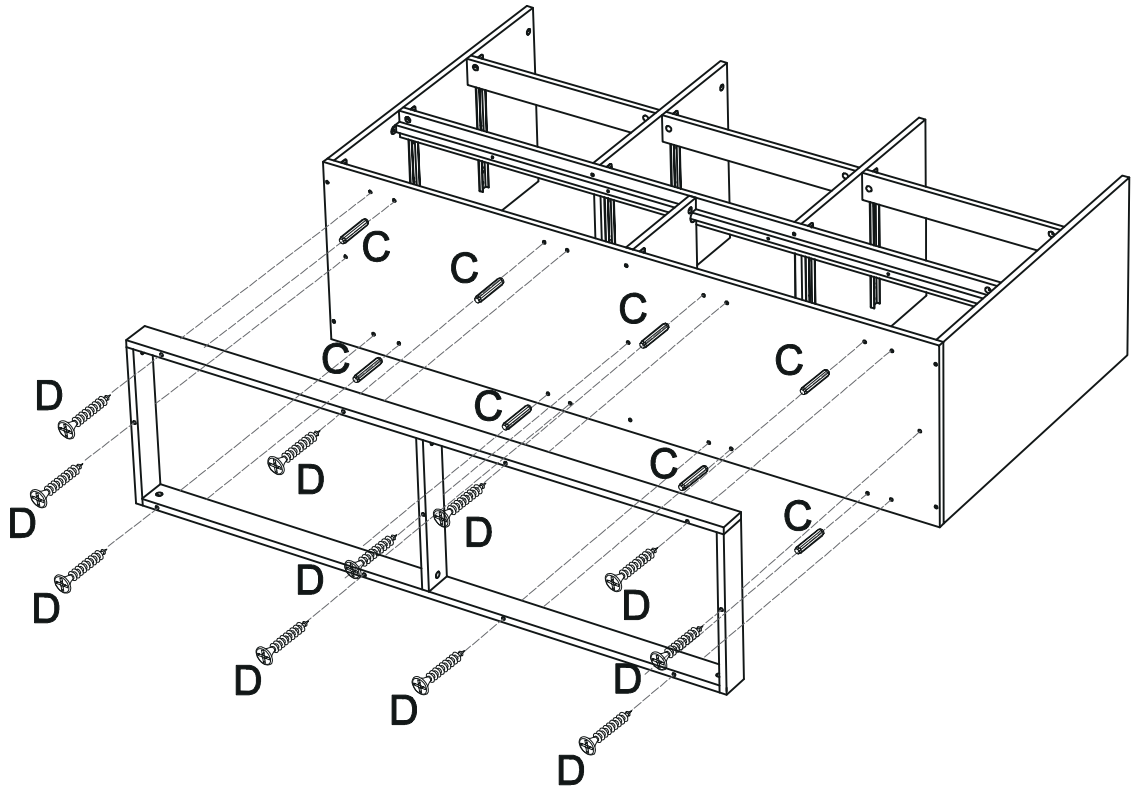

Step 16

B X 8

C X 8
Ø8×30mm

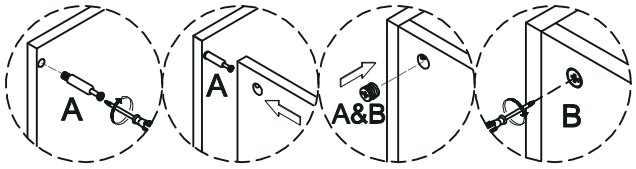

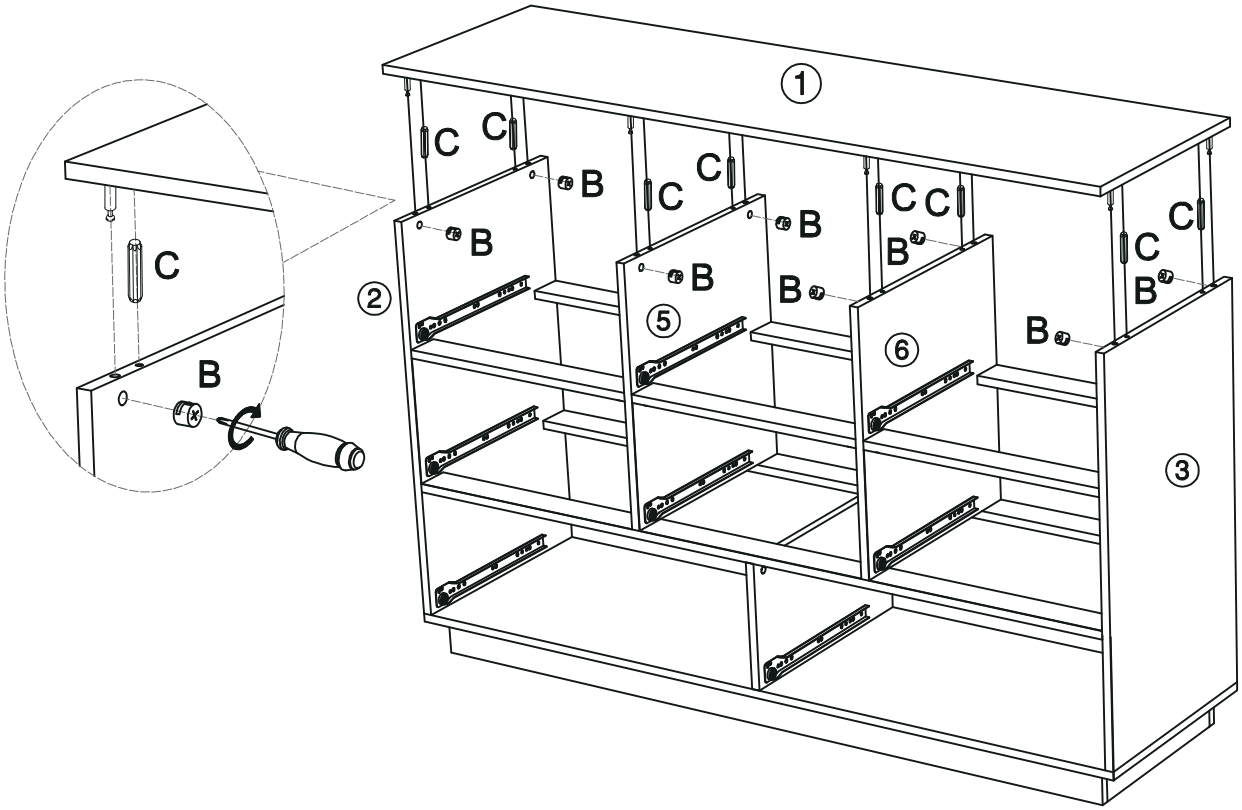

Step 17

G X 26
Ø3×12mm

L	Ø3*12MM	
SAFETY STRAP KIT 1 set	2 PCS	2 PCS

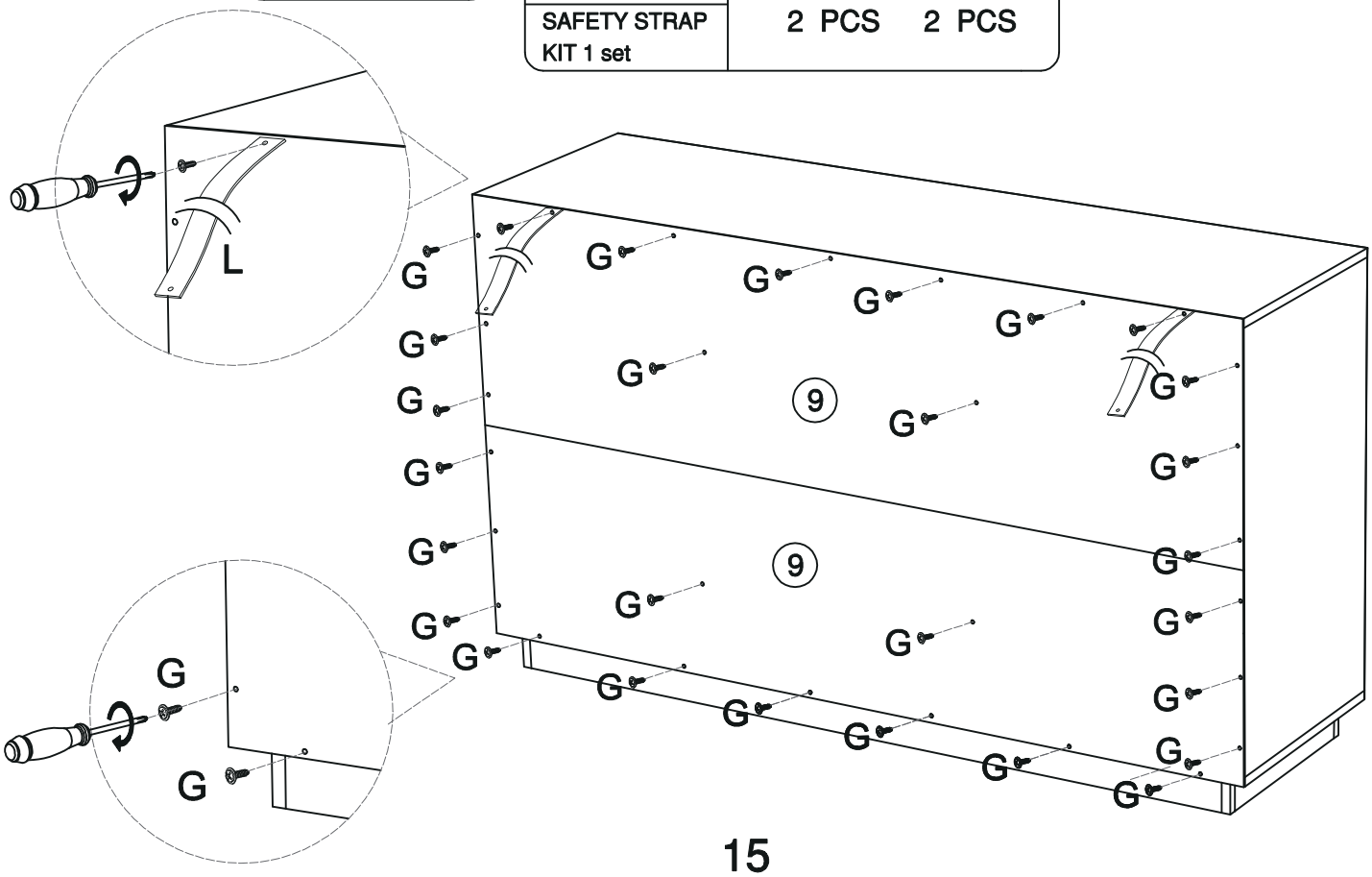

Step 18

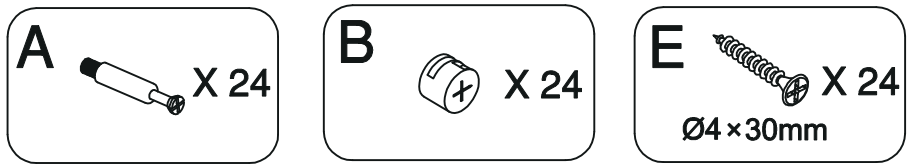

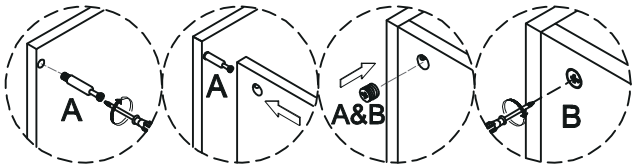

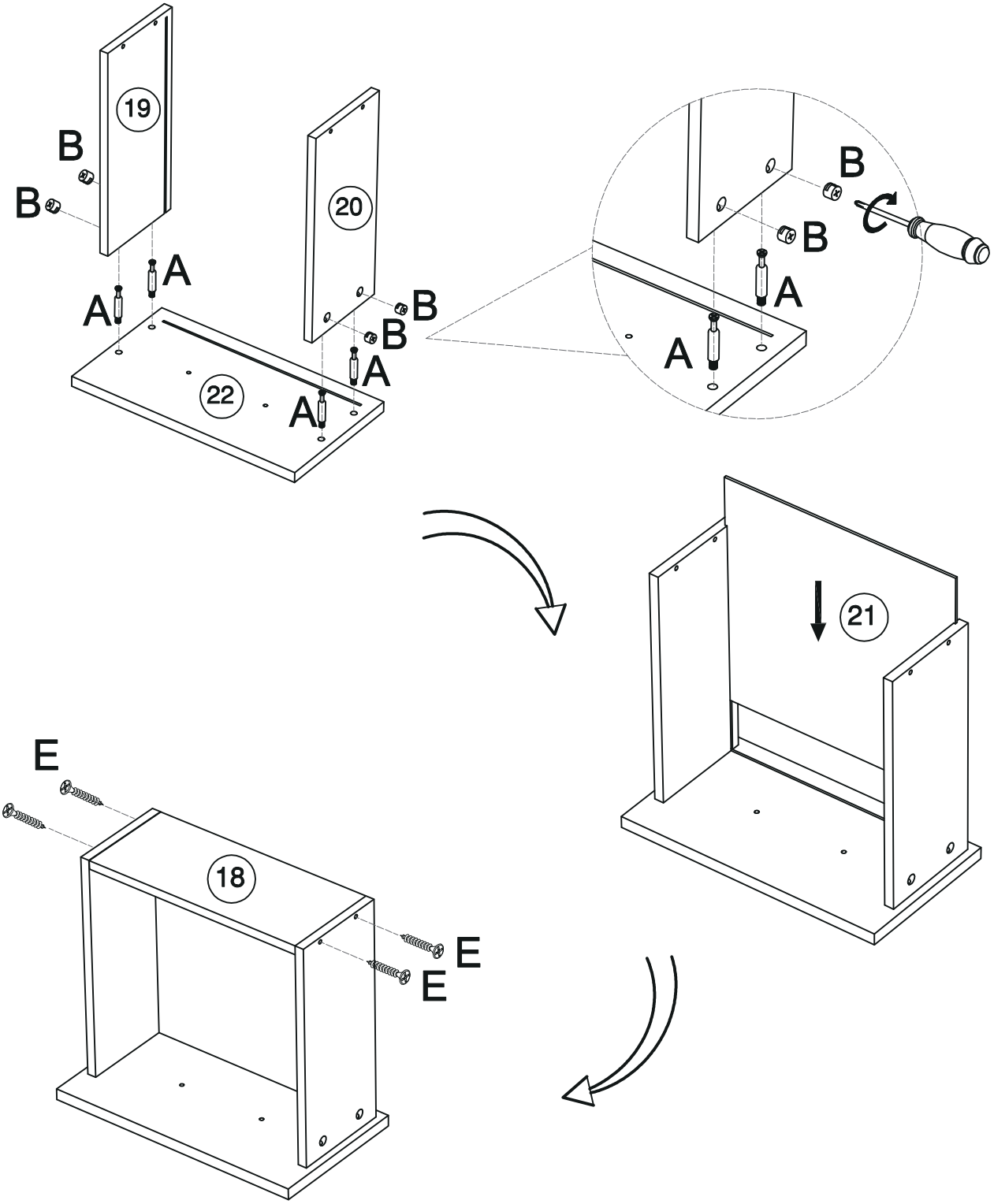

Step 19

F X 36
Ø3.5x12mm

I X 6

H DR DL X 6

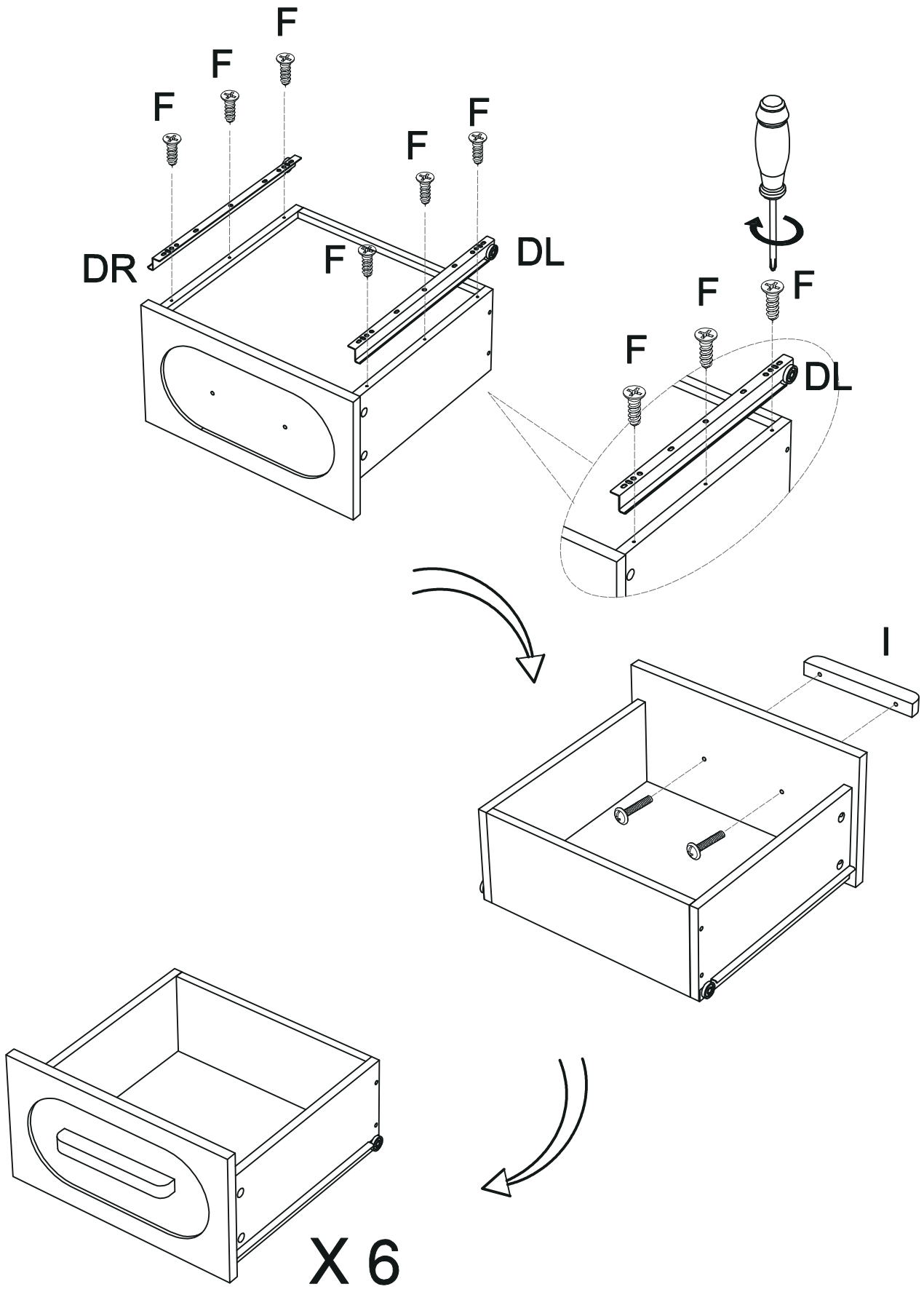

Step 20

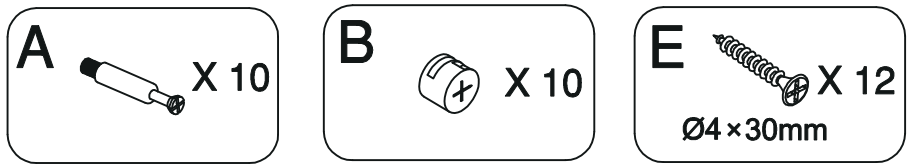
A
X 10
B
X 10
E
X 12
Ø4×30mm

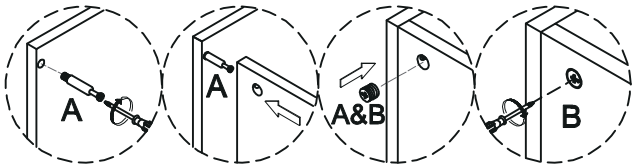
A
A
A&B
B

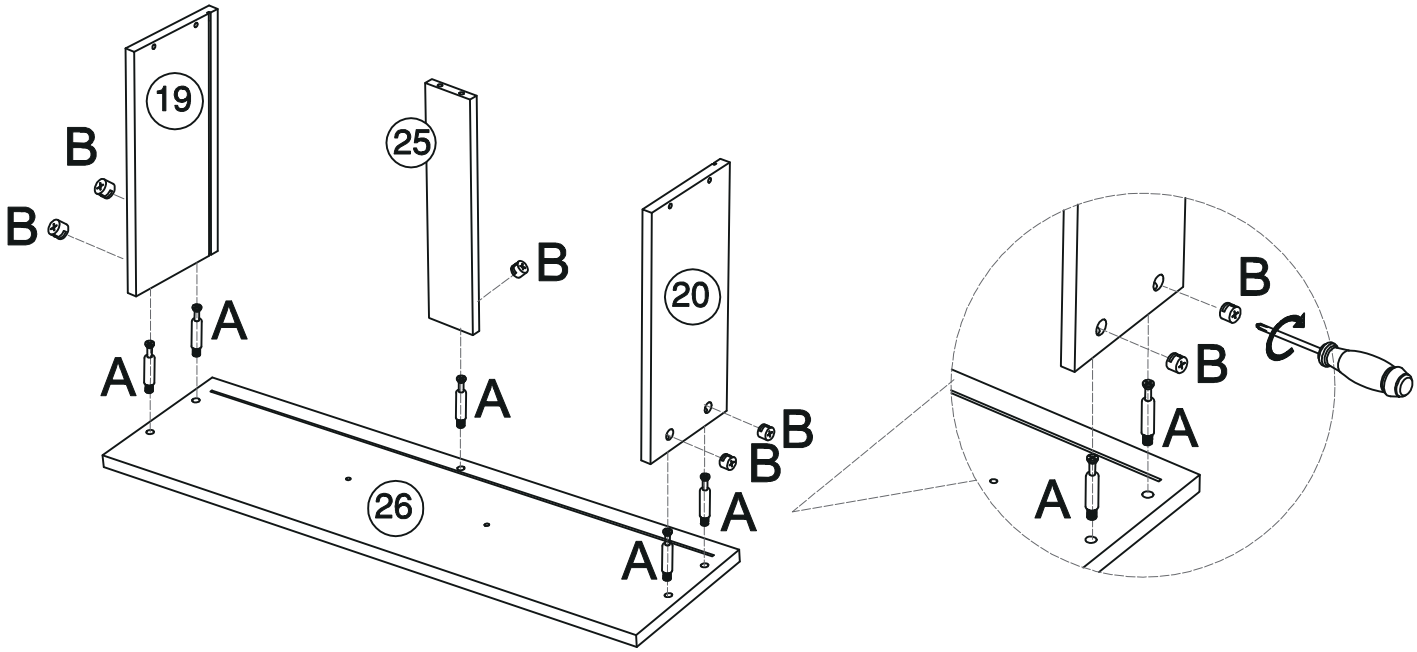
19
B
B
A
A
25
B
A
20
B
B
A
A
26
A
B
B
A
A

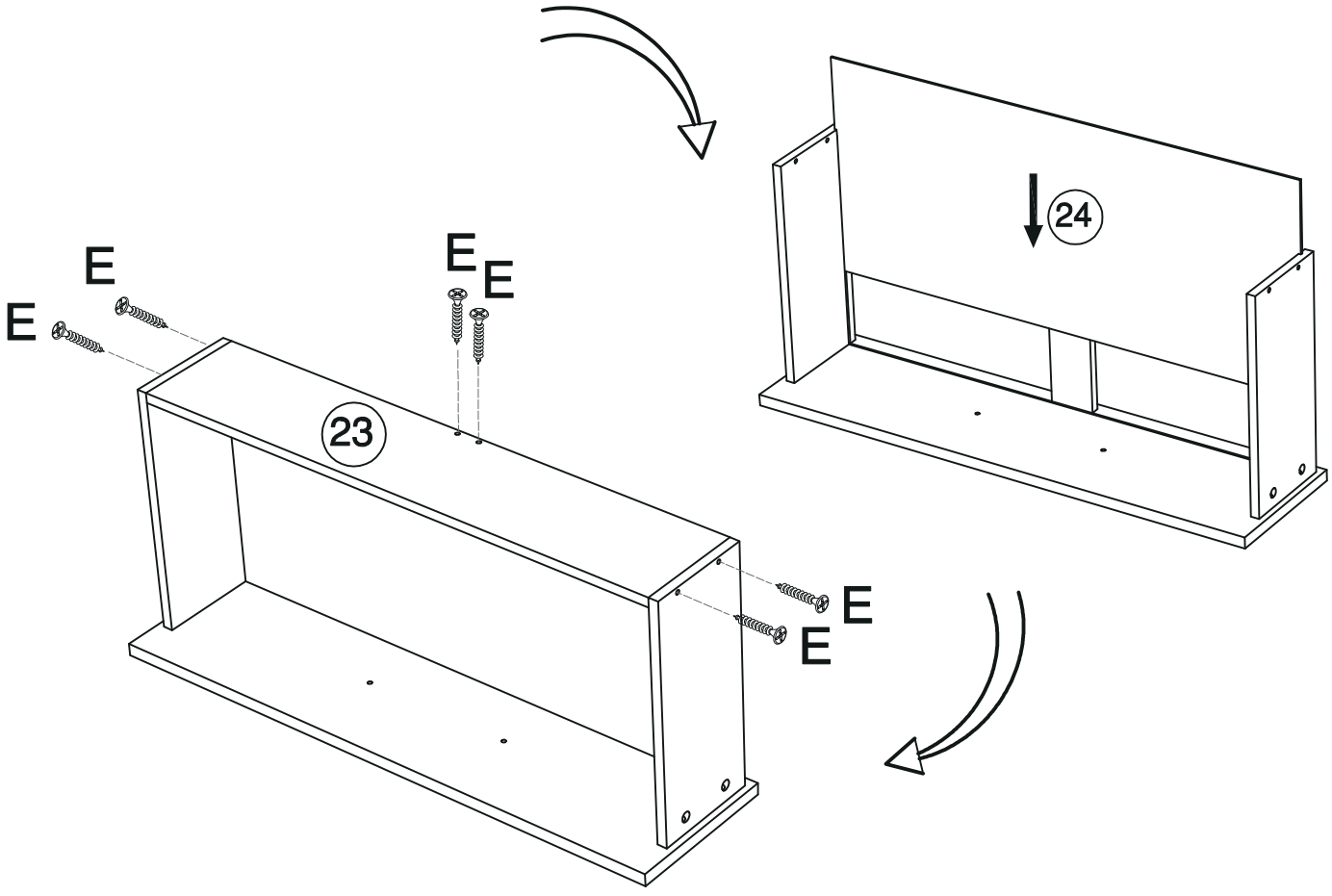
E
E
E
E
23
E
E
24

Step 21

F X 12
Ø3.5x12mm

J X 2

M DR DL X 2

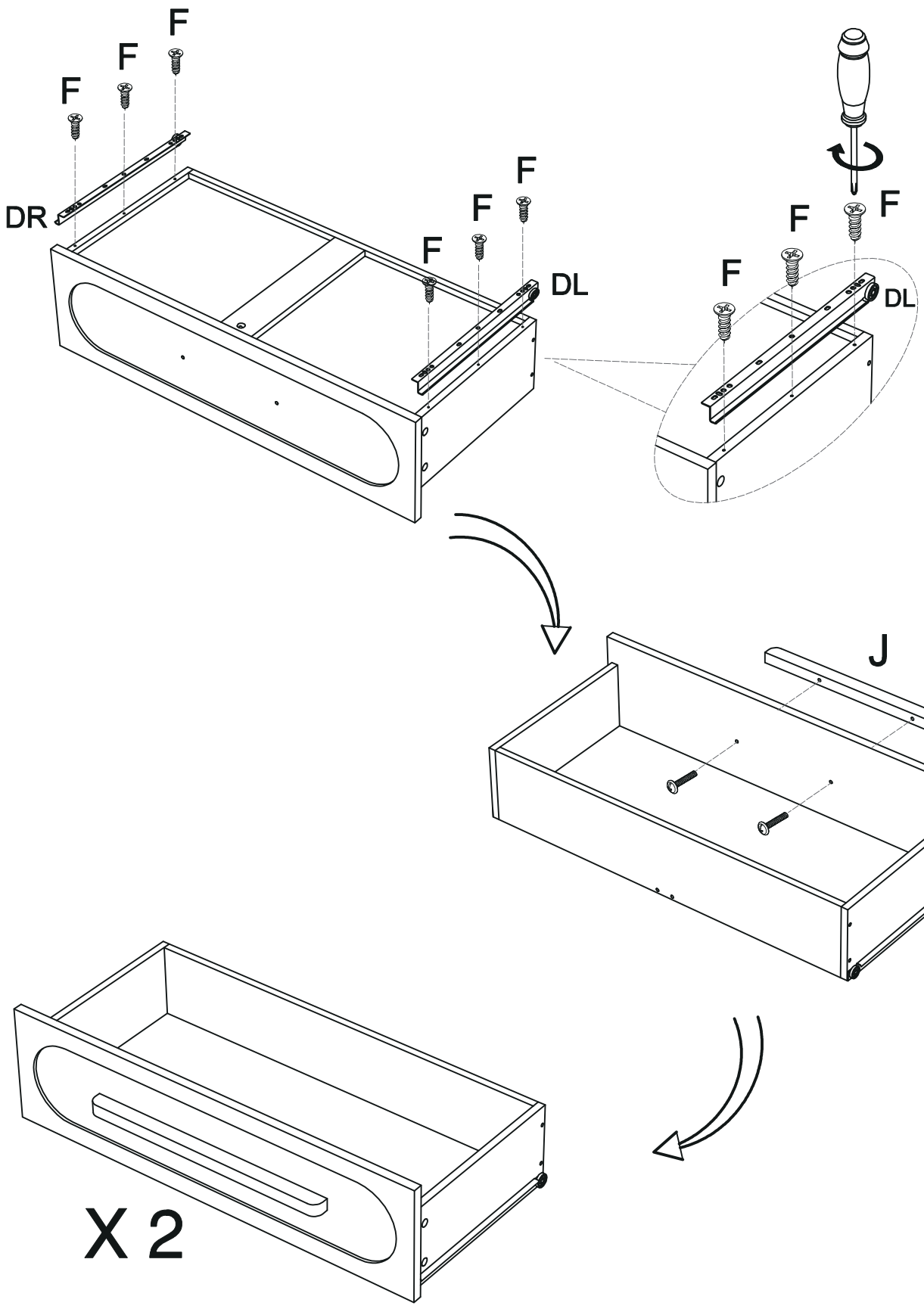

Step 22

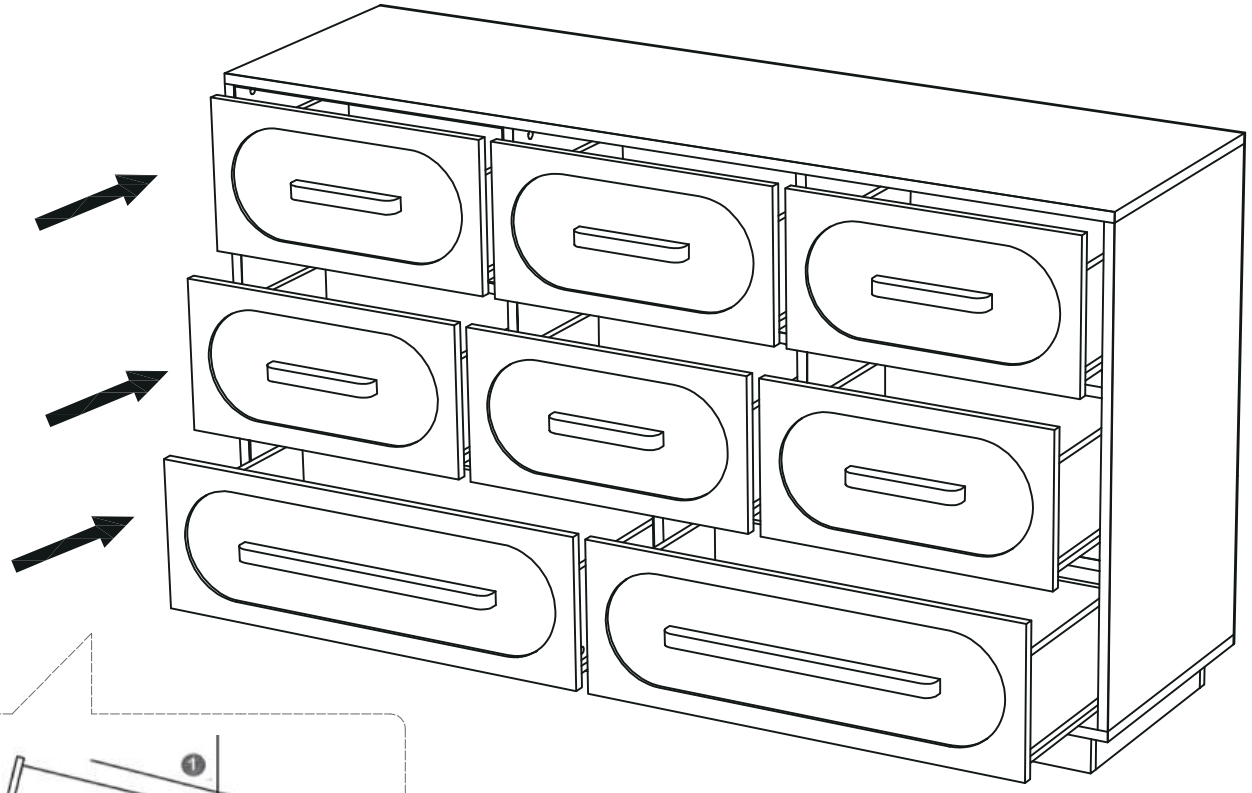

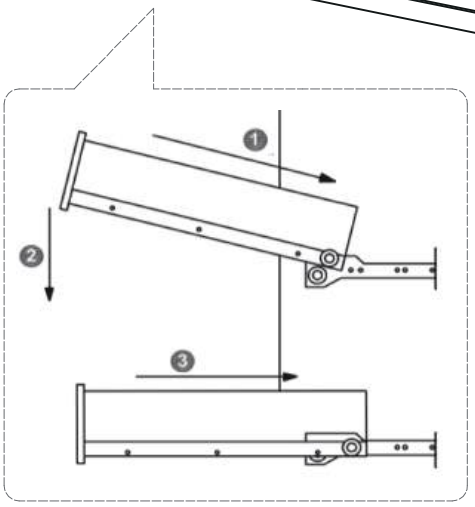

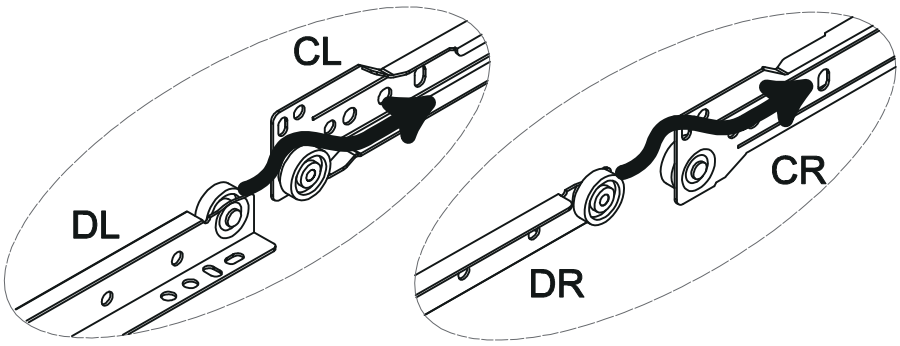

Step 23

L	Ø4*38MM	
SAFETY STRAP KIT 1 set	2 PCS	2 PCS

