OPERATIONS MANUAL

MADE IN CHINA

Assembly & Installation Instructions

Dear Customer:
Thank you for your business!

We will do everything possible to make you completely satisfied with your purchase. Product reviews help future customers to make their purchase decision. You are encouraged to share your experience by leaving a short product review on the platform where you bought this product.
Thank you!

Warning: If any special control devices are used with this fixture, follow the instructions carefully to assure full compliance with N.E.C.requirements. If there are any questions, contact a qualified electric contractor.

Warning: California Residents Proposition 65 This product contains lead, a chemical known to the state of California to cause cancer and birth defects or other reproductive harm. Do not place the product in your mouth. Wash your hands after handling this product.

Caution: It is highly recommended to get an electrician to install this light. Please make sure to turn the electricity off at the main circuit breaker before beginning installation. All glass is fragile.Use care when handling glass component(s)and/or lamp(s).

Step2

1A. Lock the crossbar to the junction box of the ceiling by using 2 pcs of 5/32 screws in the accessories bag.
1B.Connect the wires. The hot/positive wire (+) has an "L" label on it. The other one is the negative wire (-). And the bare cooper is the ground wire.
1C.Attach the canopy to the ceiling with screws

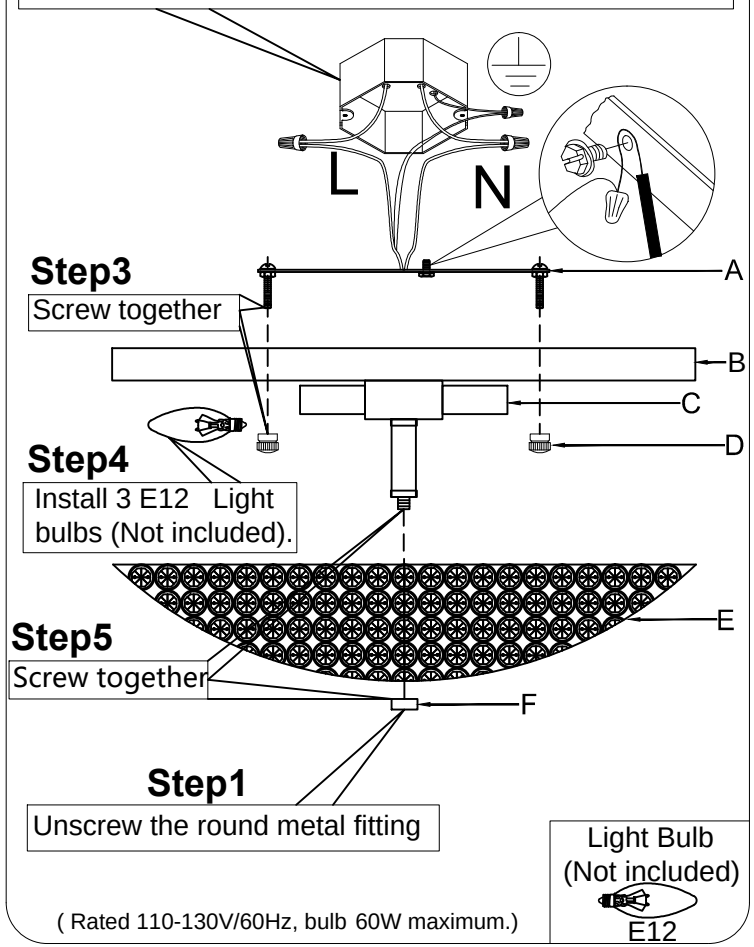

WIRE CONNECTION DIAGRAM

Wires meeting safety standards are required to connect the electrical circuit.

CAUTION: Risk of fire

Please read all instructions carefully. Before you proceed to install, make sure that the power supply is turned off and remains off until installation is completed.

PARTS INCLUDED

Code	Part Description	QTY
A	Mounting Bracket	1
B	Canopy	1
C	lamp Body	1
D	Cover Nut	2
E	Lamp Shade	1
F	Round Metal Fittings	1