bedside table

Product ID. QB74W

Scan for Support
support@garvee.com

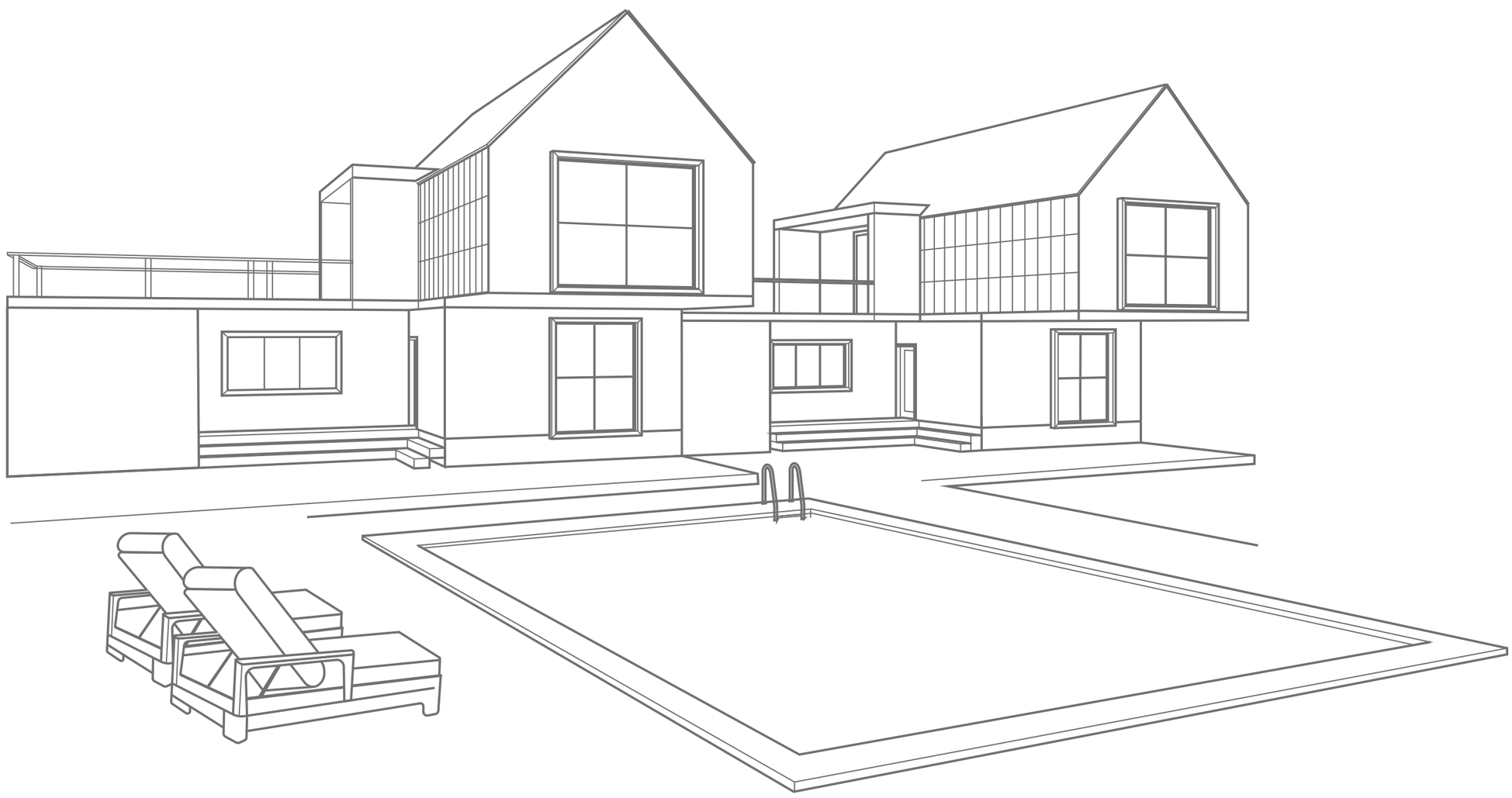

Distributed by
GARVEE.com

V260528WSEG

This package contains two sets of products. Follow the above installation steps to obtain both sets of products

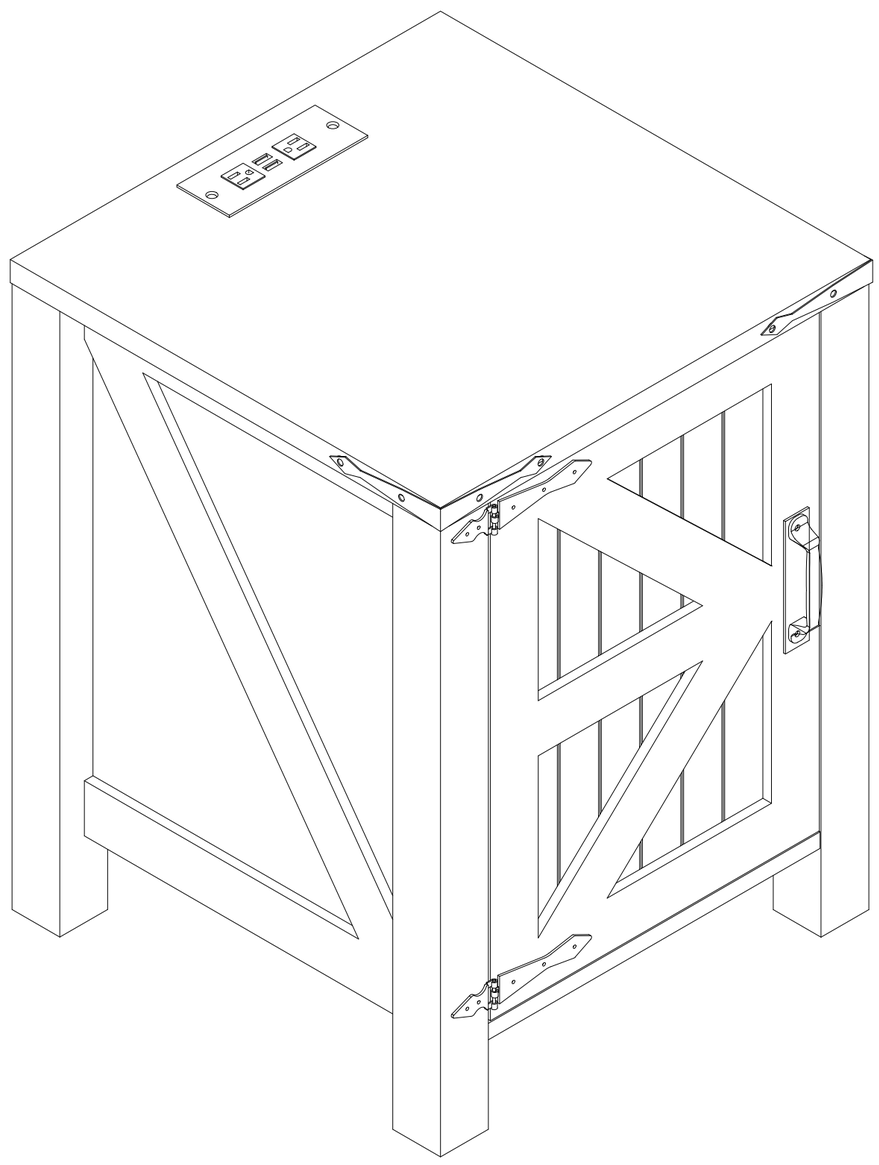

EXPLODED DRAWING:

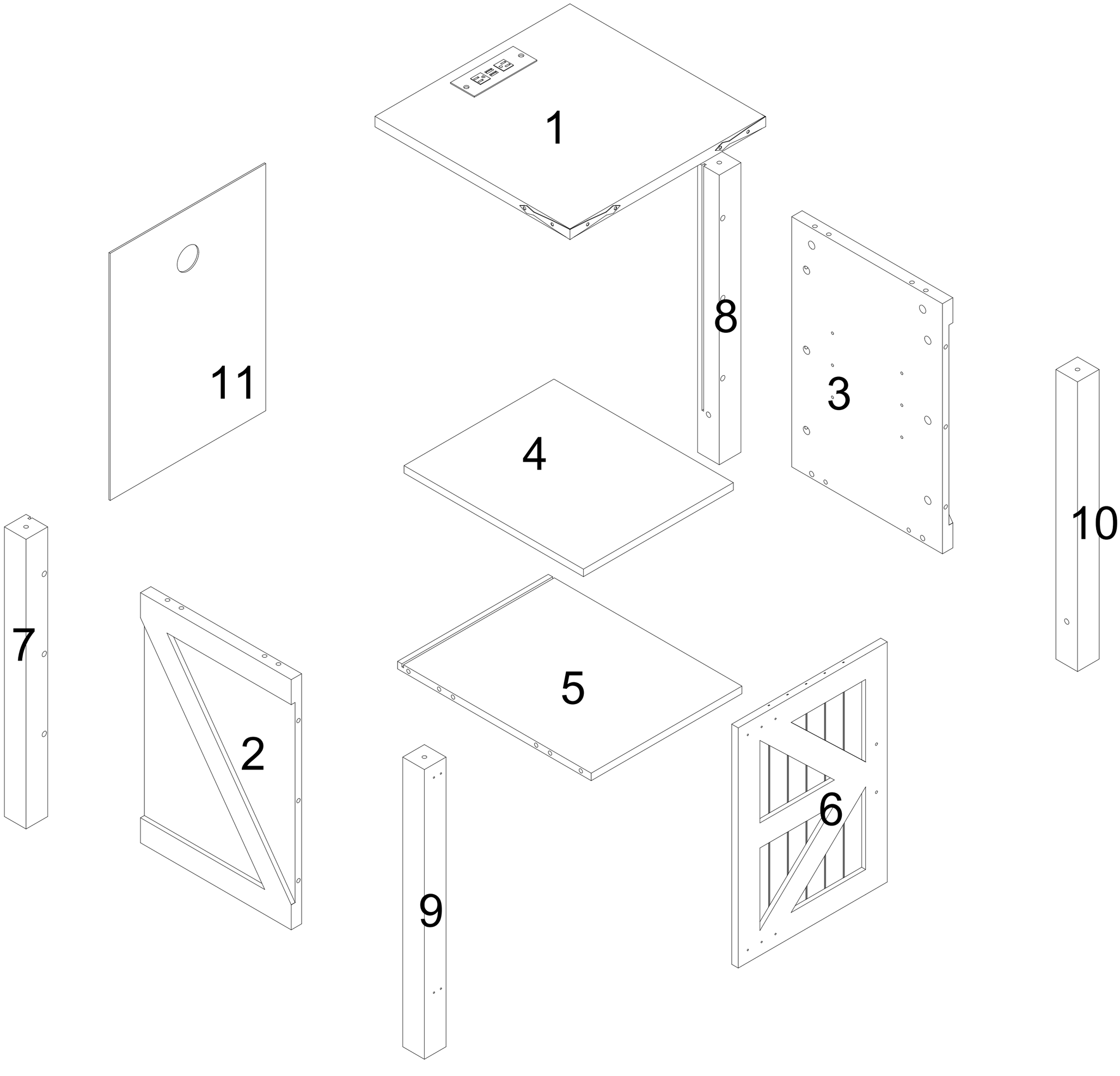

A



24PCS

B

Ø15*12mm



24PCS

C

Ø8*40mm



12PCS

D

Ø3.5*14mm



20PCS

E

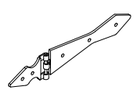

2PCS

F



1PCS

G



1PCS

H

Ø4*21mm



2PCS

I

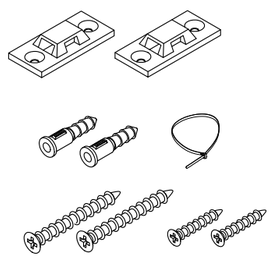

2PCS

J



1PCS

K



4PCS

L

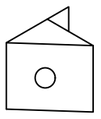

6PCS

M

Ø3*12mm



6PCS

N

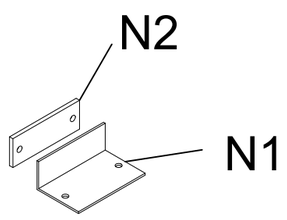

1PCS

STEP1

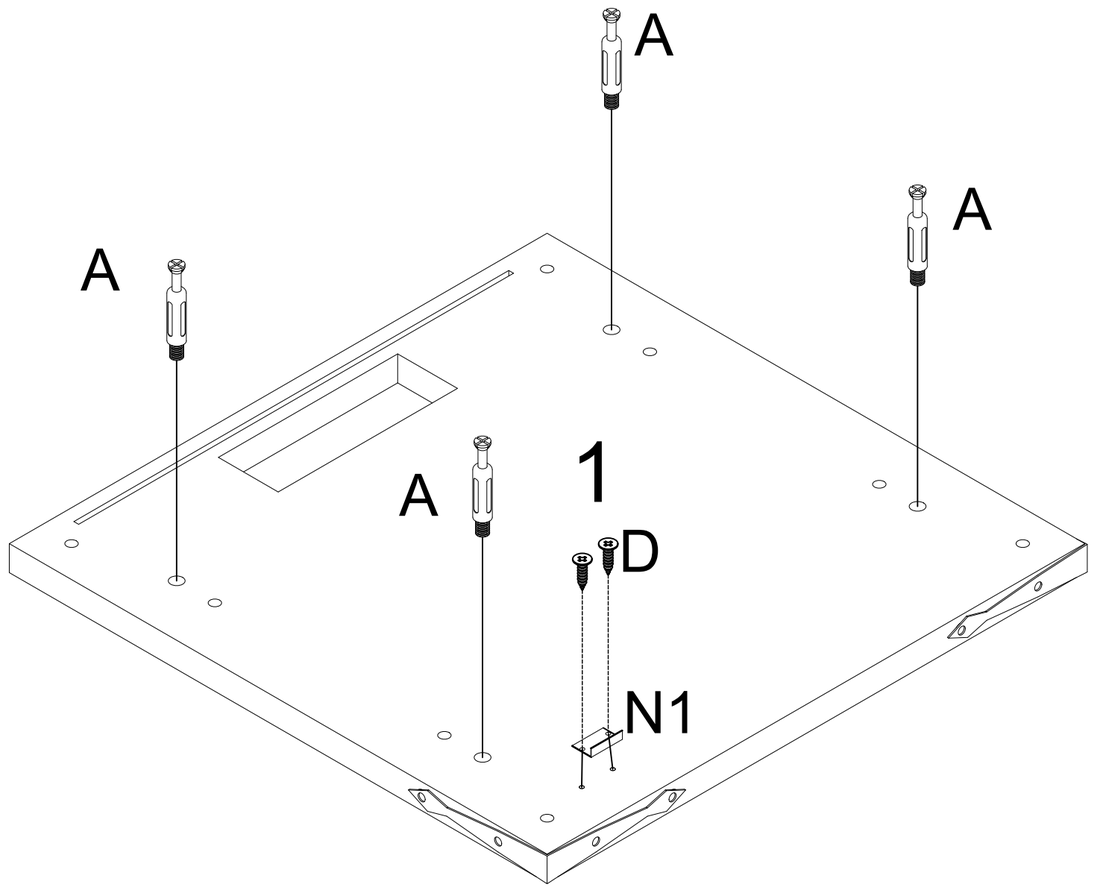

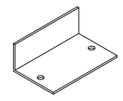	
N1	×1

	
D	×2

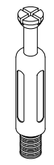 Ø8*40mm	
A	×4

STEP2

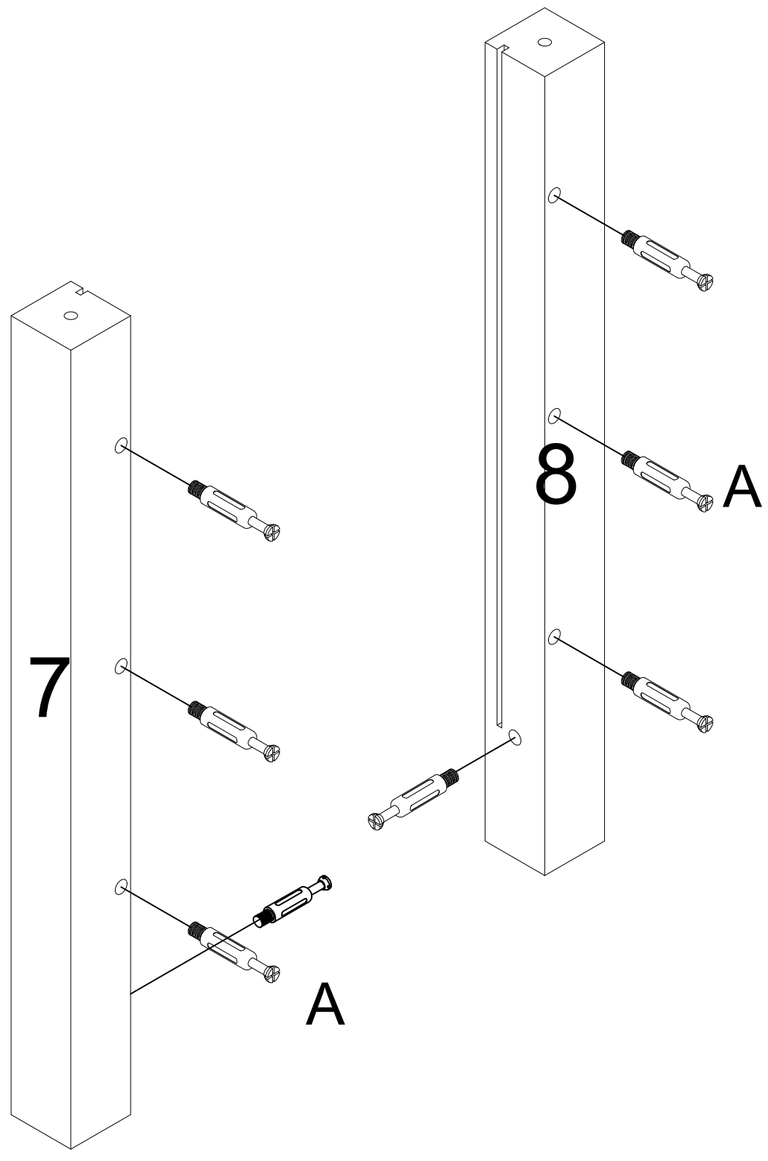

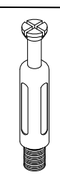 Ø8*40mm	
A	×8

STEP3

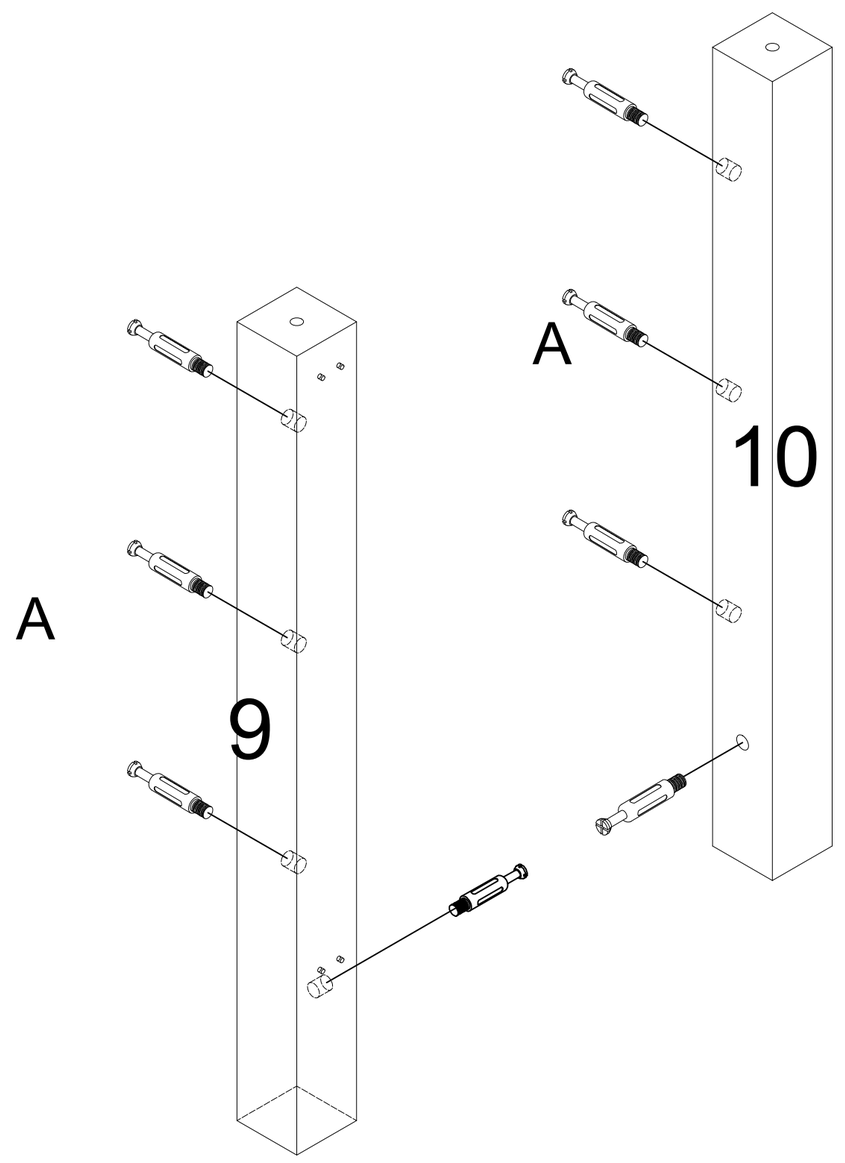

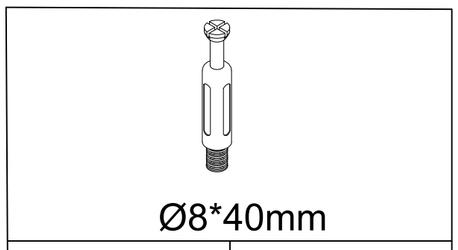

Ø8*40mm	
A	×8

STEP4

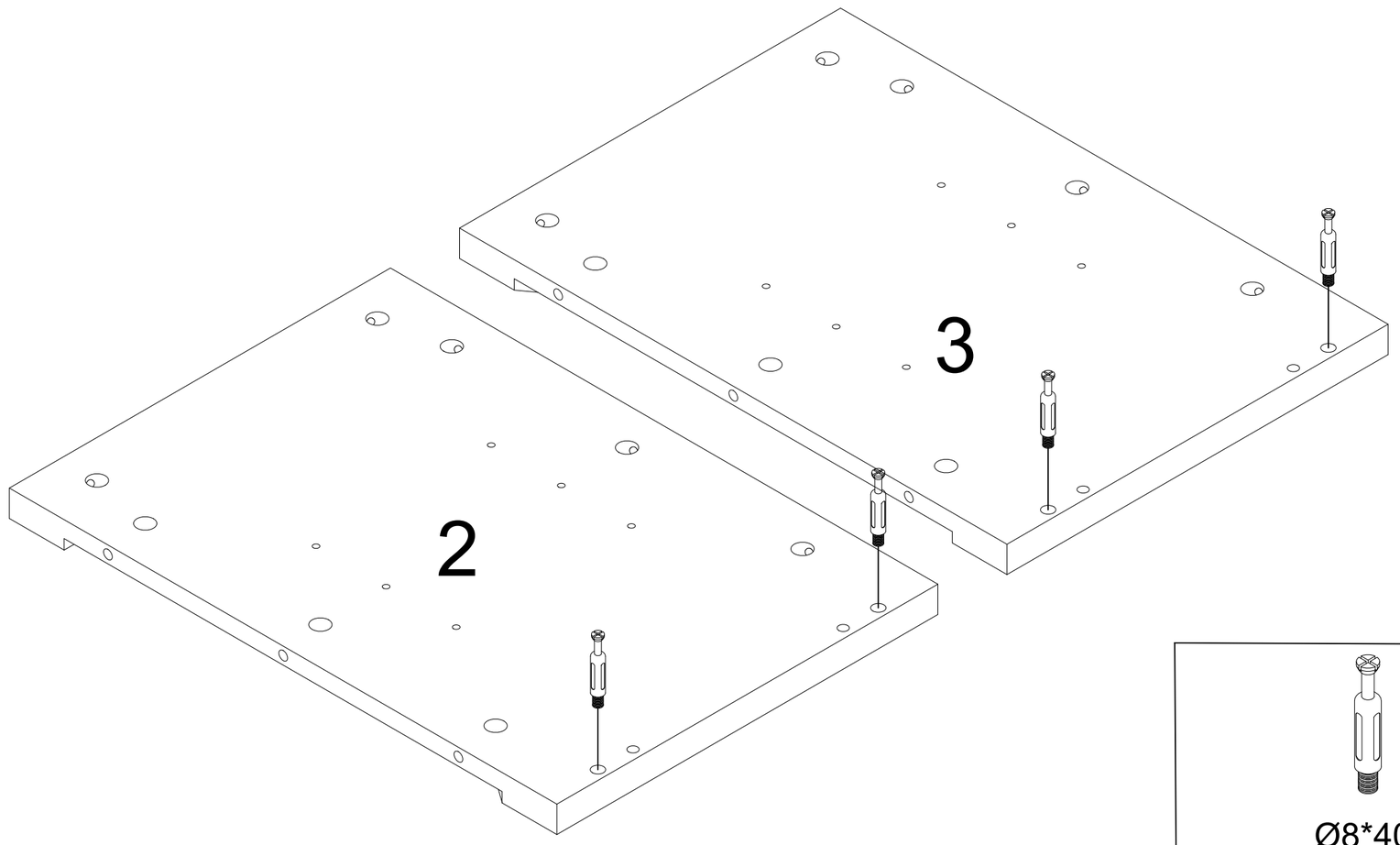

Ø8*40mm	
A	×4

STEP5

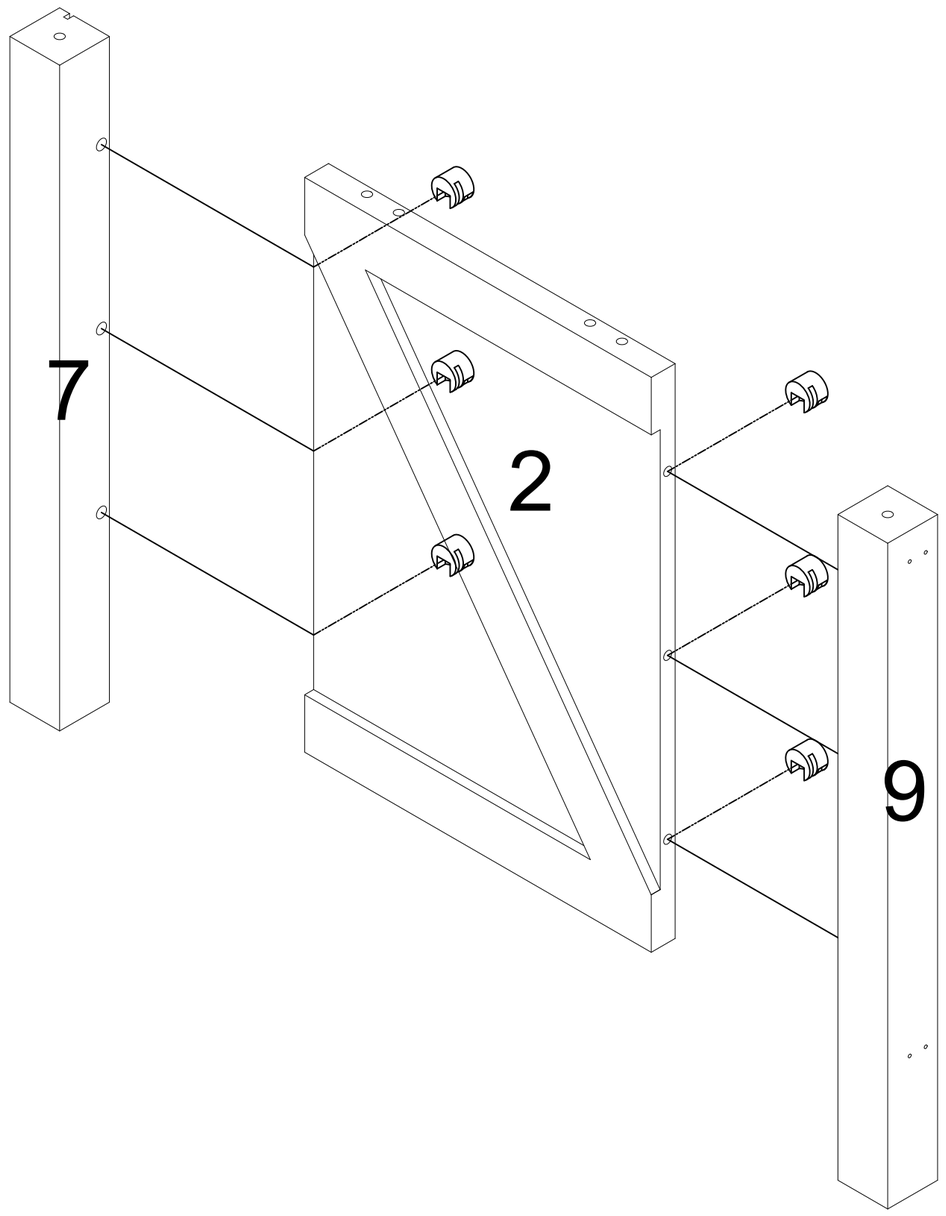

Ø15*12mm	
B	×6

STEP6

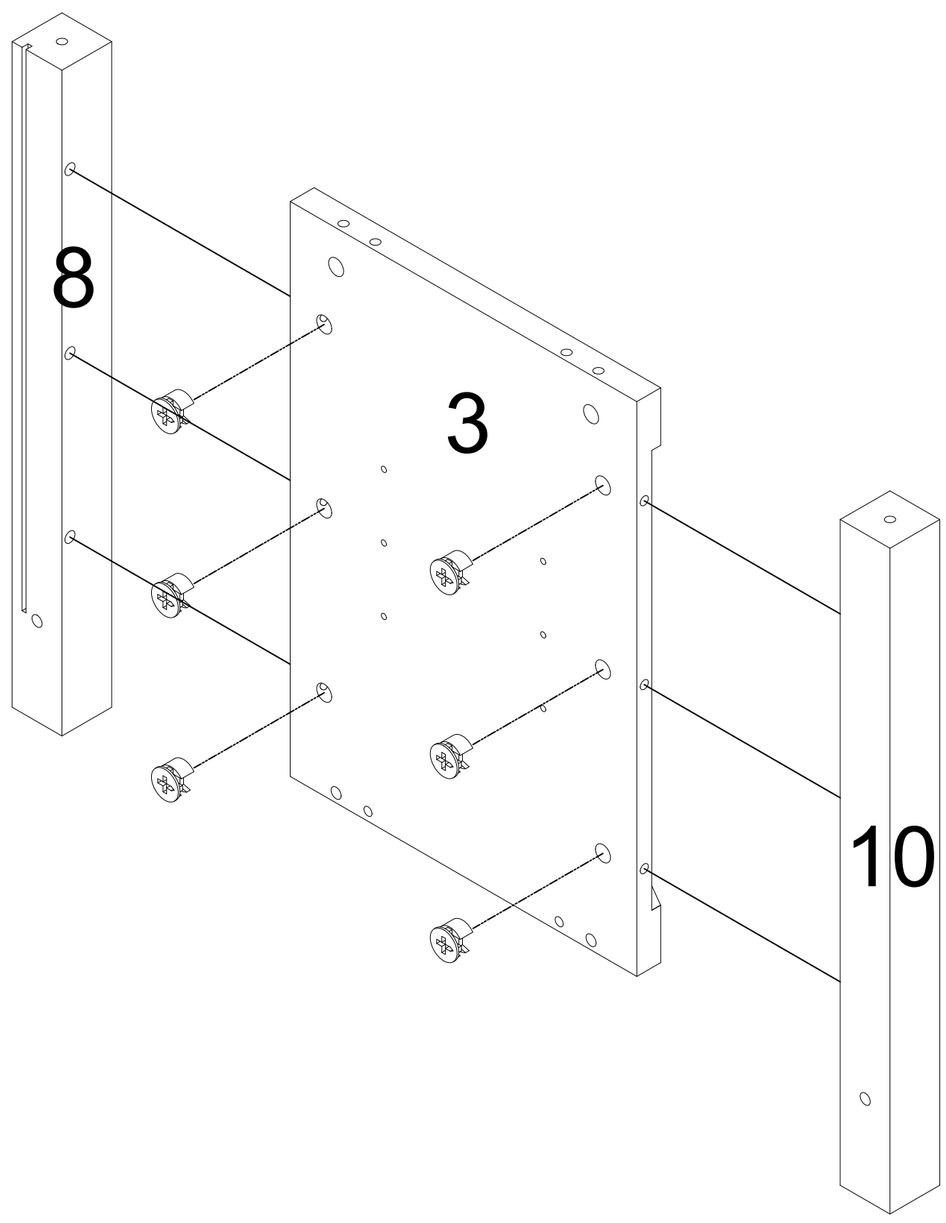

Ø15*12mm	
B	×6

STEP7

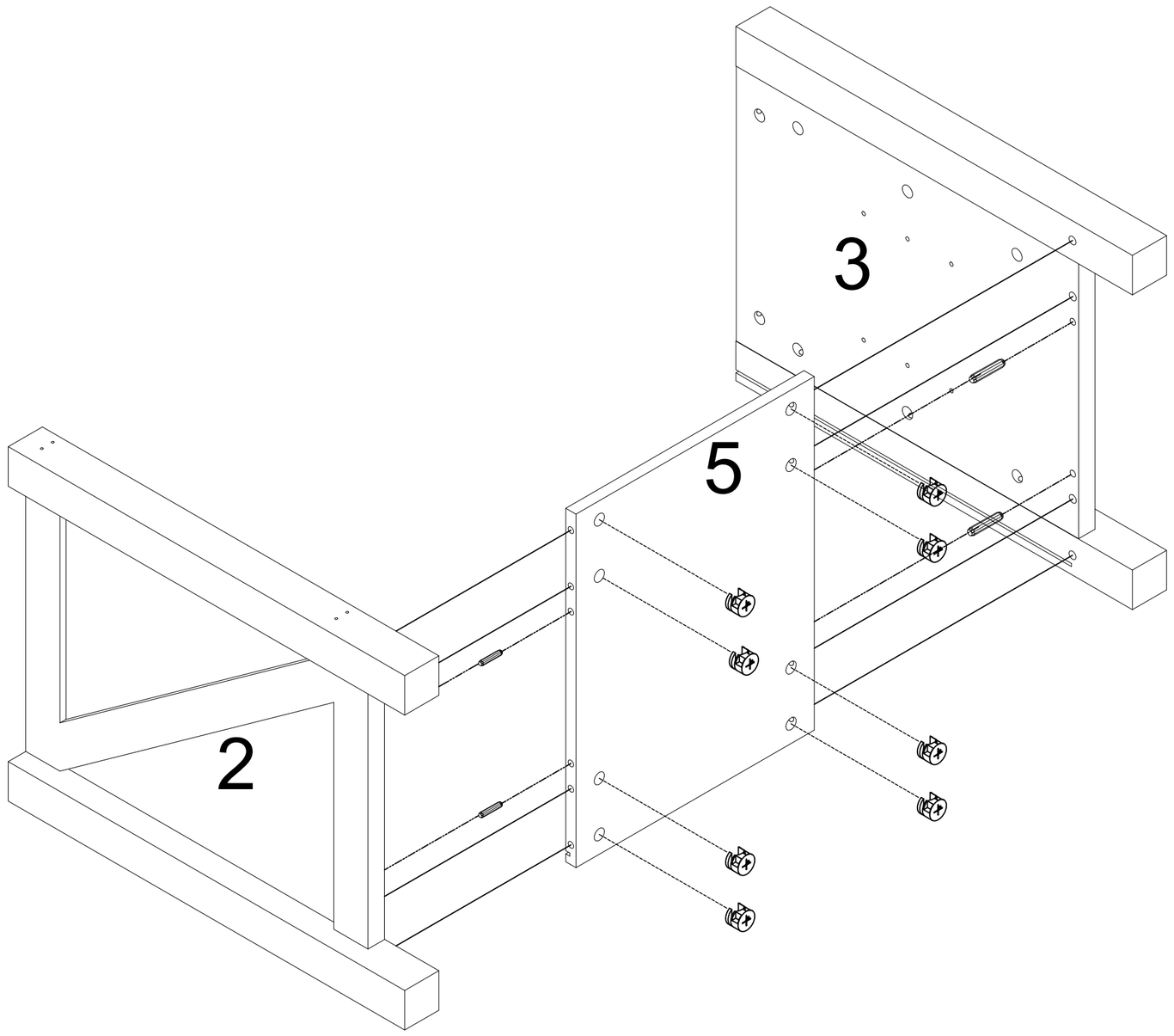

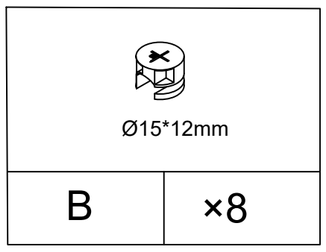

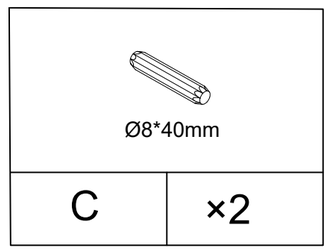

STEP8

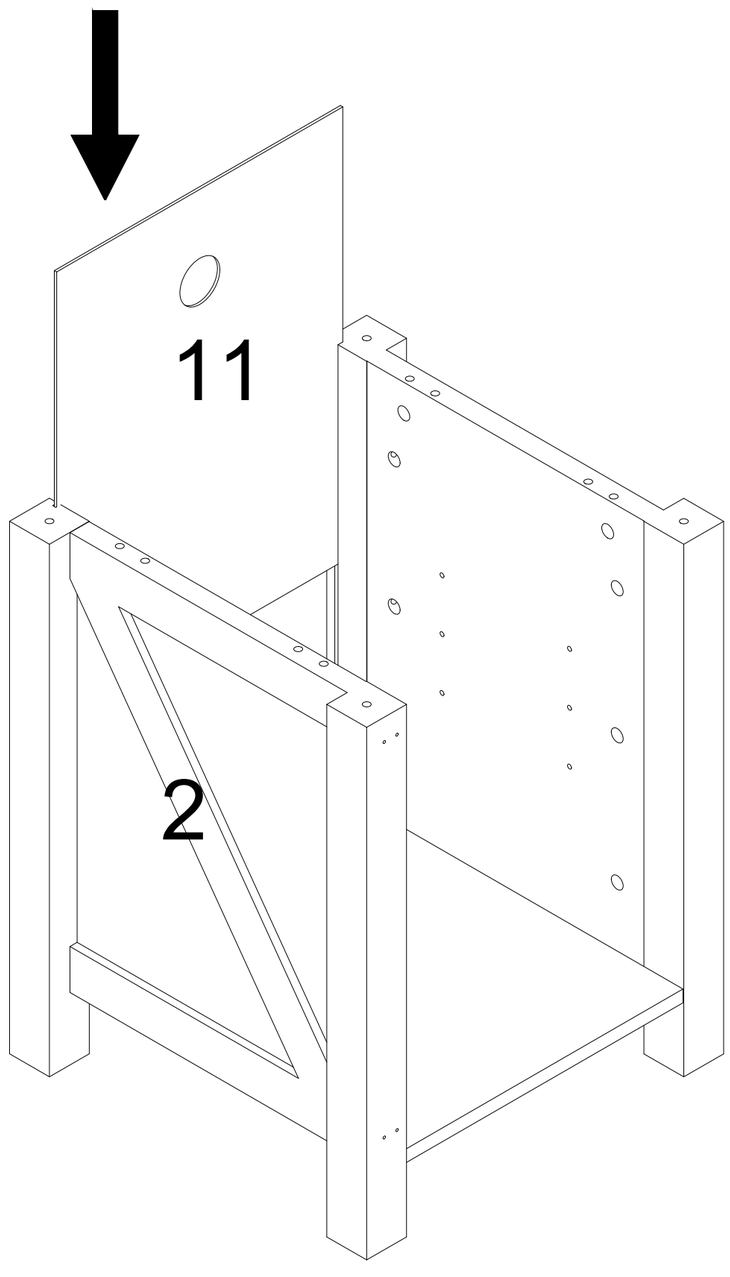

STEP9

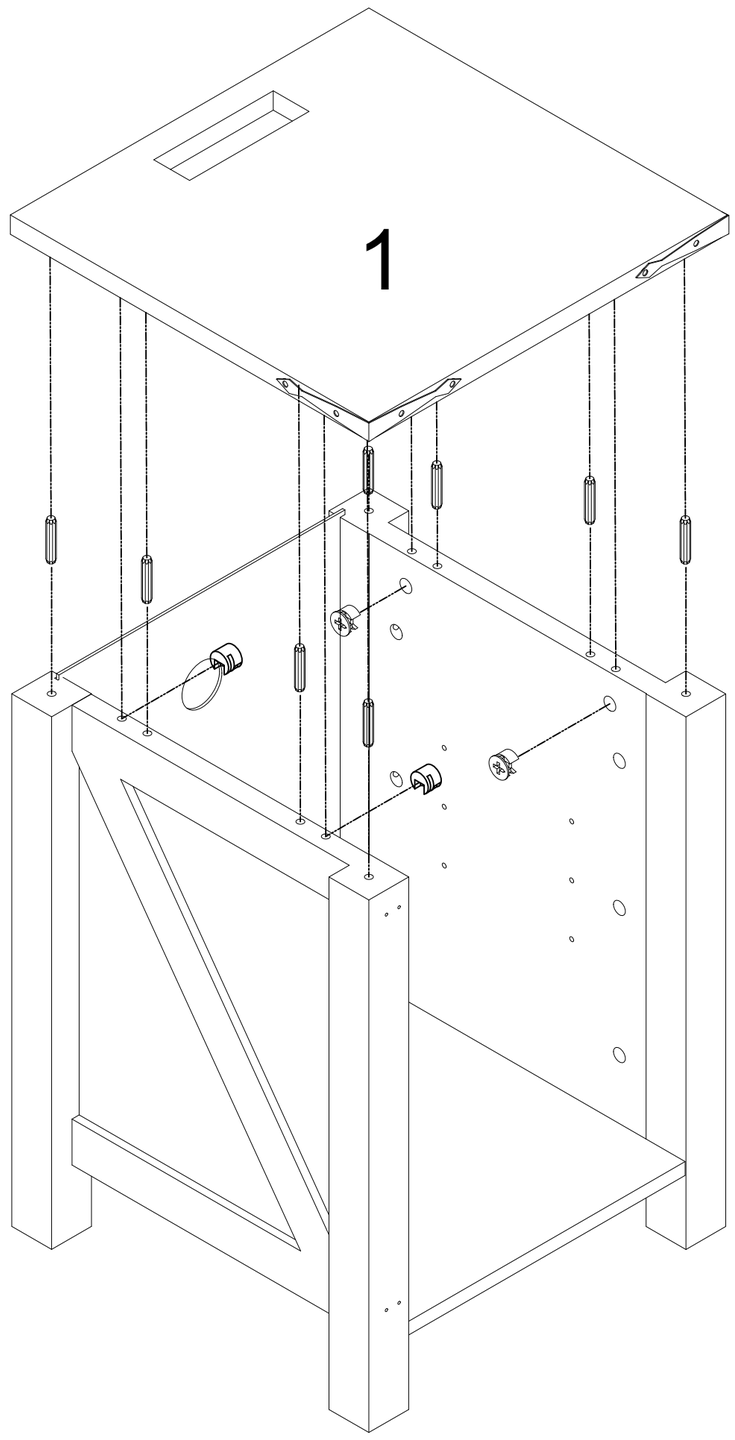

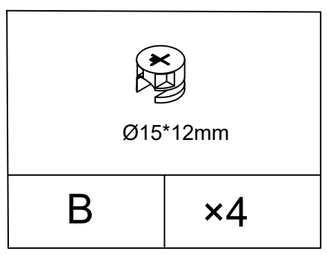

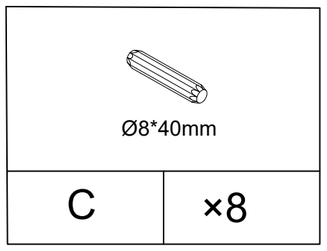

STEP10

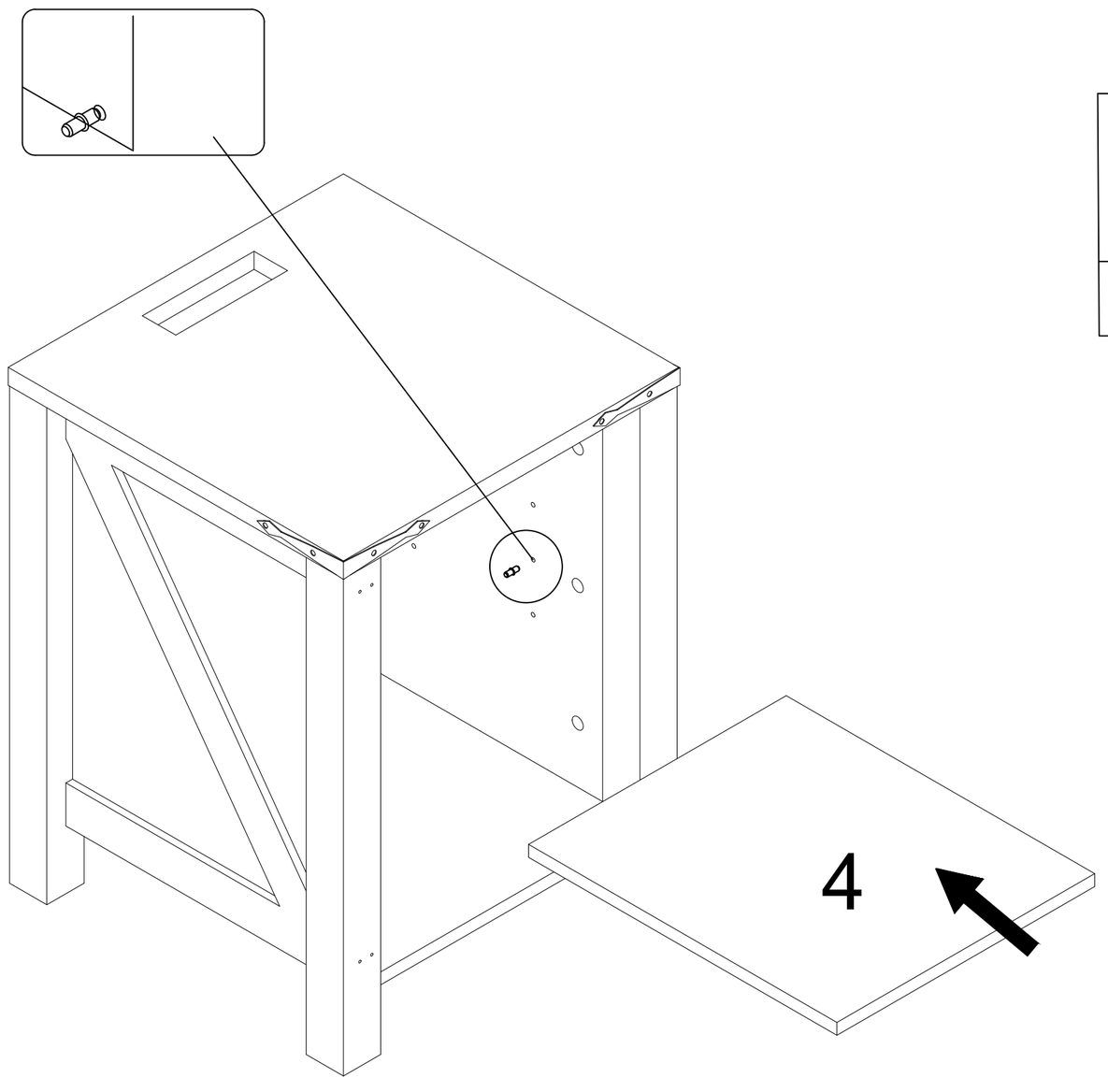

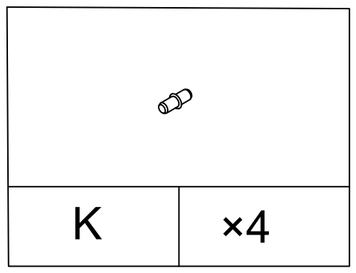

STEP11

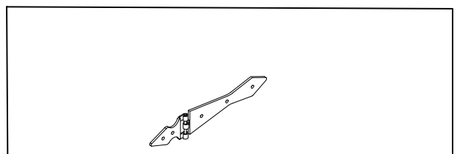

E	×2

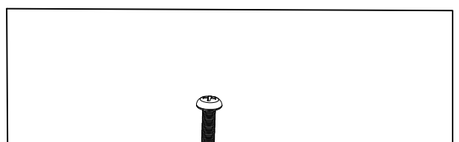

H	×2

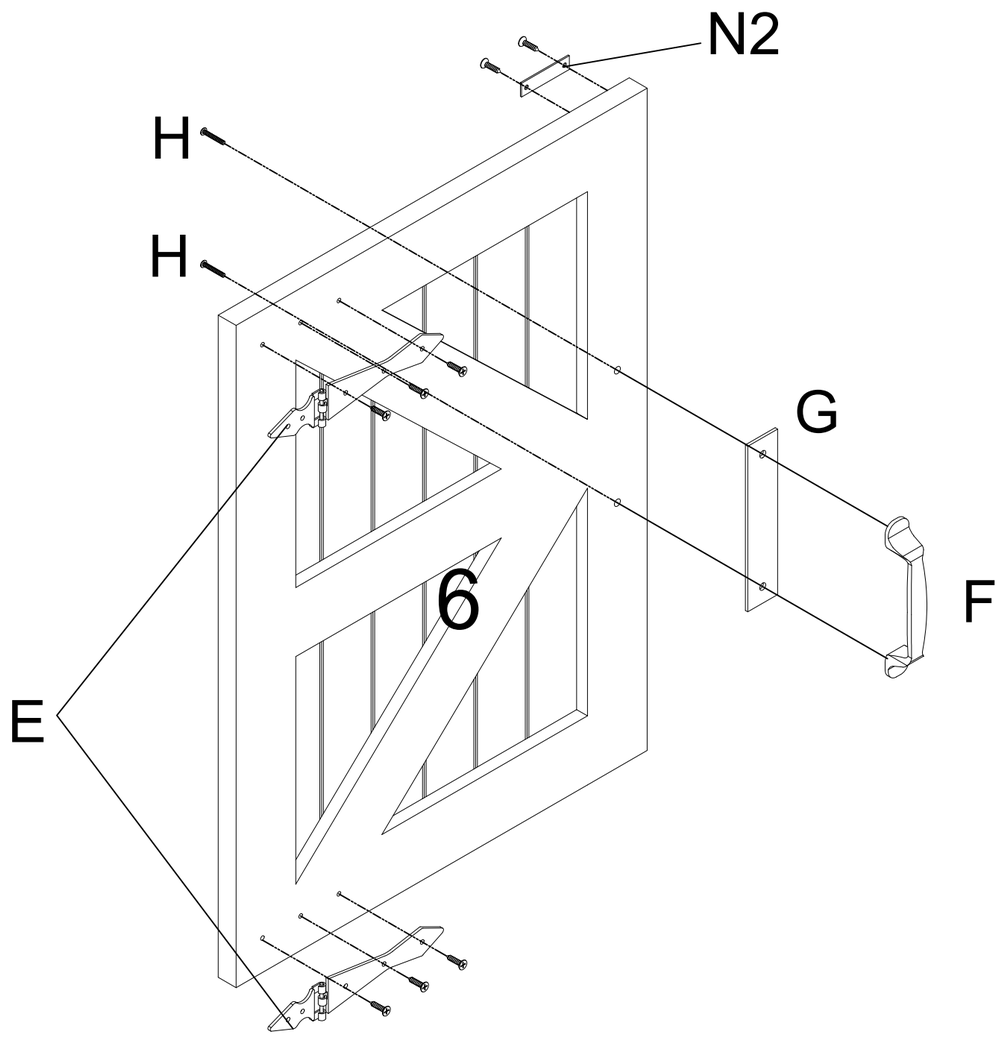

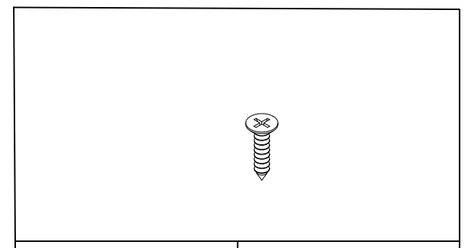

D	×8

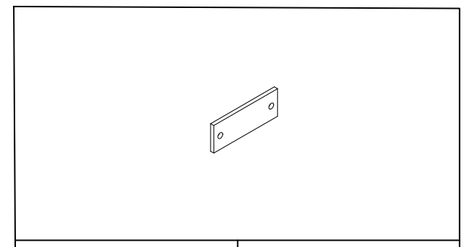

N2	×1

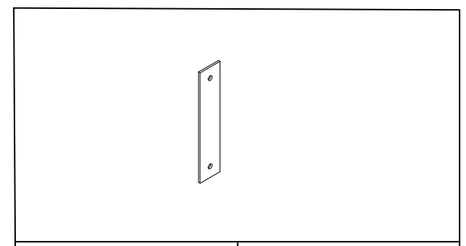

G	×1

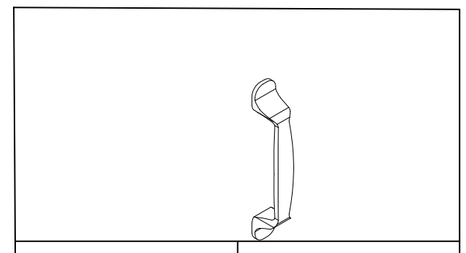

F	×1

STEP12

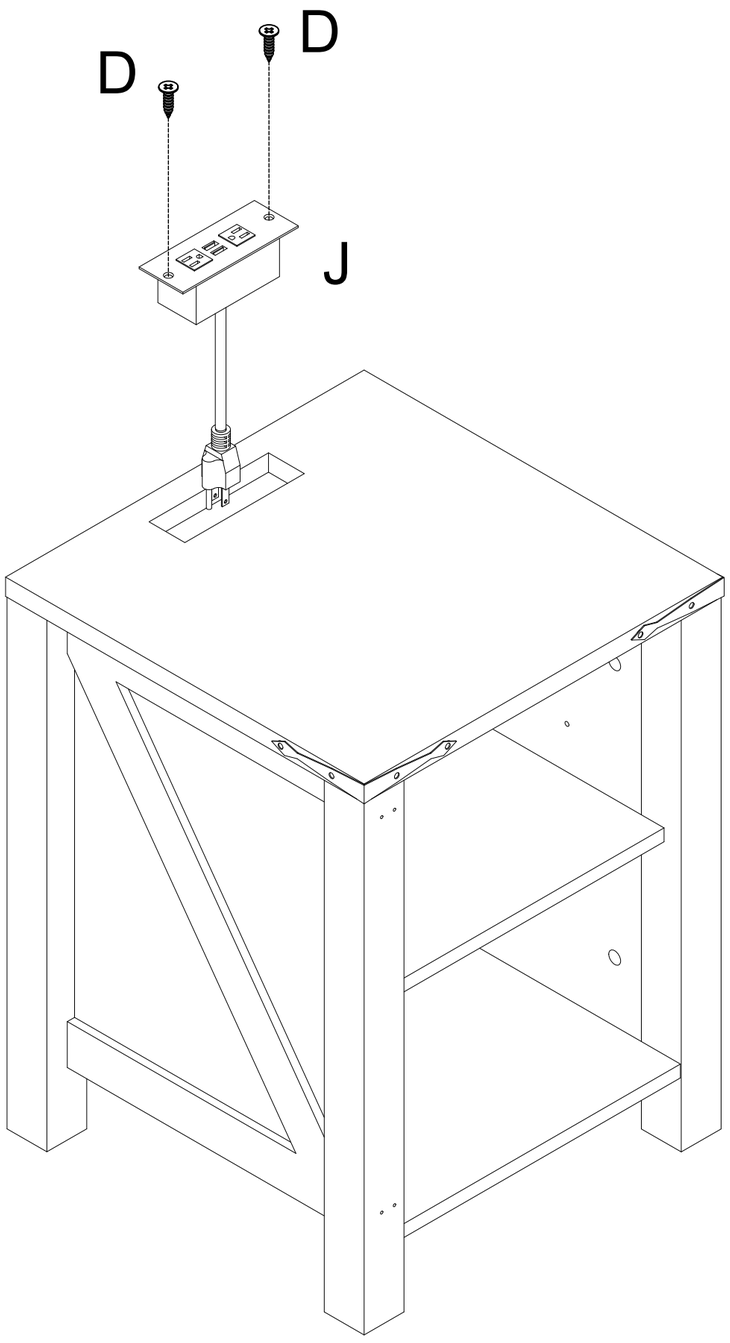

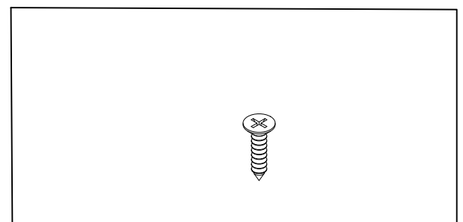

D	×2

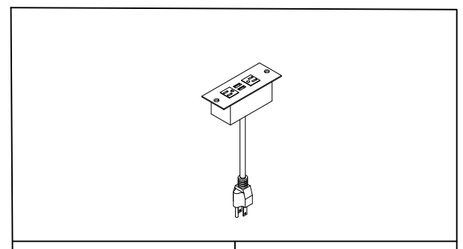

J	×1

STEP13

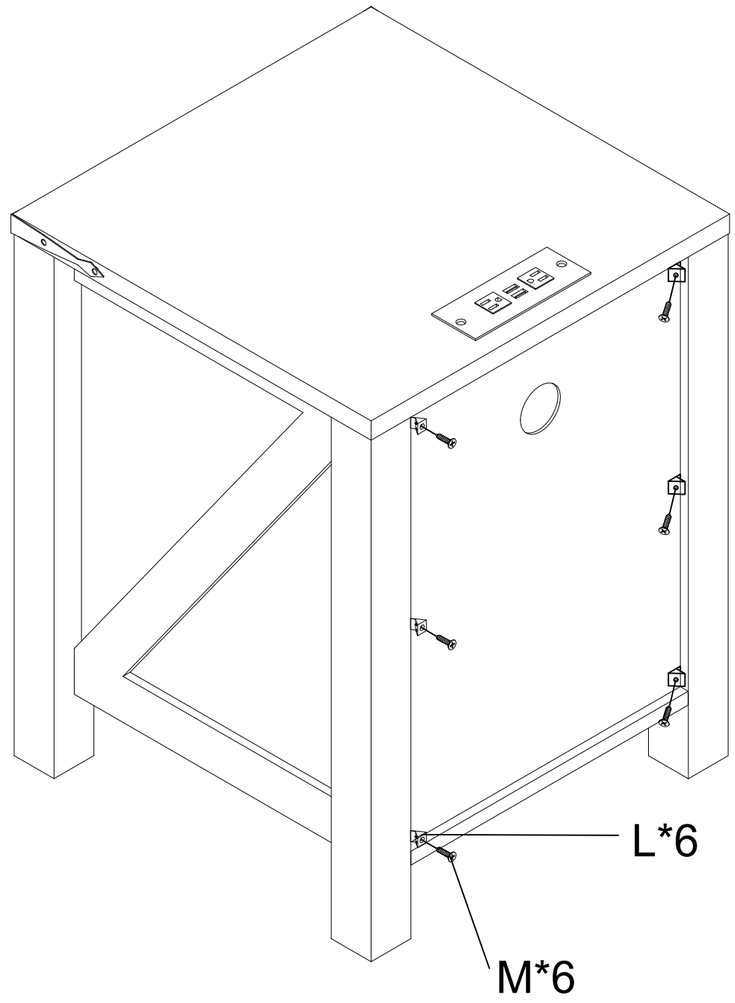

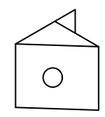	
L	×6

 Ø3*12mm	
M	×6

STEP14

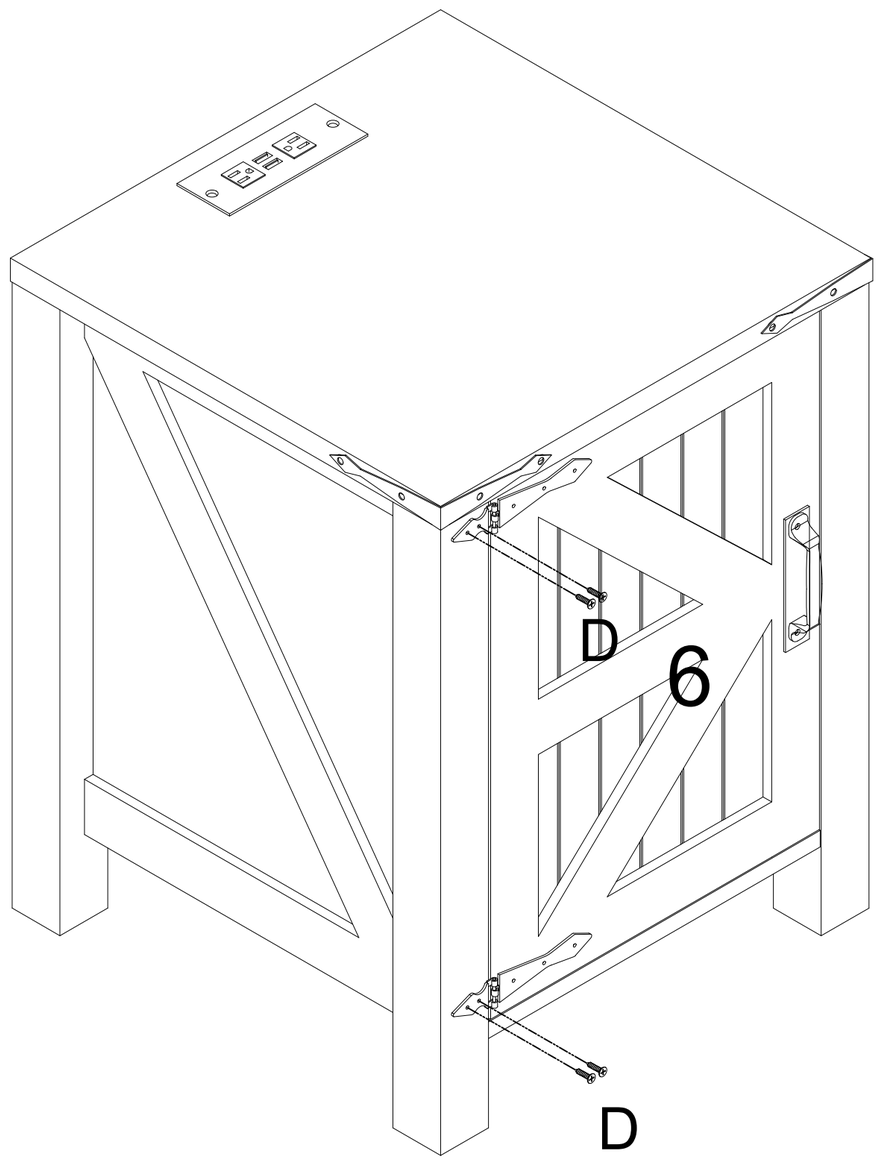

	
D	×4

STEP15

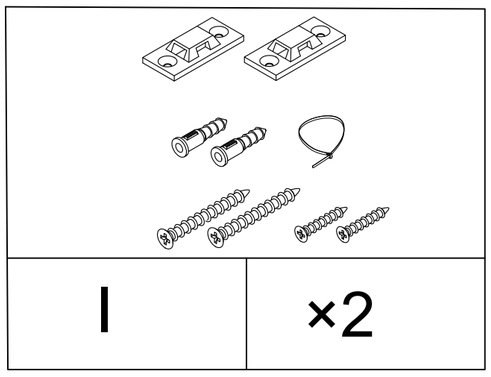

I	×2

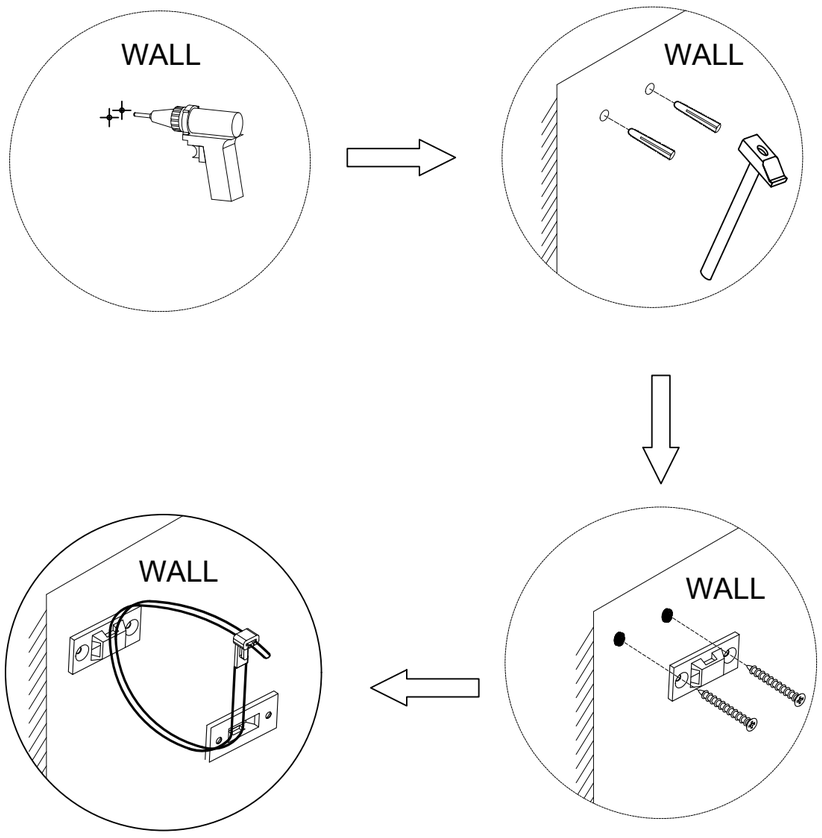

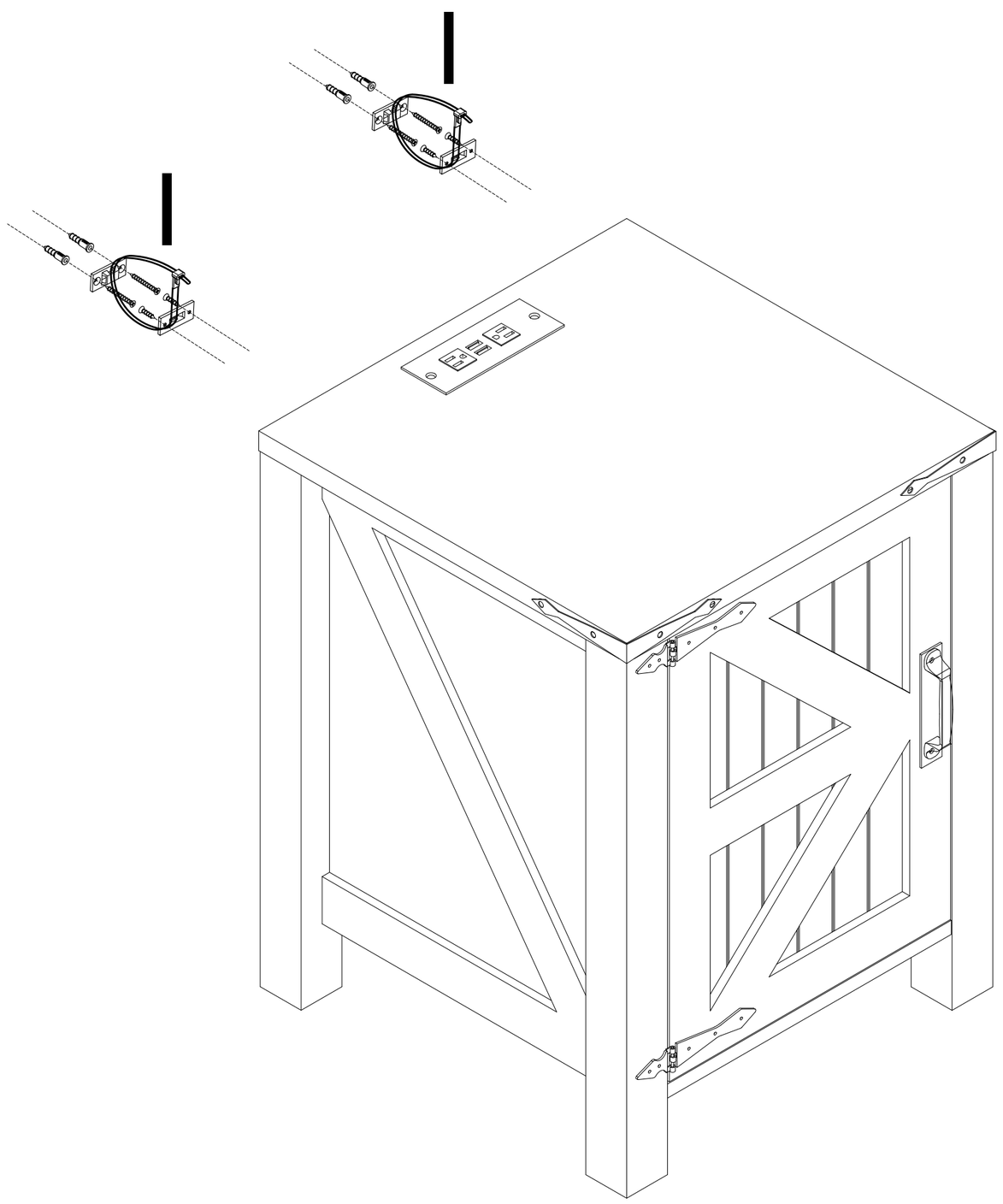

This package contains two sets of products. Follow the above installation steps to obtain both sets of products

GARVEE

support@garvee.com