Sofa

Assembly Instruction – Please keep properly for future reference.

If you find any missing boxes, damaged parts, or accessory shortages, please contact the customer service team of your purchasing channel immediately. We will resolve the issue as quickly as possible.

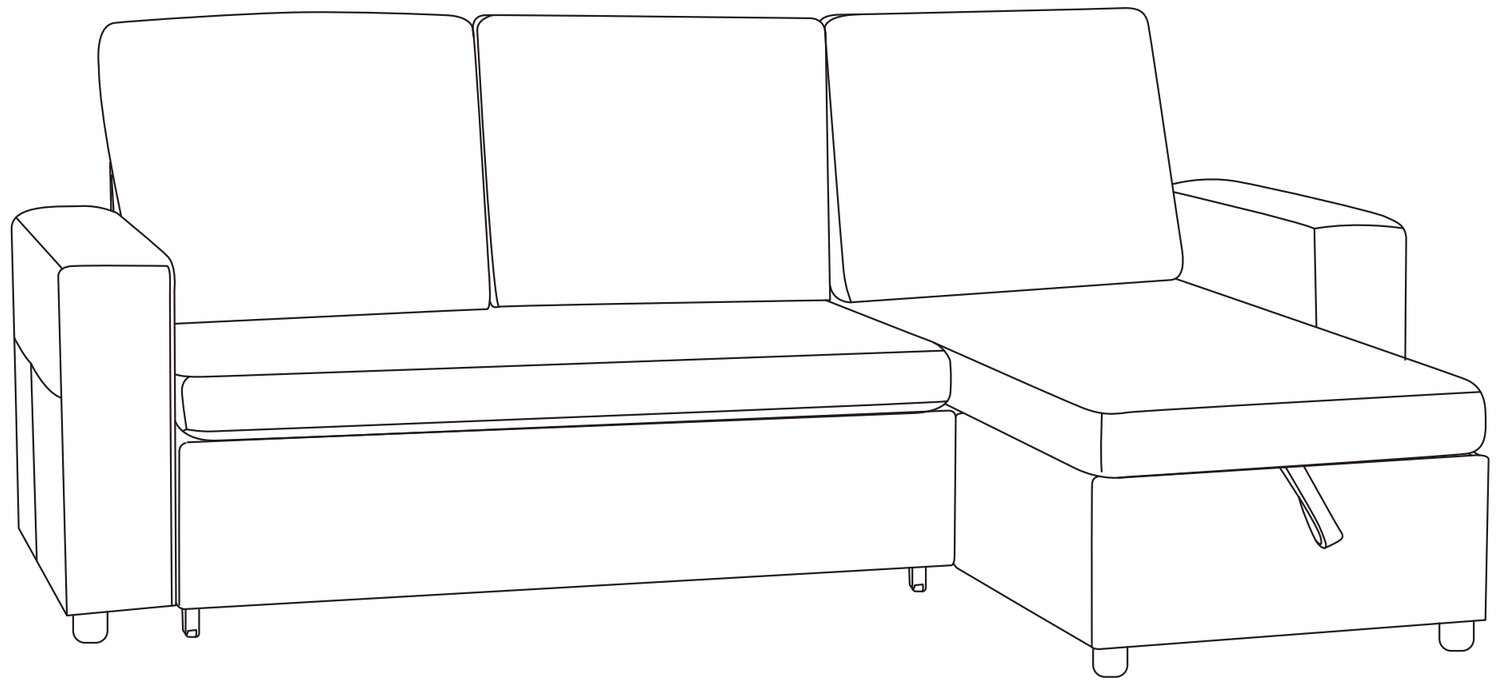

EN

THE FOLLOWING INFORMATION:

- Order number
- Purchase platform
- Purchase date
- Detailed description of the issue along with photos (if applicable)

Important – Please read these instructions carefully before starting the installation.

Before Assembly

Thank you for choosing our product!
To ensure a smooth installation process, please read this guide carefully to familiarize yourself with the required tools, materials, and installation steps.
Follow the relevant sections to avoid any damage caused by improper installation, and make sure to review all operation and safety guidelines for correct installation procedures.

Packaging Notice:

1. Multi-Box Shipping Notice

This product is packaged in 3 separate boxes for shipping and may arrive in batches at different times. To ensure a smooth assembly process, please make sure all boxes are received before unpacking and starting the installation.

2. Box and Packaging Verification

Each box is labeled with a corresponding number. Please refer to the packing list on the next page of this manual to verify that all boxes have been received.

If you find any missing boxes, damaged parts, or accessory shortages, please contact the customer service team of your purchasing channel immediately. We will resolve the issue as quickly as possible.

Installation Information

- All information in this guide is based on the product's condition at the time of printing. We reserve the right to modify product features, packaging, or availability without prior notice.
- Before installing the furniture, ensure that all necessary electrical or environmental preparations are completed.
- This manual contains important instructions on installation, cleaning, and maintenance. Please read it thoroughly and keep it for future reference.

Pre-Installation Checklist

1. Carefully inspect the new product for any damage or defects.
2. Ensure installation is carried out on a clean, flat surface to maintain balance and stability.

3. Avoid prolonged exposure of the product to damp environments or direct sunlight.
4. Handle with care during installation. Use protective materials (e.g., soft pads) to prevent scratches.
5. For any questions or technical support, refer to the customer service guide and contact the seller's customer service.

Usage and Maintenance Recommendations

1. Clean furniture regularly to maintain hygiene and prevent bacteria growth. Use a damp cloth that has been wrung out to avoid scratching the finish.
2. Avoid contact with acidic or alkaline corrosive liquids.
3. Do not use unauthorized replacement parts. For replacement parts, contact the manufacturer or distributor.
4. Do not machine wash or rinse any part of this product with water.

Safety Warnings

1. Warning Labels:

Do not remove warning labels on the product or packaging, and always follow the related instructions.

2. Regular Inspections:

Regularly check all parts of the product to ensure they are correctly installed, undamaged, and all connectors are securely tightened.

3. Safe Use:

Do not play on or under the sofa, and strictly avoid jumping or any actions that may harm the sofa or users.

4. Rope Hazard:

Do not attach ropes, hooks, straps, or other unintended items to any part of the product.

5. Guide Preservation:

Retain this manual for future reference.

6. Supervisory Responsibility:
Safety is a shared responsibility between the manufacturer and the user. Always adhere to safety guidelines when using the product.

Disclaimer

We are committed to providing safe and reliable products. If you have any questions about this product or require additional support, please contact our customer service team. We are here to assist you.

Customer Service Guide

Thank you for choosing our product! We are committed to providing you with excellent service. If you find any missing parts, damaged packaging, or product damage after receiving all packages, please follow the steps below to quickly contact our customer service team. We will do our best to resolve your issue.

1. Missing Parts

Verify Parts:

1. Refer to the “Parts List” in the manual to verify the name, specifications, and quantity of the missing parts.
2. Take a clear photo of the parts list and mark the missing parts with detailed information, e.g., “Missing 5 pieces of M6×30mm screws.”

Contact Us:

By Email:
Send an email to us, with the subject line “Missing Parts Issue.” Include the following in the email:

- A description of the missing parts and a photo of the parts list.
- Order details (order number, purchase platform, purchase date).

2. Product or Packaging Damage

If it affects normal use:

Steps:

1. Take clear photos or videos showing the damaged parts and the extent of the damage (multi-angle shots are recommended).

2. Email the photos/videos along with order details to us, with the subject line “Product Damage Issue.”

Resolution:
After verification, we will arrange for a replacement part, product exchange, or refund as quickly as possible.

If it does not affect normal use:

Steps:

1. Contact our customer service team.
2. Provide a description of the damage and include relevant photos or videos.

Resolution:
We will provide repair guidance or an appropriate compensation plan based on the specific situation.

Helpful Tips

To process your issue efficiently, please prepare the following information:

- Order details (order number, purchase platform, purchase date).
- Clear photos or videos.
- We are committed to providing quick and professional solutions, no matter the size of the issue, to ensure your satisfaction.

Thank you for your trust and support!
We hope you enjoy using our product!

Parts List

Box 1

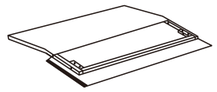

01 x1

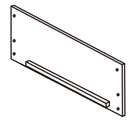

02 x1



03 x1

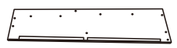

04 x1



05 x1



06 x1

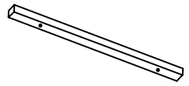

09 x2

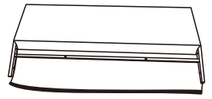

19 x1



20 x1



21 x1



25 x1

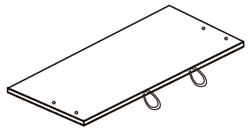

29 x1

Hardware List (in Box 1)



A M6 x1



B M6x18mm x27

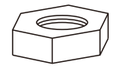

C M6 x2



D M6x18mm x28

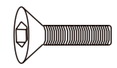

E M6x25mm x4

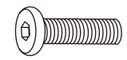

F M6x40mm x22



G M6x60mm x2

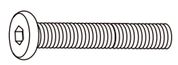

H M6x80mm x1



J M6x18mm x4

EN

Box 2

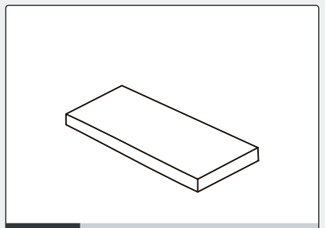

07 x1

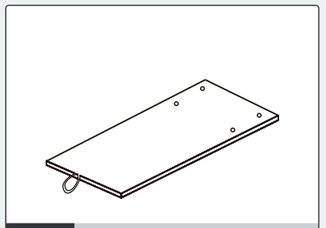

17 x1

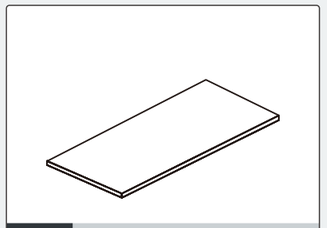

18 x1

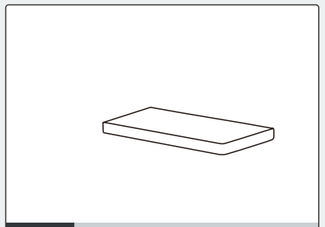

22 x1

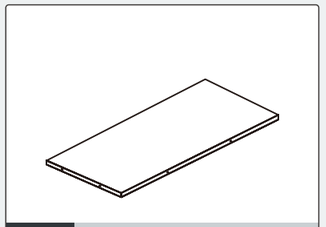

26 x1

Box 3

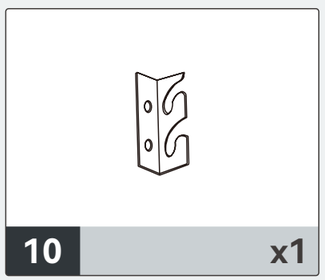

10 x1

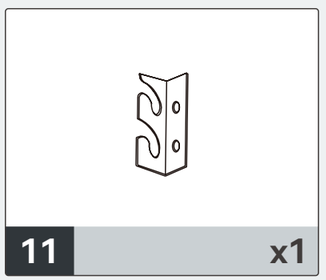

11 x1

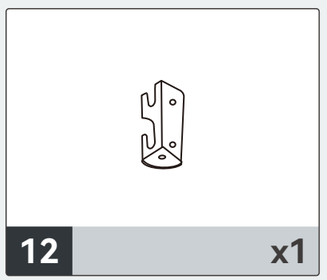

12 x1

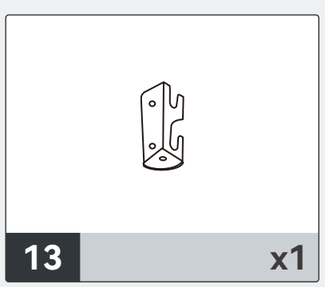

13 x1

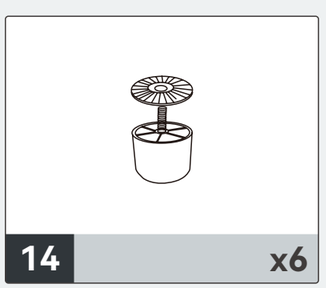

14 x6

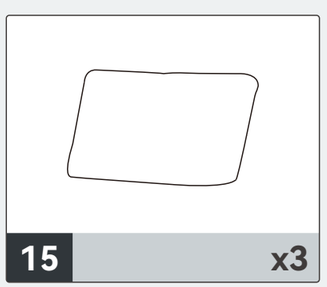

15 x3

Box 3

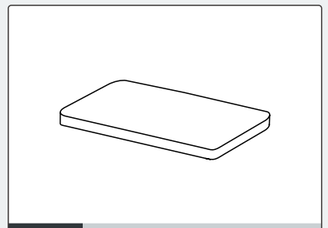

16 x1

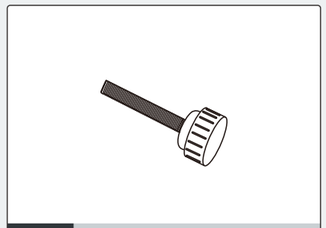

23 x2

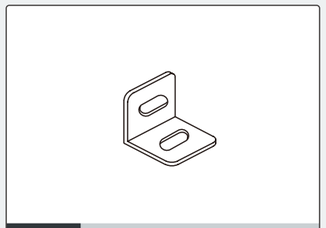

24 x2

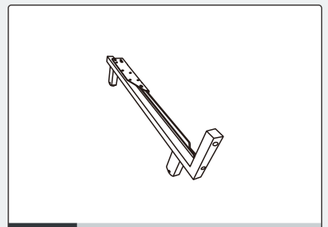

27 x1

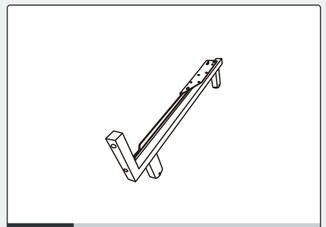

28 x1

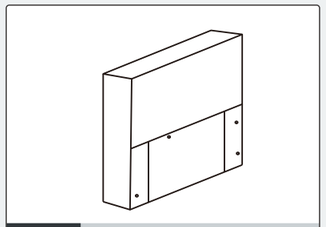

30 x1

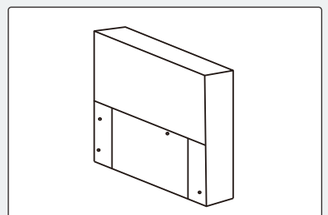

31 x1

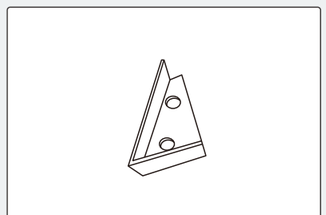

32 x1

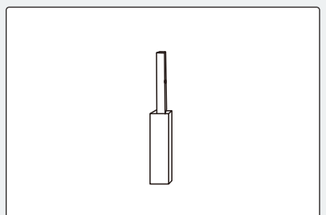

33 x1

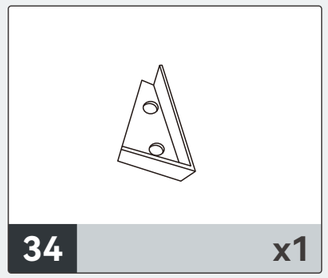

34 x1



35 x1

Exploded View

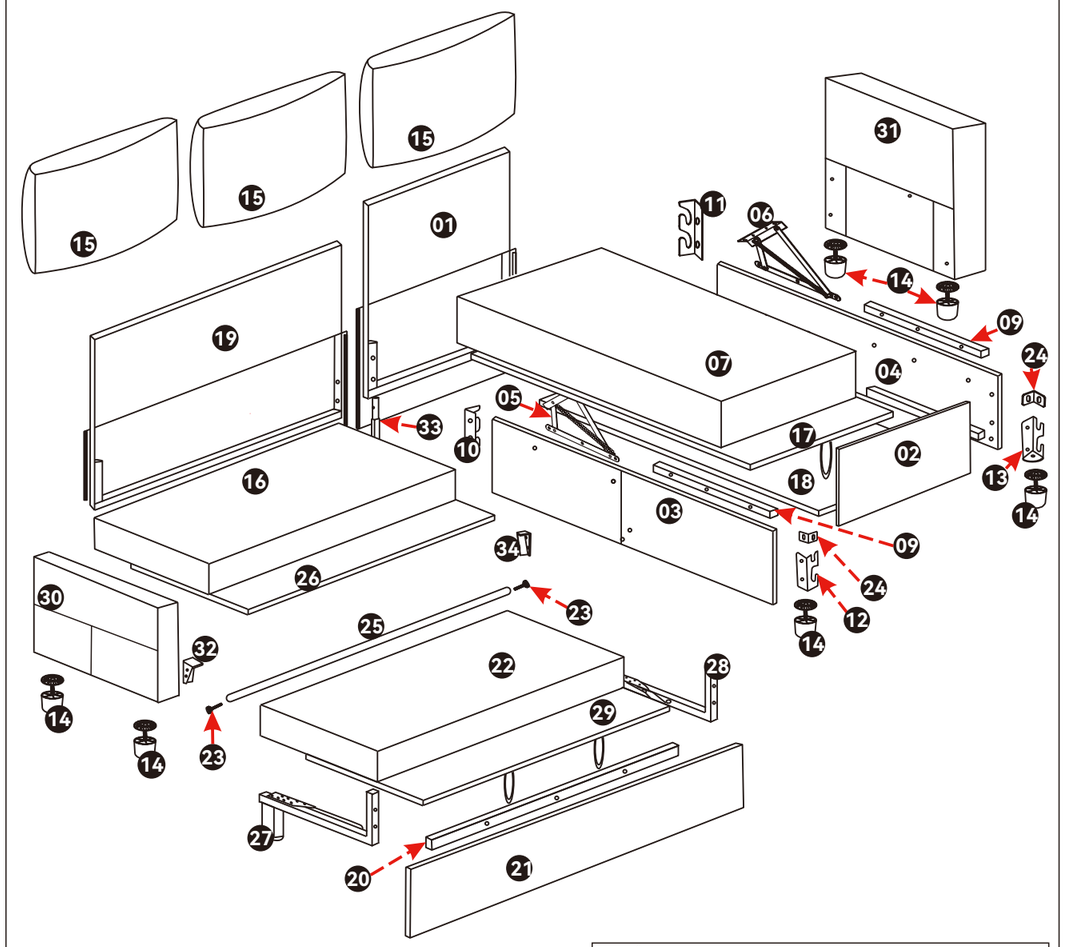

The protective fabric on the back Nylon Fastener of part 07/16/22 needs to be removed before bonding.

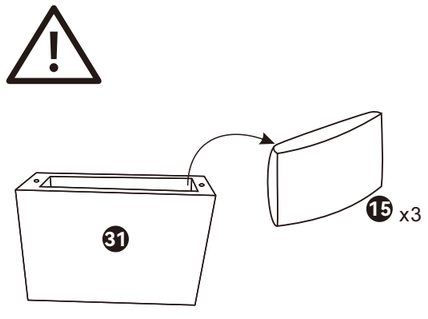

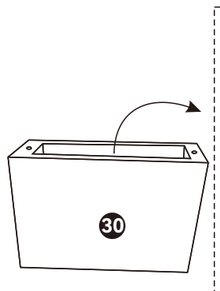

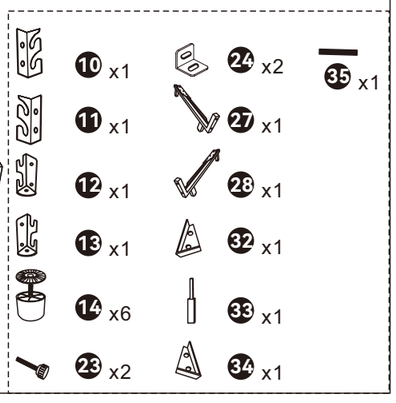

Assembly Instructions

Important : Please read these instructions fully before starting assembly.

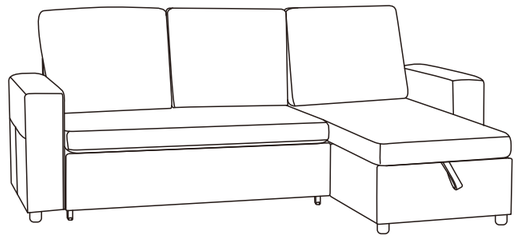

Note :

Delivered with THREE PACKAGES with THREE TRACKINGS, may NOT be deliverded at the same time.

Before starting assembly, determine where the sofa will be placed and the orientation you want it to be.



2 people needed



Work gloves



Tape measure



Other Tools Required
Phillips Screwdriver
(Not Included)

Simple Assembly Steps

1. Read the manual carefully.
2. Check all parts and hardware.
3. Prepare necessary tools.
4. Have at least two adults for assembly.

Please follow the instructions and use a sanitary napkin to protect the product during your assembly process.

Note:
1. The assembly should be done on a flat surface to maintain balance.
2. Do not tighten the screws before the assembly is complete.
To make the assembly process easier and better, two or more adults are needed.

EN

Chaise - Exploded View

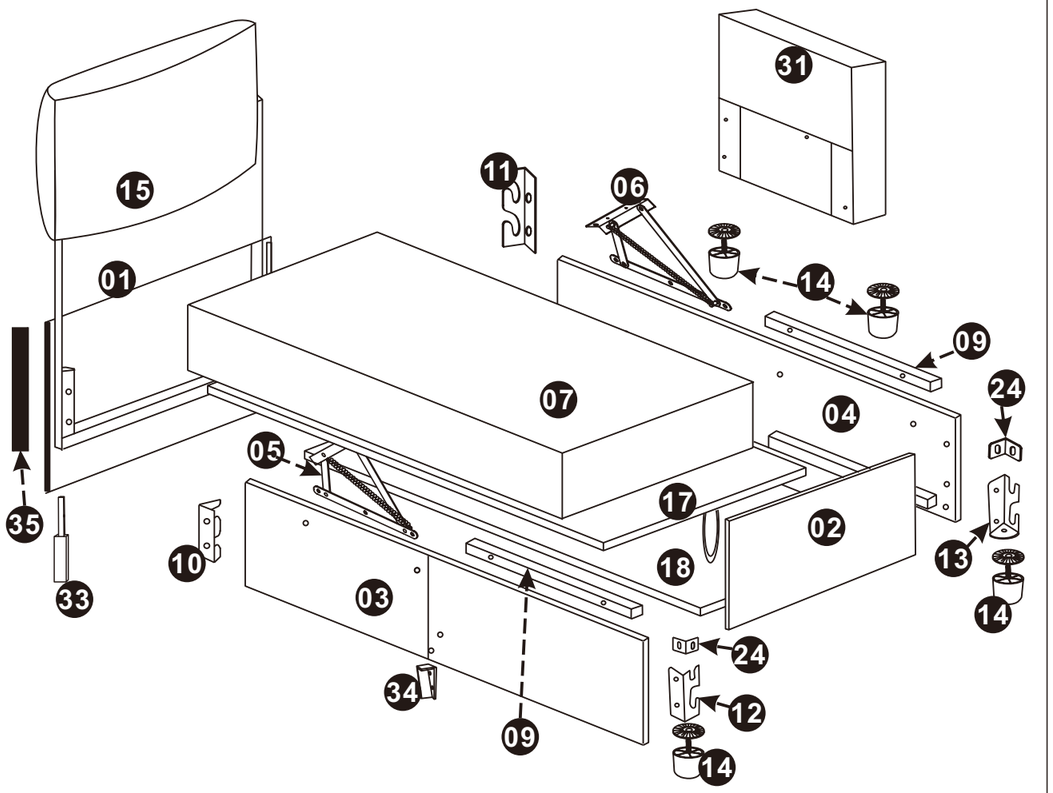

01 x1	02 x1	03 x1	04 x1	05 x1	06 x1	07 x1
09 x2	10 x1	11 x1	12 x1	13 x1	14 x4	15 x1
17 x1	18 x1	24 x2	31 x1	34 x1	33 x1	35 x1

Note: To simplify the installation process, steps 19 and 20 of this recliner assembly have been postponed to the installation sequence of the double seat. Please carefully and strictly follow the order provided in the instruction manual.

Step 1

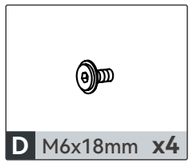

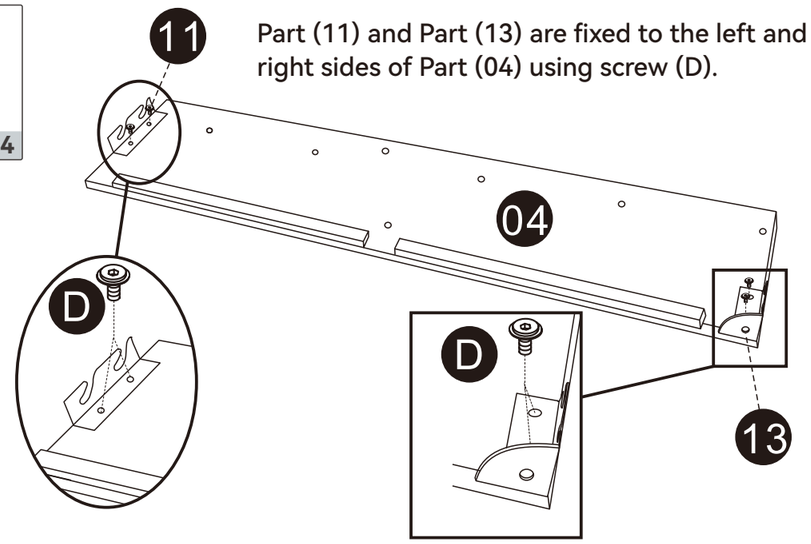

Part (11) and Part (13) are fixed to the left and right sides of Part (04) using screw (D).

Note: Pay attention to the orientation of the hanging pieces of Parts (11) and (13); during installation, tighten screw (D) to 70%, do not fully tighten the screw, to facilitate subsequent assembly.

Step 2

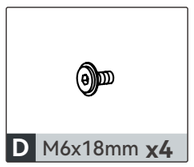

Part (10) and Part (12) are fixed to the left and right sides of Part (03) using screw (D).

Note: Pay attention to the orientation of the hanging pieces of Parts (10) and (12); during installation, tighten screw (D) to 70%, do not fully tighten the screw, to facilitate subsequent assembly.

Step 3

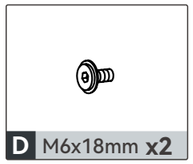

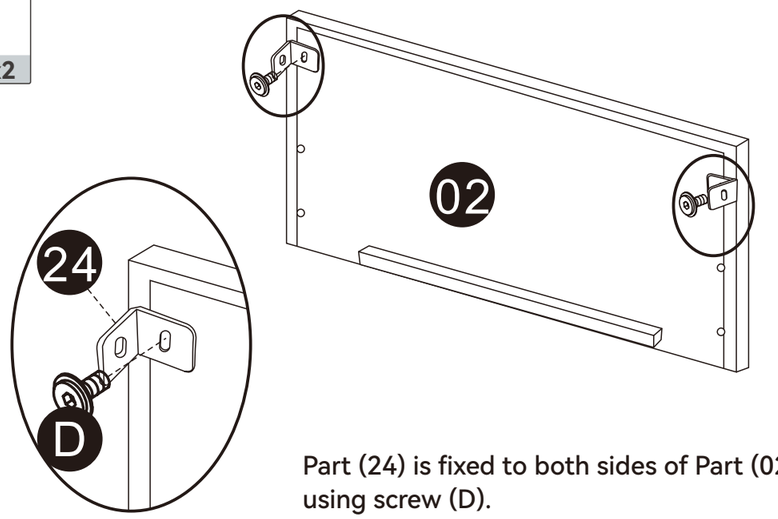

Part (24) is fixed to both sides of Part (02) using screw (D).

Note: The orientation of Part (02).

Step 4

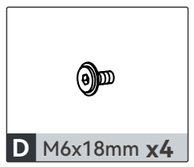

Part (10) on Part (03) and Part (11) on Part (04) are fixed to Part (01) using screw (D).

Note: During installation, first attach all screws, then including the previously partially tightened screws, tighten them all completely.

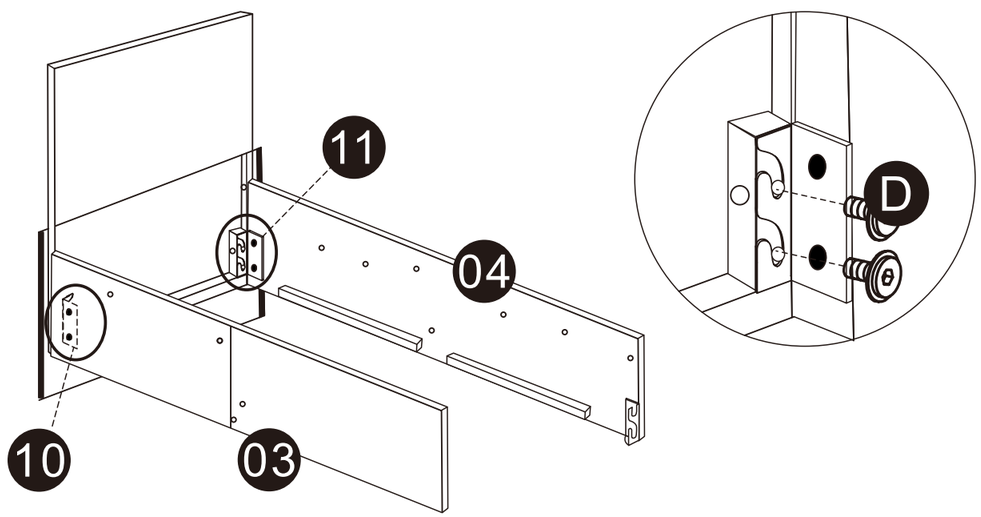

Step 5

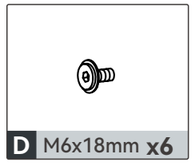

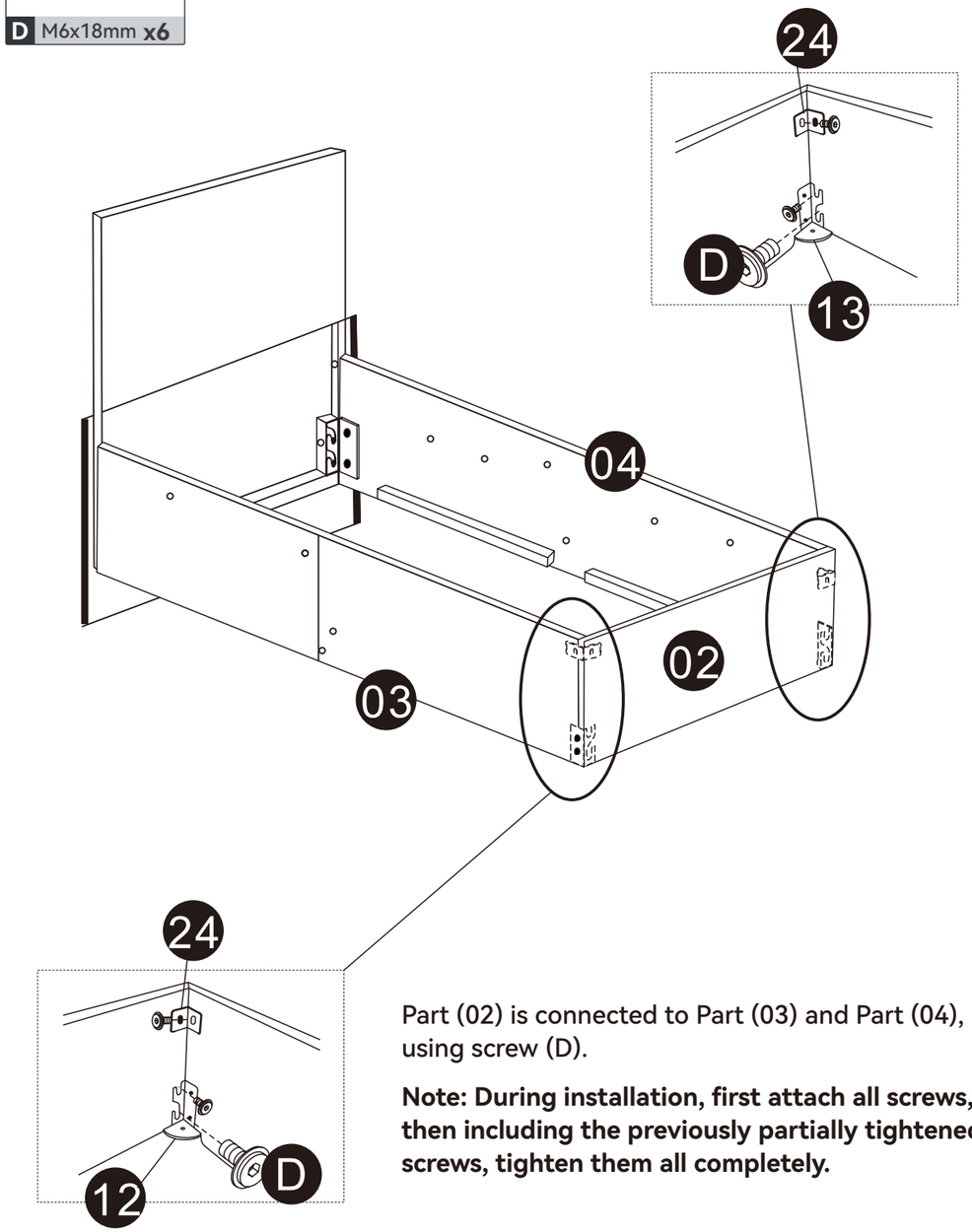

Part (02) is connected to Part (03) and Part (04), using screw (D).

Note: During installation, first attach all screws, then including the previously partially tightened screws, tighten them all completely.

Step 6

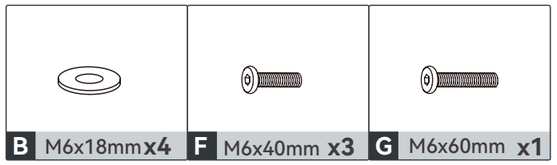

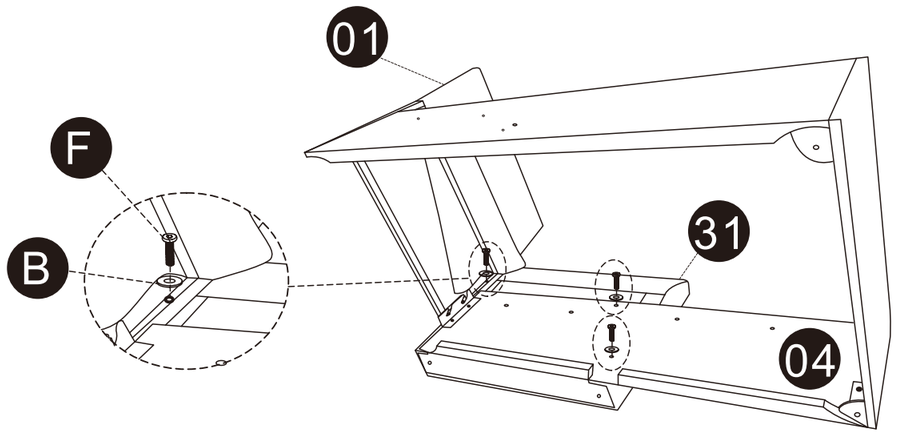

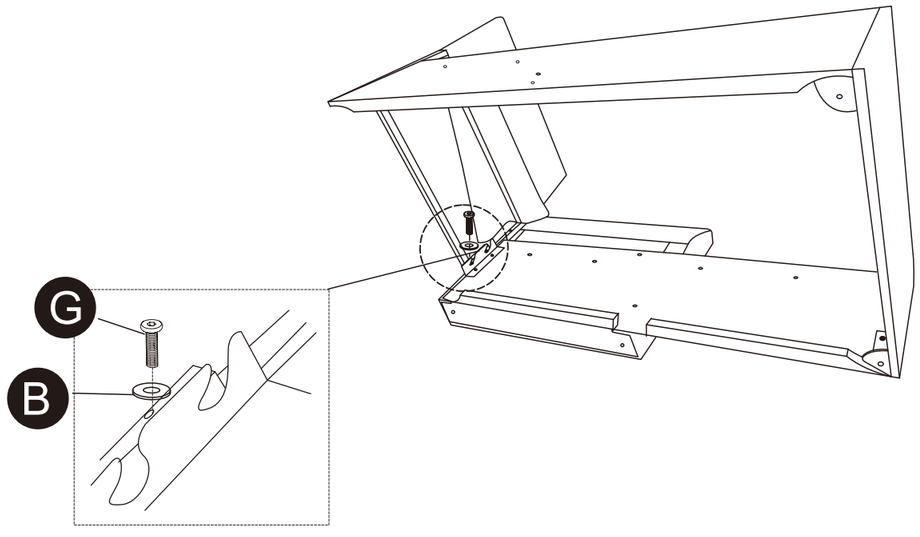

Part (31) is connected to Part (04). Fix using screw (F) with washer (B) and screw (G) with washer (B).

Note: 1. During installation, first tighten to 70%, then tighten completely. 2. Screw (F) is at the upper position, screw (G) is at the lower position.

Step 7

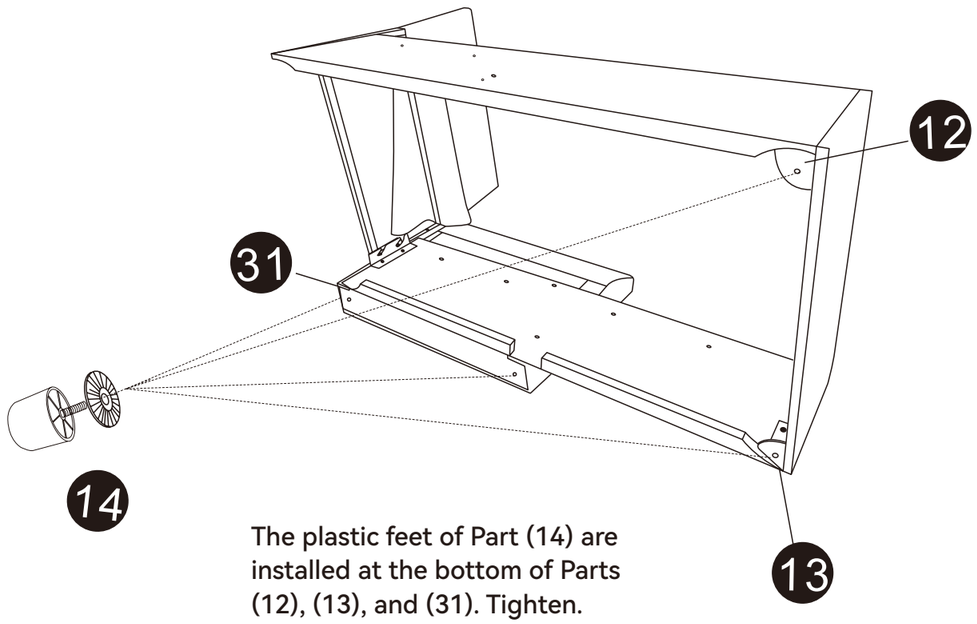

The plastic feet of Part (14) are installed at the bottom of Parts (12), (13), and (31). Tighten.

Step 8

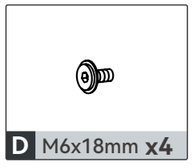

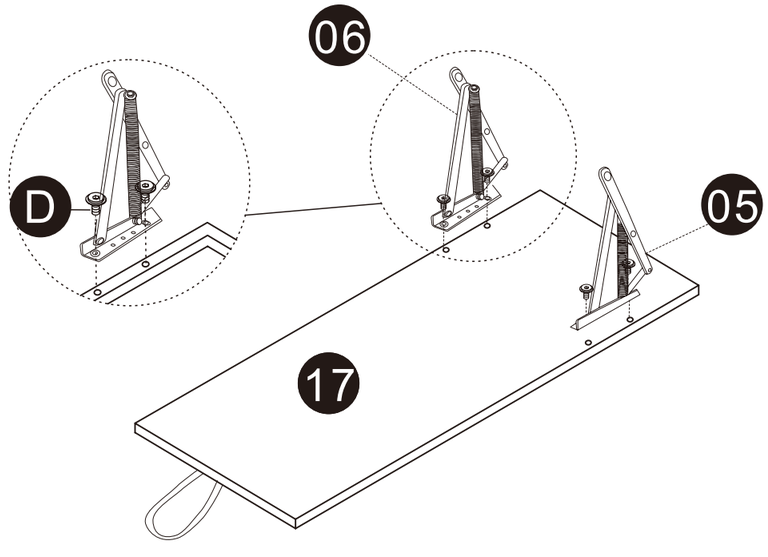

Part (05) and Part (06) are fixed to Part (17) using screw (D).

Note: Parts (05) and (06) have a specific working direction; do not install them incorrectly. First tighten to 70%, then tighten completely.

Step 9

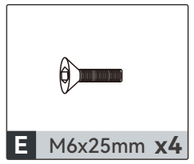

Part (05) is connected to Part (03), and Part (06) is connected to Part (04), using screw (E).

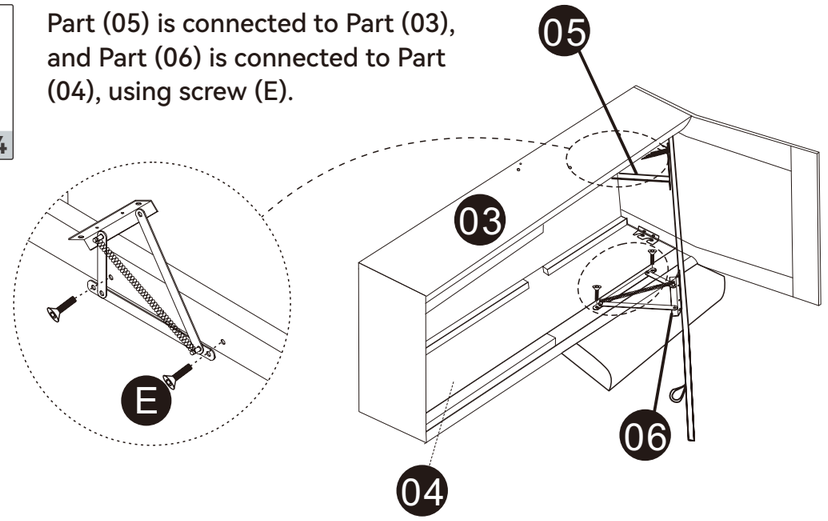

Note:

1. **Screw (E) is a flat-head screw; do not mistake it. After tightening, the screw must be flush to avoid friction and obstruction when the seat frame is raised or lowered.**
2. **During installation, first tighten to 70%, then tighten completely.**

Step 10

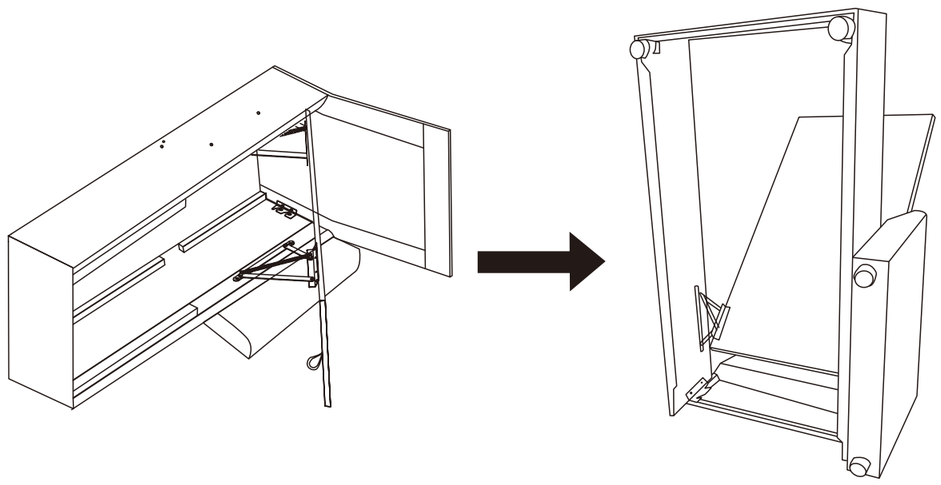

The chaise lounge section assembly is completed. Place it as shown in the diagram for convenient installation in subsequent steps. Next, begin installing the two-seater section.

2 - Seater - Exploded View

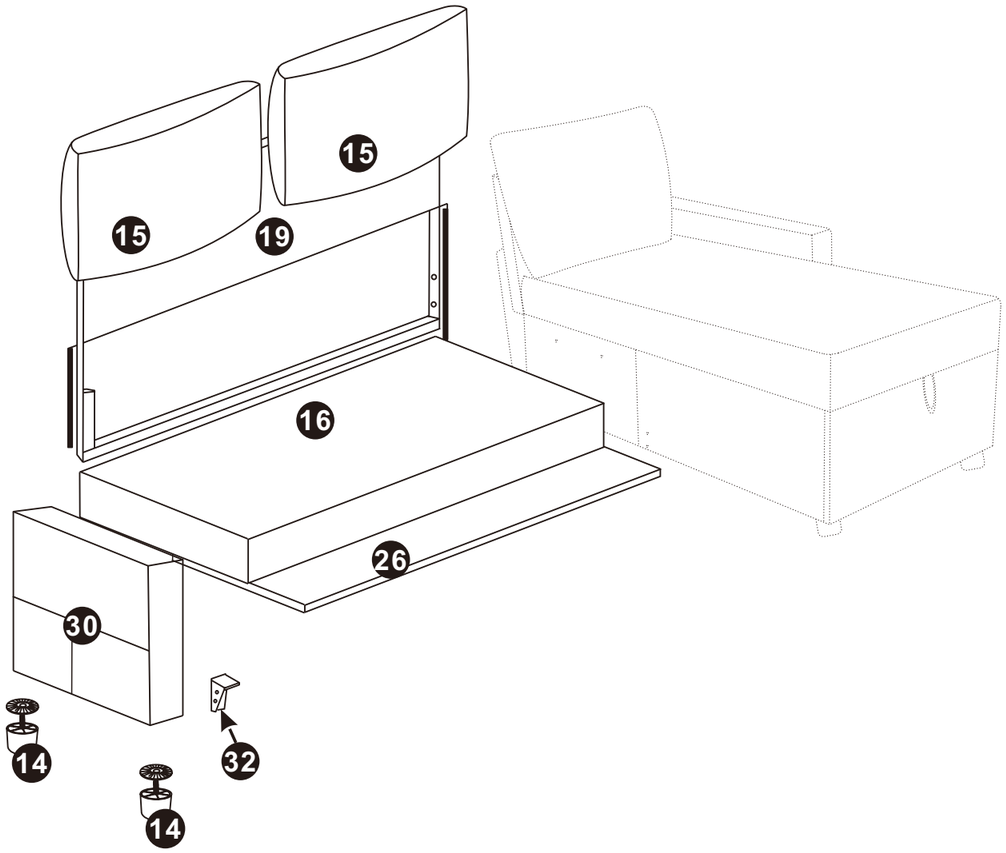

	14  x2	15  x2	16  x1	19  x1	26 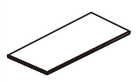 x1
30 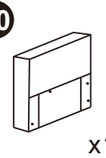 x1	32  x1				

Step 11

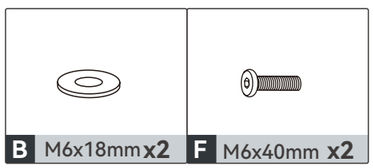

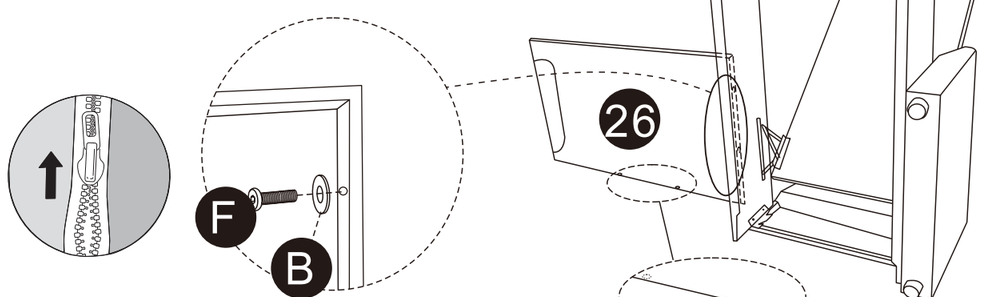

After unzipping the zip on the right side of Part (26), connect it to Part (03) and fix using screw (F) and washer (B).

Note: During installation, tighten screw (F) to 70%, do not fully tighten the screw, to facilitate subsequent assembly.

When installing part 26, pay attention to the hole positions of part 26.

Step 12

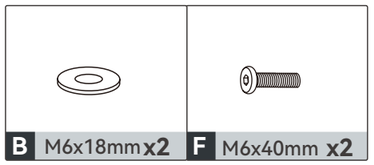

After unzipping the zip on the left side of Part (26), connect it to Part (30) and fix using screw (F) and washer (B).

Note: During installation, tighten screw (F) to 70%, do not fully tighten the screw, to facilitate subsequent assembly.

Step 13

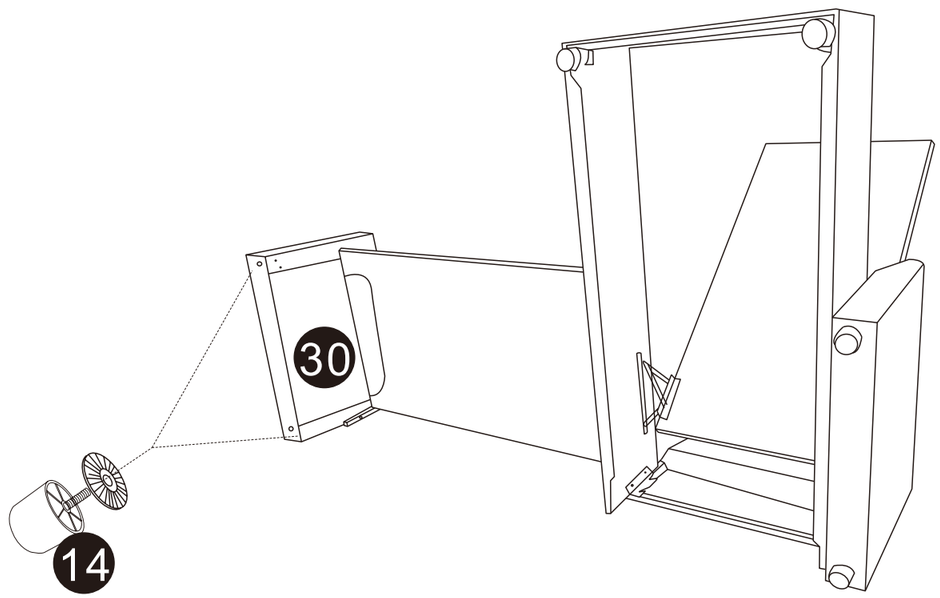

Install Part (14) onto Part (30) and tighten.

Step 14

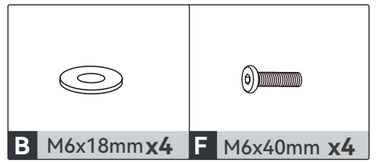

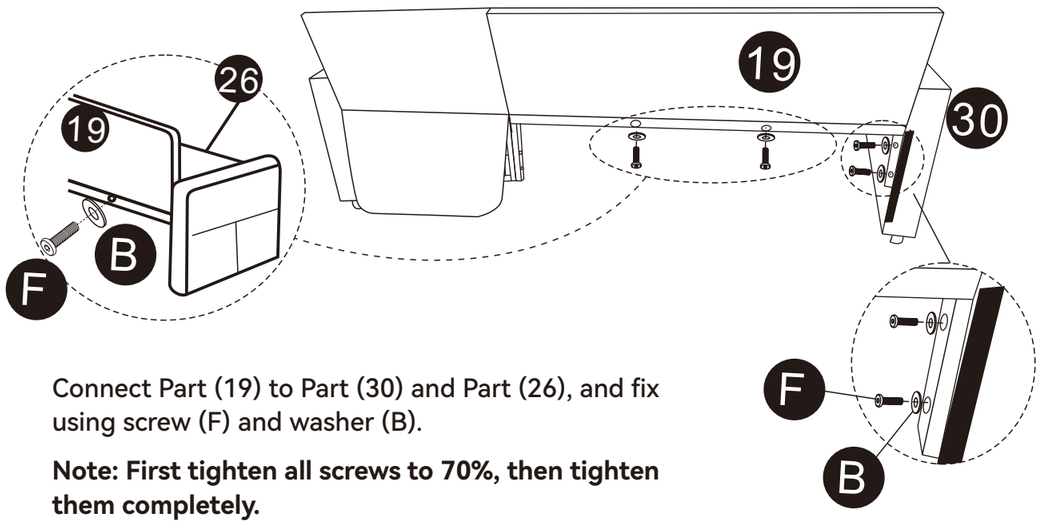

Connect Part (19) to Part (30) and Part (26), and fix using screw (F) and washer (B).

Note: First tighten all screws to 70%, then tighten them completely.

Step 15

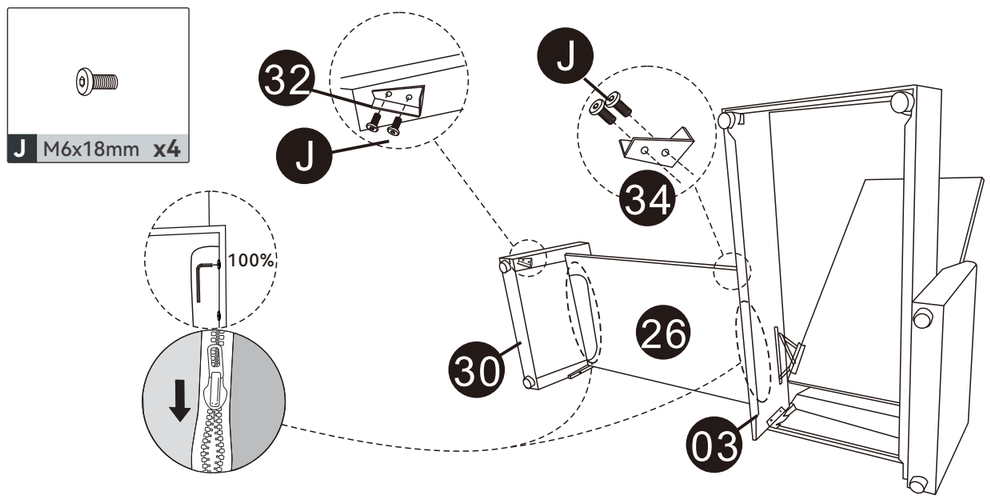

1. Fully tighten all the previously partially tightened screws on both sides of Part (26), and zip up the zip.
2. Install Part (32) onto Part (30); install Part (34) onto Part (03), using screw (J).

Note: The hardware fittings of Parts (32) and (34) have a specific direction; do not install them in the opposite direction.

Step 16

Insert Part (33) into the iron tube of Part (01), ensuring that the holes of the two iron tubes are aligned.

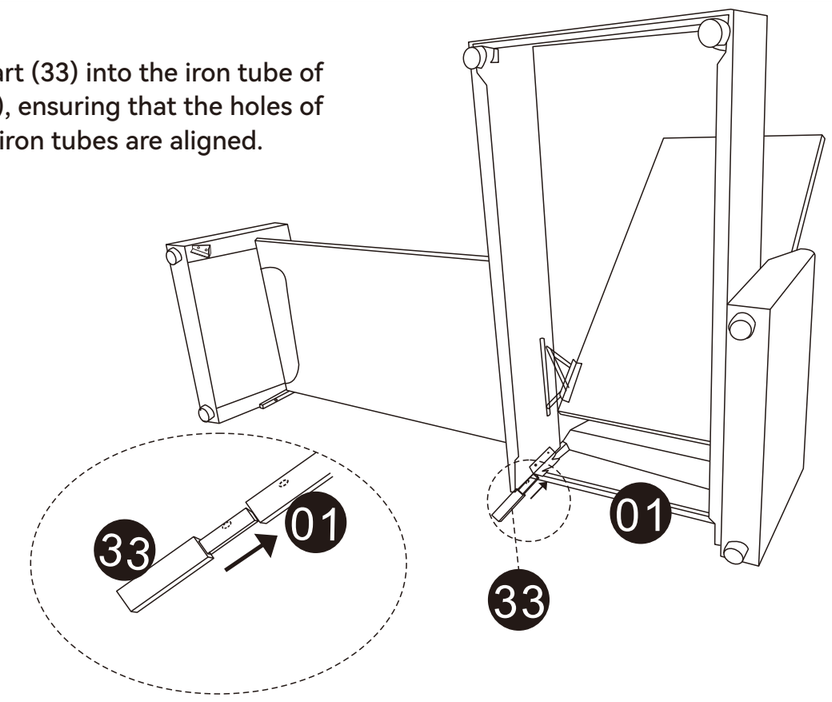

Step 17

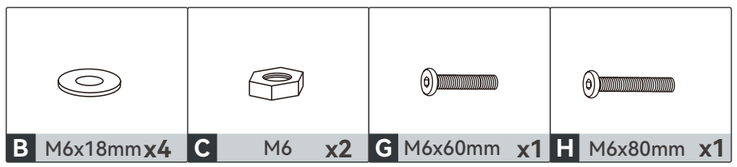

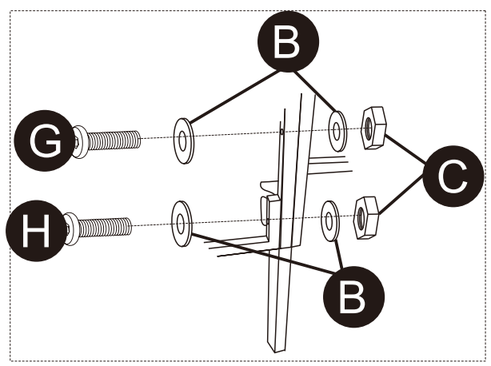

Note: First attach all screws, then tighten them all completely.

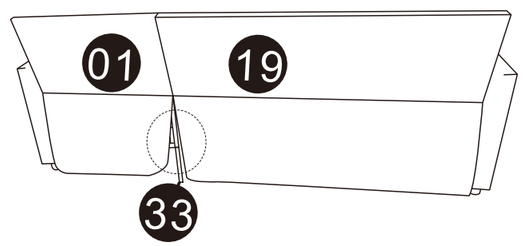

Connect and fix Parts (01), (19), and (33) using screw (G) and washer (B) on one side, and nut (C) with washer (B) on the other side. Also, use screw (H) and washer (B) on one side, and nut (C) with washer (B) on the other side.

Step 18

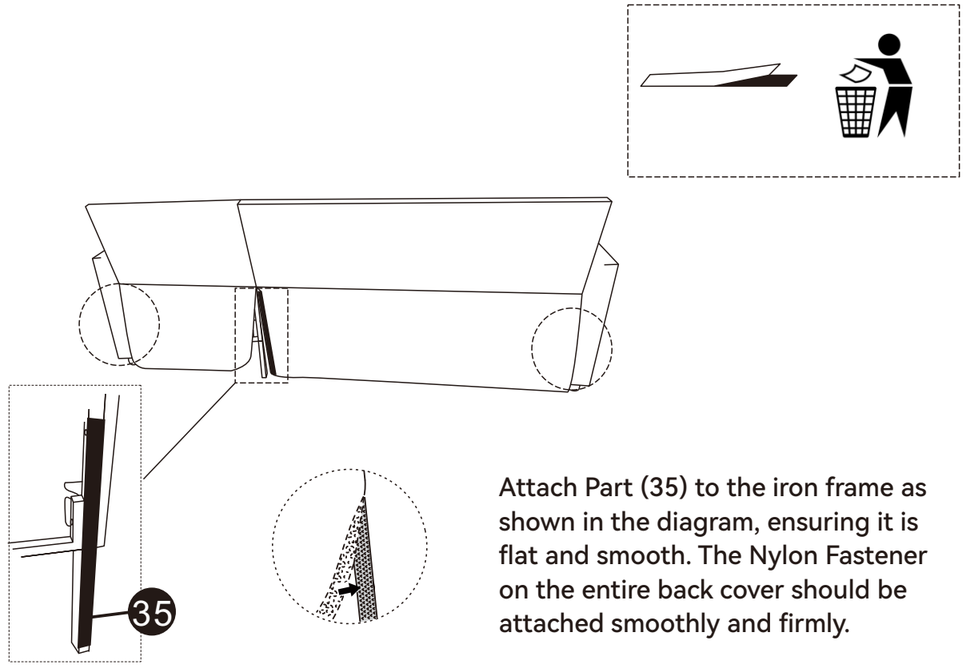

Attach Part (35) to the iron frame as shown in the diagram, ensuring it is flat and smooth. The Nylon Fastener on the entire back cover should be attached smoothly and firmly.

Step 19

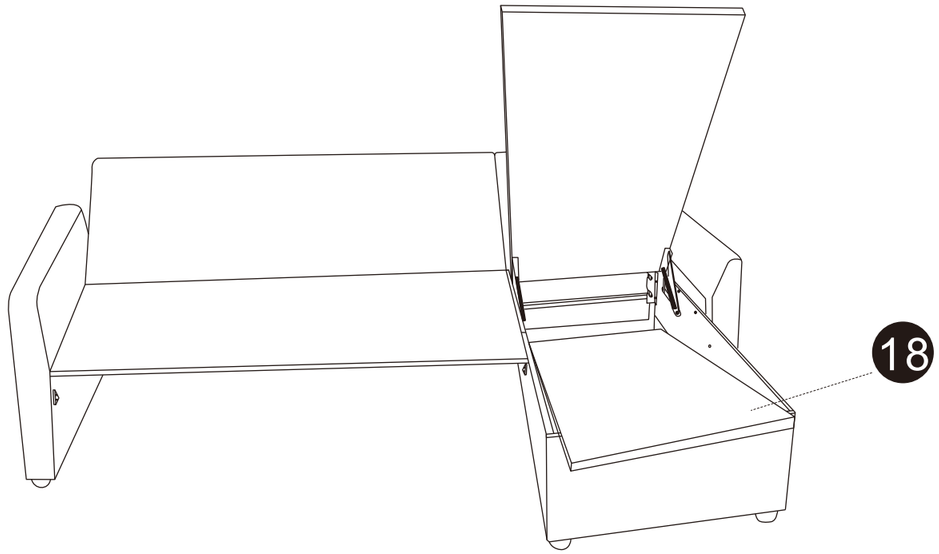

Place Part (18) diagonally into position and lay it flat on the bottom of the frame.

Step 20

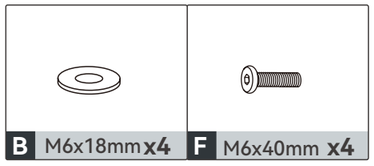

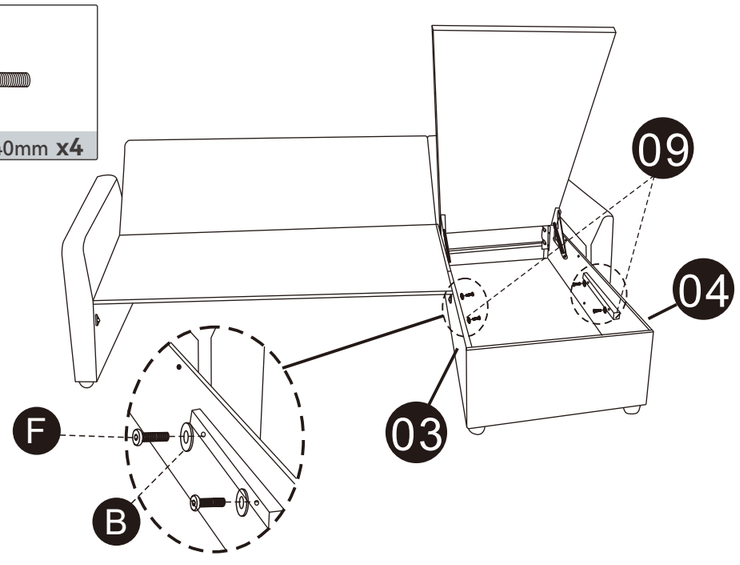

Install Part (09) onto the inner side of the side panels of Parts (03) and (04), using screw (F) with washer (B).

Note: First tighten to 70%, then tighten completely.

Step 21

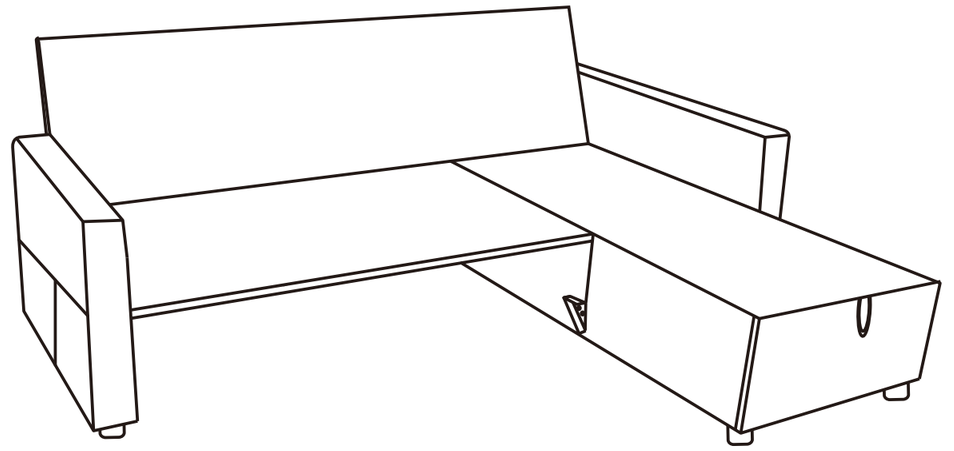

The chaise lounge section and the two-seater section have been assembled.
Next, begin installing the pull-out bed section.

Pull - out Bed - Exploded View

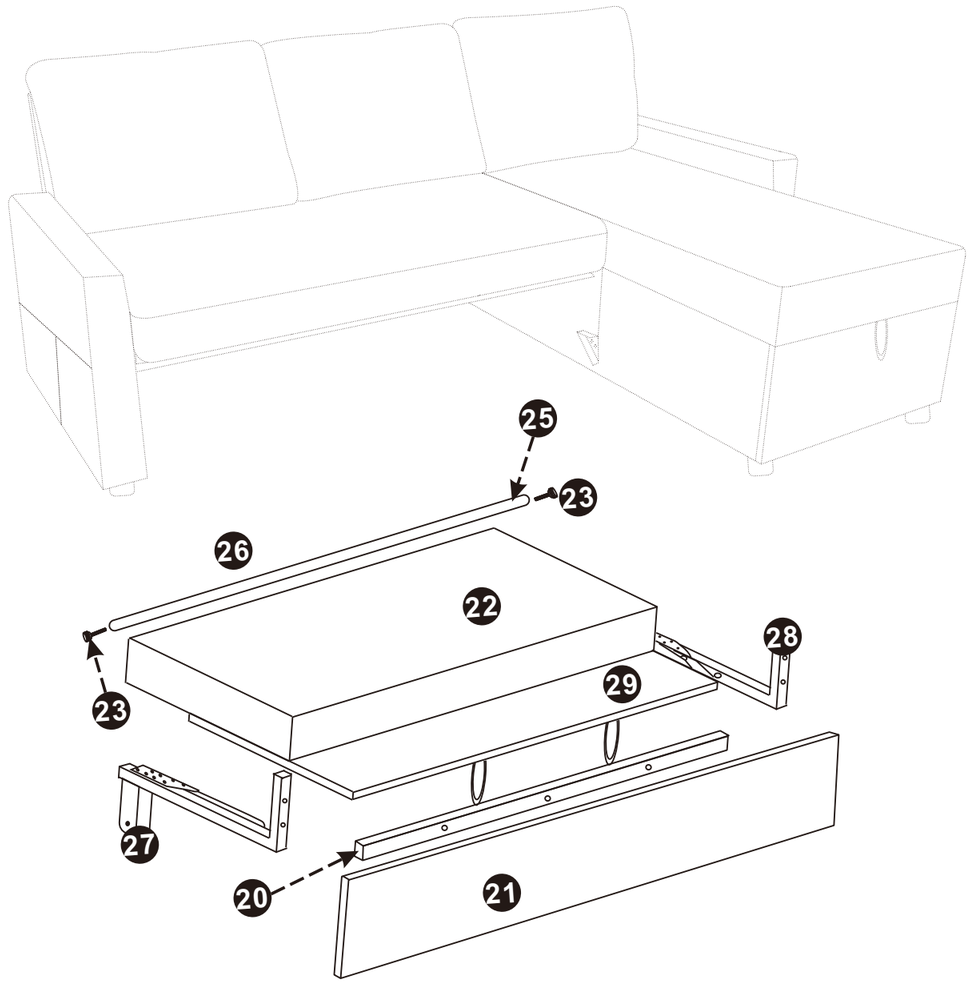

	20 x1	21 x1	22 x1	23 x2	25 x1	26 x1
27 x1	28 x1	29 x1				

Step 22

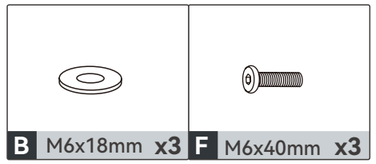

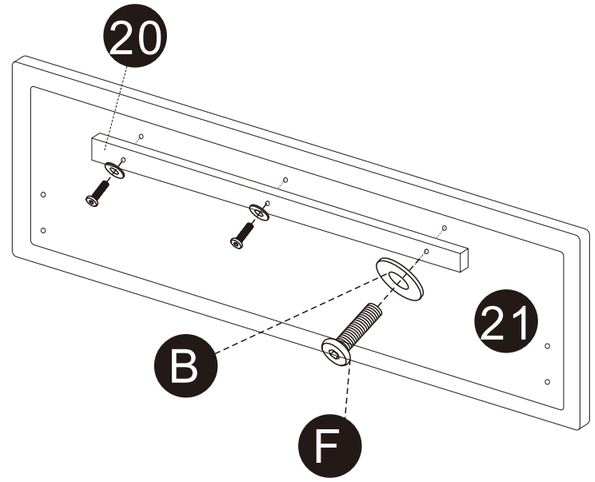

Install Part (20) onto Part (21) using screw (F) and washer (B).

Note: First tighten all screws to 70%, then tighten them completely.

Step 23

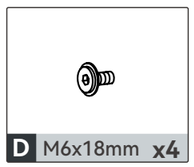

Expand the hardware frames of Parts (27) and (28) as shown in the diagram, install them onto Part (29) using screw (D).

Note: Parts (27) and (28) have left and right directions; the installation direction must match the diagram. First tighten all screws to 70%, then tighten them completely.

Step 24

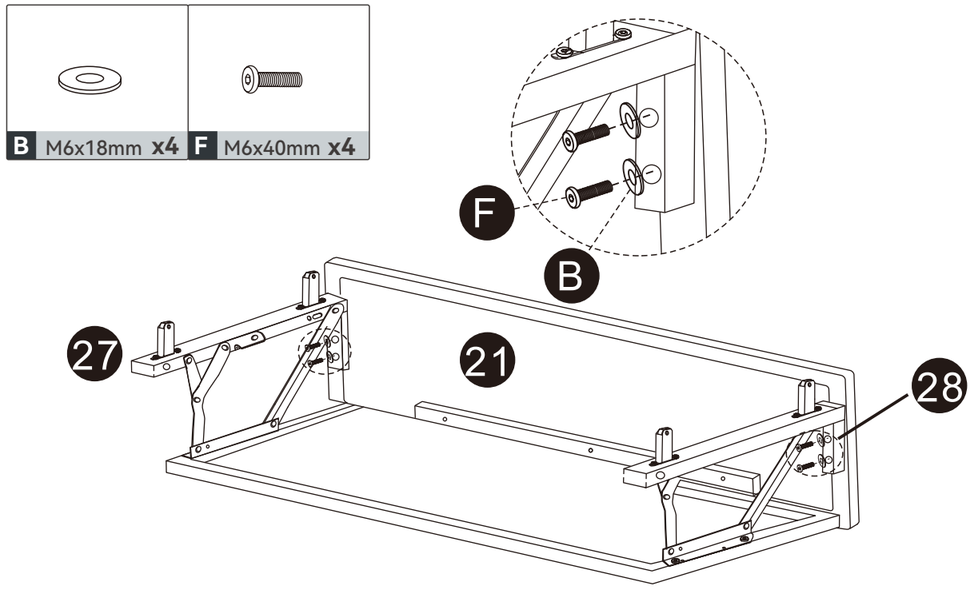

Install Parts (27) and (28) onto Part (21) using screw (F) and washer (B).

Note: First tighten all screws to 70%, then tighten them completely.

Step 25

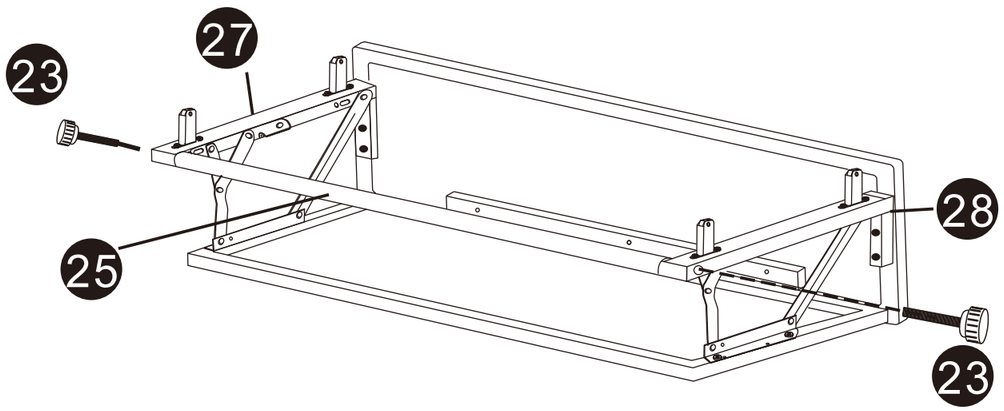

Connect Part (25) to Parts (27) and (28), and secure using Part (23).

Note: Part (23) must be tightened firmly.

Step 26

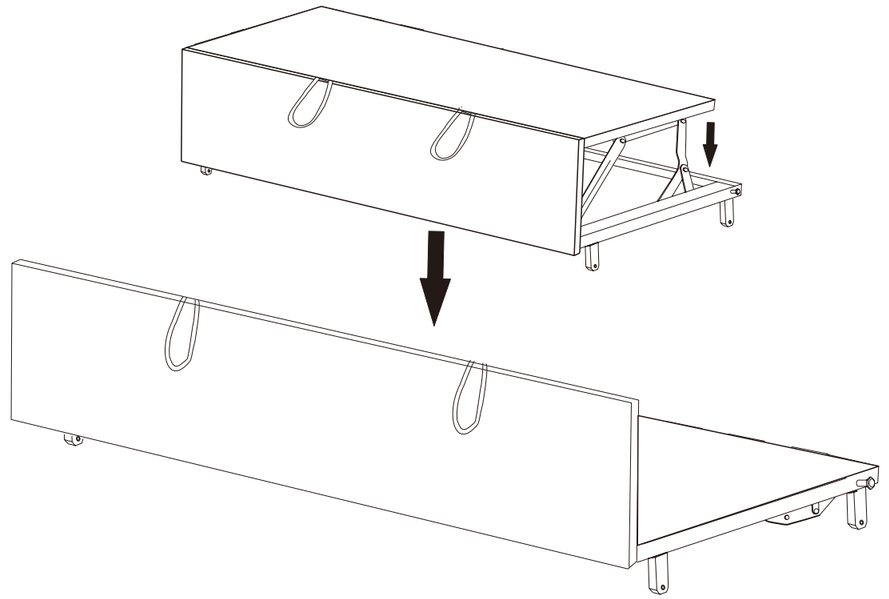

Lower the baseboard of the pull-out bed.

Step 27

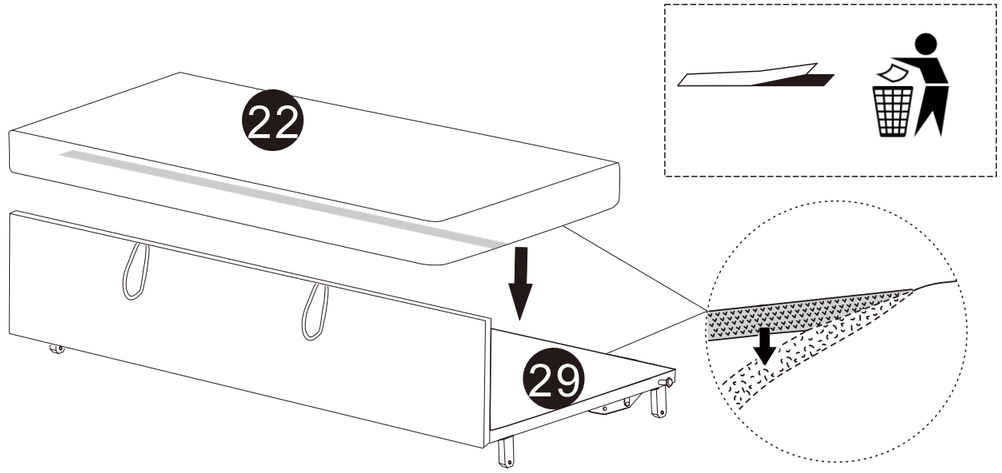

Tear off the protective cloth on the back of the Part (22) cushion.
Place Part (22) on Part (29).

Note: The cushion should be positioned evenly on both sides to avoid collisions after placement.

Step 28

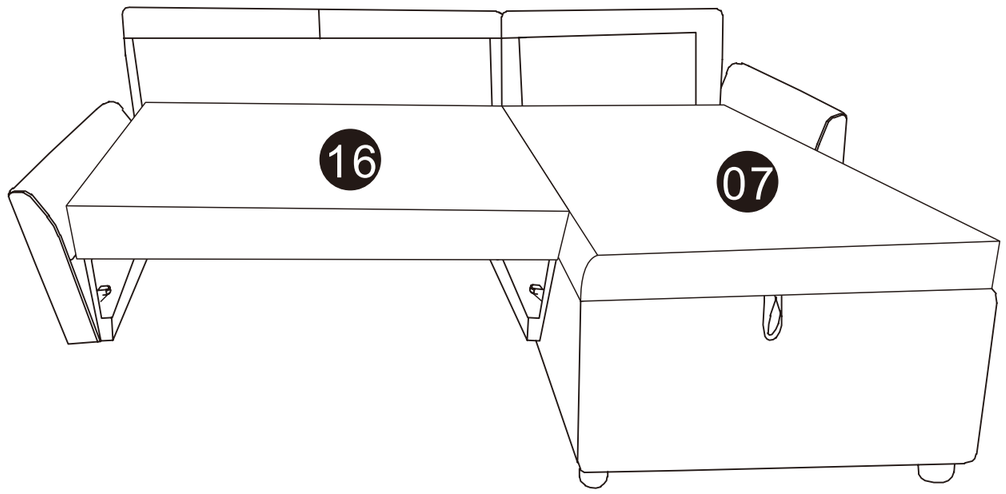

Place the cushions of Parts (07) and (16)
in the positions shown in the diagram.

Step 29

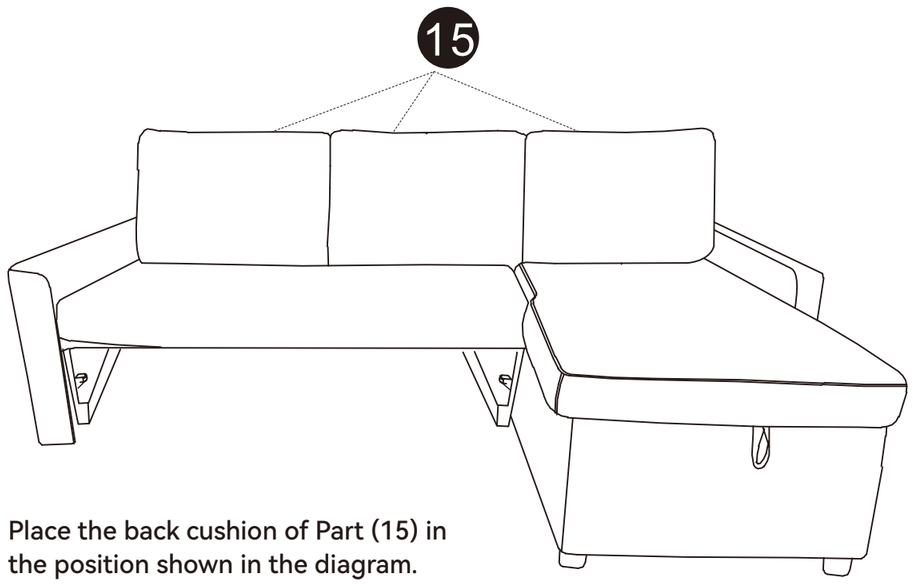

Place the back cushion of Part (15) in
the position shown in the diagram.

Step 30

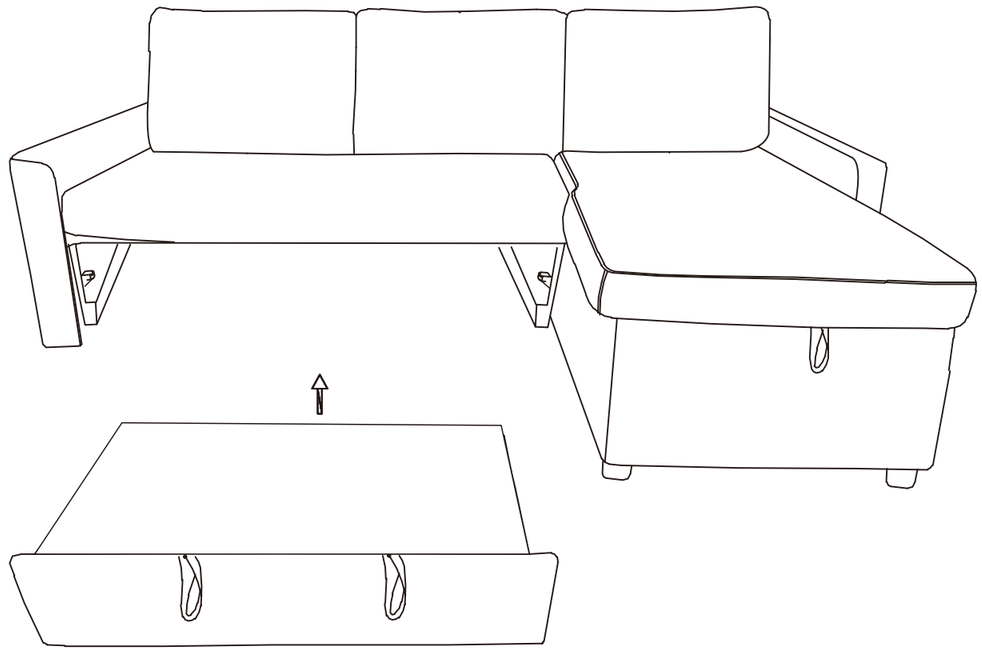

Insert the pull-out bed. If the cushion of the pull-out bed is
not positioned evenly on both sides, it can be readjusted.
Installation completed.

Step 31

Instructions for using the pull-out bed:

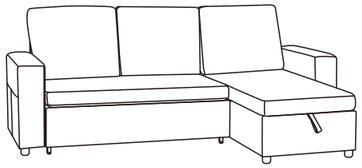



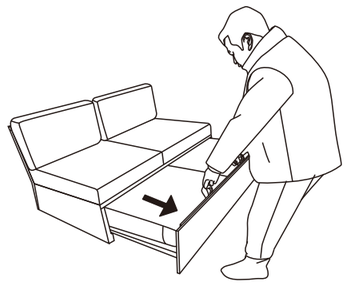

1

Part (11) and Part (13) are fixed to the left and right sides of Part (04) using screw (D).

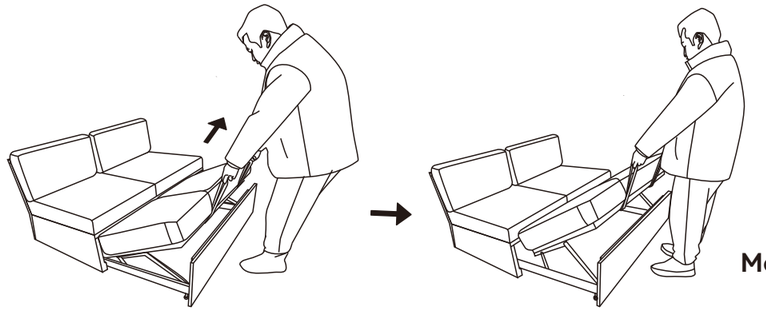

Move up to the top

2 Pull the pull straps diagonally upwards with both hands until they reach the end.

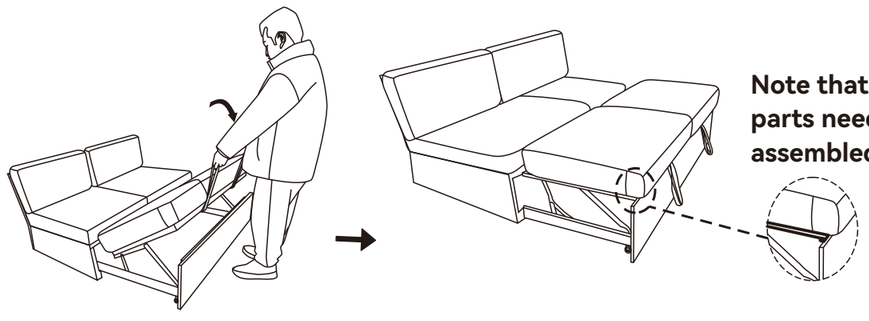

Note that the bold parts need to be assembled together.

3 Then press down and forward, and finally push forward, so that the seat frame rests on the wooden slats. As shown in the diagram.

Maintenance

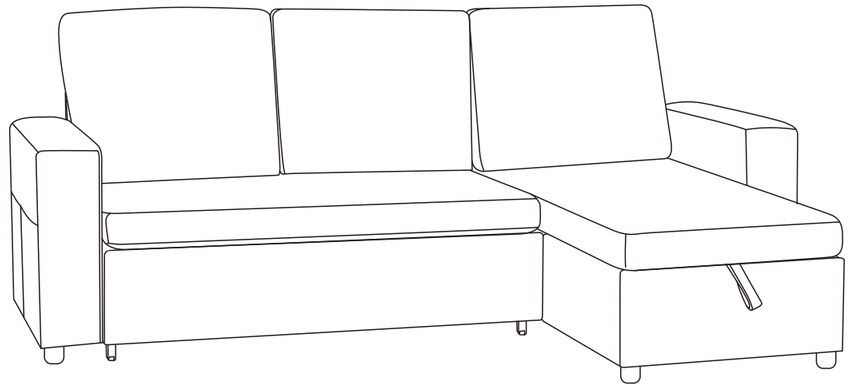

1. Avoid direct sunlight, preferably placed in a place that can avoid sunlight, or use translucent tulle curtains to block the sun.
2. Vacuum at least once a week, paying particular attention to removing dust accumulation between fabric structures.
3. Sofa cushions are turned over once a week to evenly distribute wear.
4. If stained, use a clean cloth dipped in water to wipe. In order to avoid leaving marks, it is best to wipe from the periphery of the stain. Velvet furniture should not be dipped in water and should use a dry cleaning agent.
5. All cloth covers and bushings should be dry-cleaned, not washed, not bleached.
6. If you find loose thread, do not tear it with your hand; it is best to cut the thread neatly with scissors.