ASSEMBLY INSTRUCTIONS

Item Number:

N604P495742

N604P495743

Bed

90*190cm

Our product will be delivered to you in 2 packages. The delivery times of these 2 packages may differ, please be patient and thank you for your understanding.

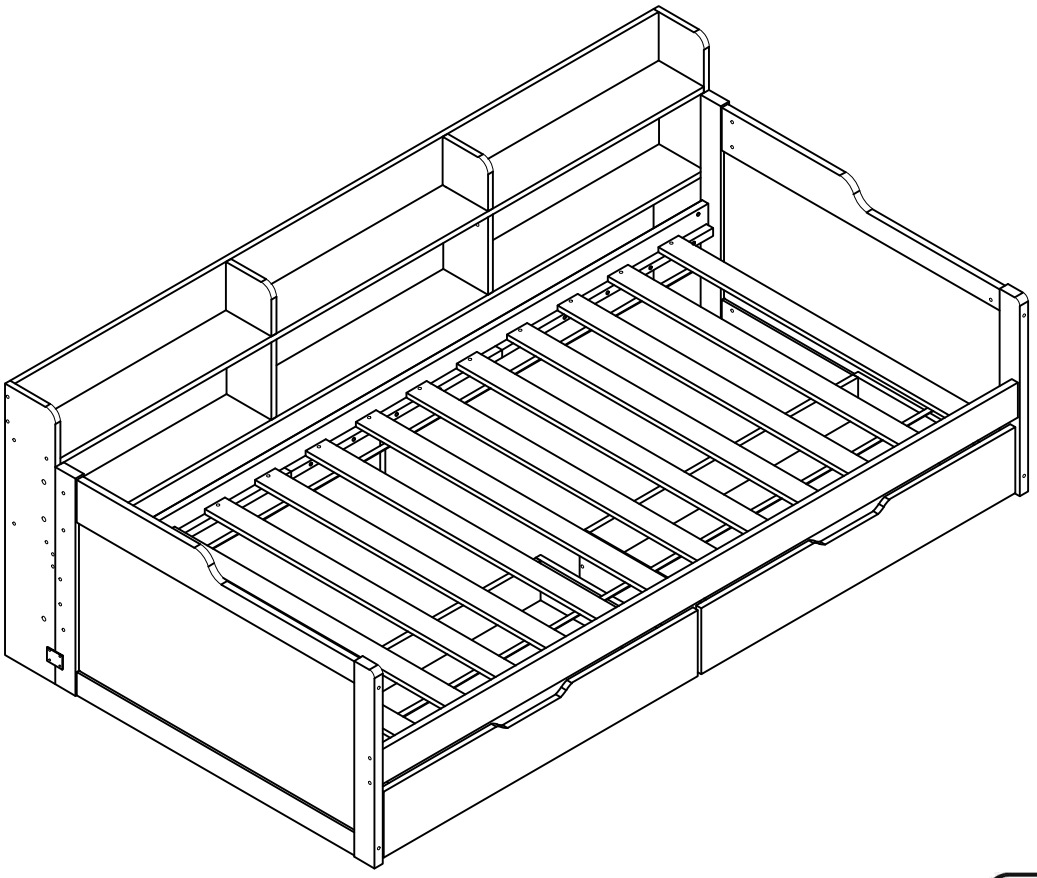

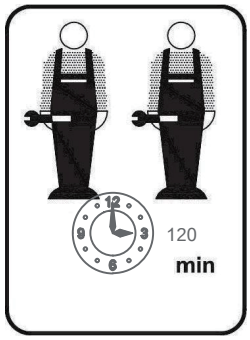

INSTRUCTIONS

IMPORTANT-READ CAREFULLY-RETAIN FOR FUTURE REFERENCE

a) **WARNING** -Children can become trapped between the bed and the wall, the adjoining pieces of furniture (e.g. cupboards) and the lke. To avoid risk of serious injury the distance between the safety barrier and the adjoining structure shall not exceed 7 5 mm or shall be more than 200 mm.

b) **WARNING**-Do not use the bed if any structural part is broken or missing; Replacement parts are between requested from the manufacturer or the store.

c) **WARNING**-Do not climb or wiggle on any non-designated structures.

d) it is imperative to always follow the installation instructions and manufacturer's use.

e) The recommended size of the mattress to be used with the bed is 190cmx90cm,

f) It is necessary to ventilate the room in order to maintain a low level moisture and prevent mold growth in the bed and its periphery.

g) Joining devices should always be tightened properly and regularly verified. Tighten if necessary.

English | **IMPORTANT ! KEEP FOR FUTURE REFERENCE : READ CAREFULLY**

- To be assembled by an adult. Assembly must be checked by an adult before use
- WARNING ! Keep all screws, small parts and plastic bags out of the reach of children
- Properly identify all parts before assembling
- Never use your item if any of its parts are broken or missing
- Should any problems arise, please contact our After Sales Service
- Manufacturer's instructions shall be followed at all times
- Care: Clean with a soft, dry cloth. In case of larger stains, carefully rub with a slightly damp, non-abrasive sponge
- Avoid the risk of fire by not placing furniture near sources of ignition or hot items
- Do not jump on the bed







ASSEMBLY INSTRUCTIONS

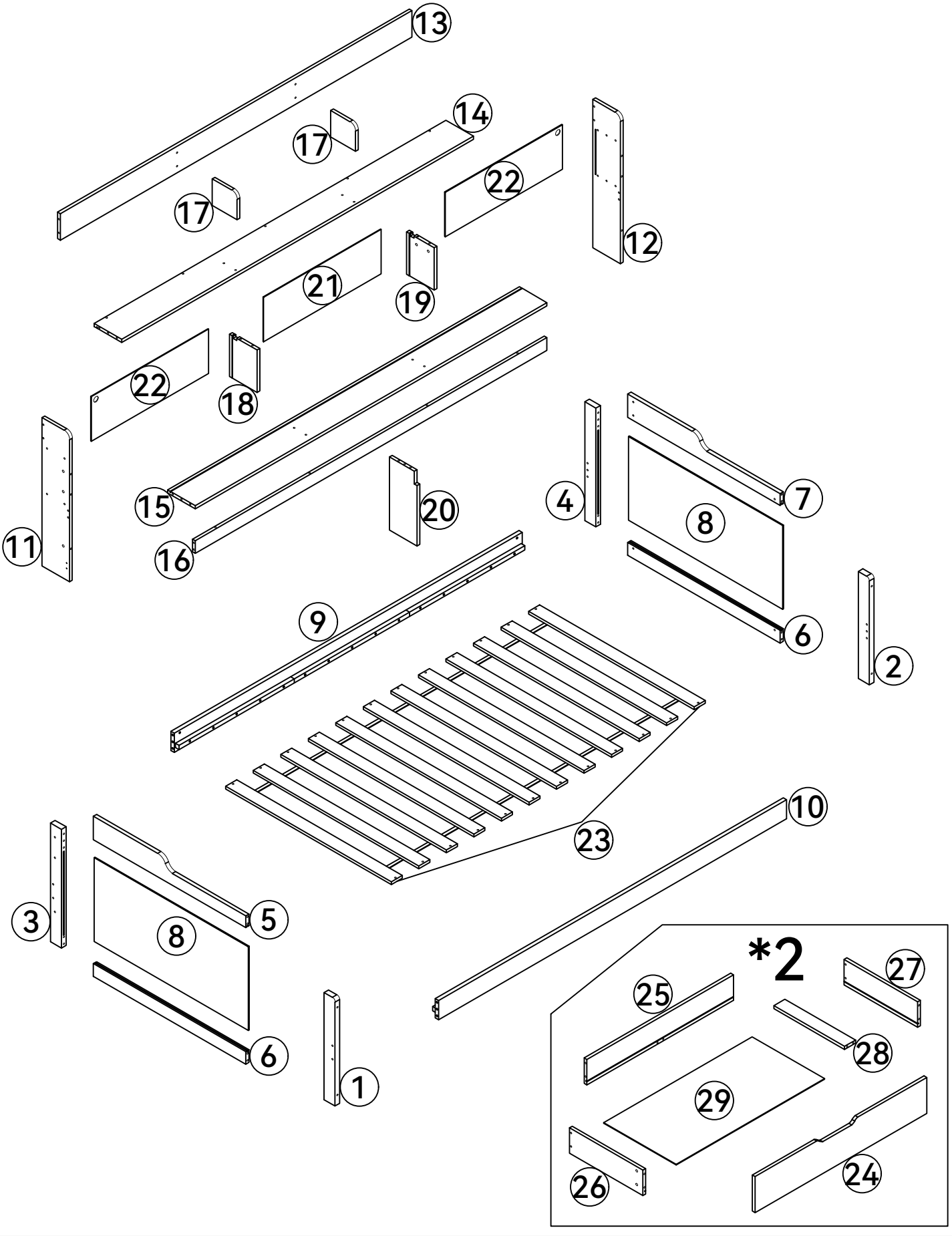

ASSEMBLY INSTRUCTIONS

N604P495742

1		1PC	13	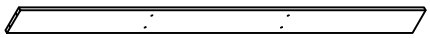	1PC
2		1PC	14		1PC
3		1PC	15		1PC
4		1PC	16	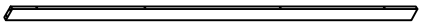	1PC
6		1PC	24	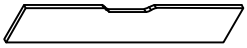	2PCS
9		1PC	26		2PCS
10	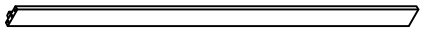	1PC	27		2PCS

N604P495743

5		1PC	20	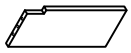	1PC
7		1PC	21	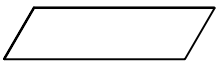	1PC
8	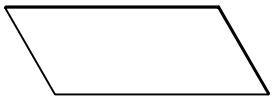	2PCS	22		2PCS
11	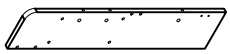	1PC	23	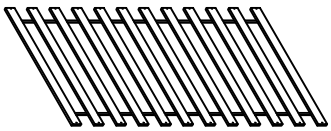	1PC
12	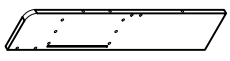	1PC	25		2PCS
17		2PCS	28	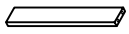	2PCS
18		1PC	29	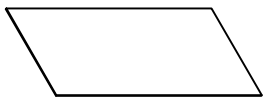	2PCS
19		1PC			

ASSEMBLY INSTRUCTIONS

N604P495743

A	6x100		10PCS	K			1PC
B	6x65		8PCS	O			8PCS
C			24PCS	P		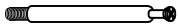	6PCS
D	Ø8x30		17PCS	Q	3x25		24PCS
G	5x40	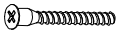	40PCS	S	M4		1PC
H		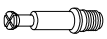	27PCS	U			1PC
I			33PCS	V	V1 	V2  (3x14)	3PCS
J	3.5x14		38PCS	X		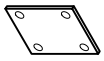	6PCS

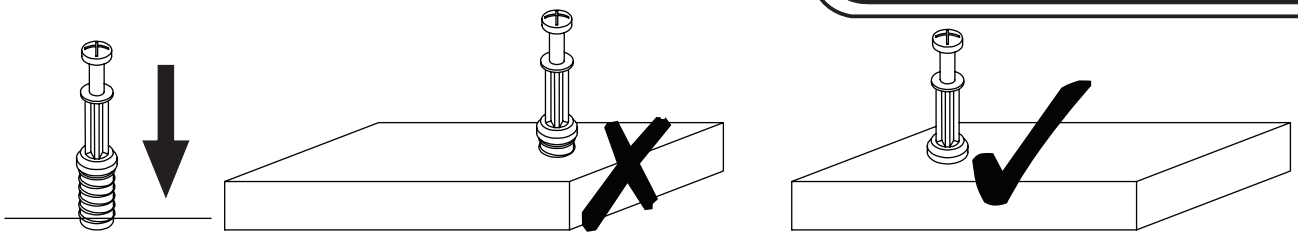

EN_QUICKFIT: Tighten quickfit until shoulder is flush with panel.Do not overtighten or undertighten.
FR_RACCORD RAPIDE:Faites serrer le raccord rapide jusqu'à ce que l'épaulement soit parfaitement encastré dans le panneau. Il ne faut ni trop serrer ni insuffisamment serrer.
ES_QUICKFIT:Apriete quickfit hasta que el hombre se descargue con el panel. NO lo sobreapriete ni lo apriete poco.
DE_QUICKFIT:Ziehen Sie den Quickfit fest, bis die Schulter mit der Platte bündig ist. Bitte nicht zu fest oder zu schwach anziehen.
IT_MONTAGGIO RAPIDO:Stringere il montaggio rapido fino a quando la spalla è a filo con il pannello, non stringere troppo o troppo poco.

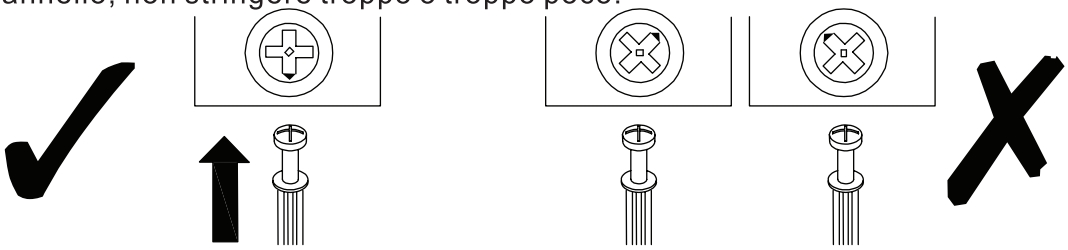

EN_CAM LOCK: When fitting cam lock, ensure starting position is correct before you insert connecting quickfit.
FR_SERRURE BATTEUSE:Avant d'insérer la serrure batteuse, veillez à la bonne orientation avant d'insérer le raccord rapide.
ES_CIERRE DE LA CÁMARA:Cuando instale el cierre de la cámara, asegúrese de que la posición de inicio es correcta antes de que inserte el quickfit conector.
DE_CAM-LOCK:Achten Sie bei der Montage des Cam-Locks auf die richtige Ausgangsposition, bevor Sie den Quickfit einsetzen.
IT_BLOCCAGGIO A CAMMA:Quando si monta il bloccaggio a camma, assicurarsi che la posizione iniziale sia corretta prima di inserire il montaggio rapido di collegamento.

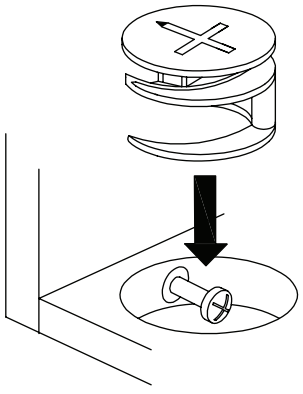

EN_ Quickfit head should be in the centre of the cam lock when the two panels are joined.
Cam lock should be inserted before quickfit.
FR_ Lorsque les deux panneaux sont assemblés, la tête du raccord rapide doit reposer au centre de la serrure batteuse.
Il faut insérer la serrure batteuse avant le raccord rapide.
ES_ El cabezal del quickfit debe estar en el centro del cierre de la cámara cuando se unan los dos paneles.
Se debe insertar el cierre de la cámara antes que el quickfit.
DE_ Der Quickfit-Kopf sollte sich in der Mitte des Cam-Locks befinden, wenn die beiden Platten zusammengefügt sind.
Der Cam-Lock sollte vor dem Quickfit eingesetzt werden.
IT_ La testa del montaggio rapido deve trovarsi al centro del bloccaggio a camma quando i due pannelli sono uniti.
Il Bloccaggio a Camma deve essere inserito prima del montaggio rapido.

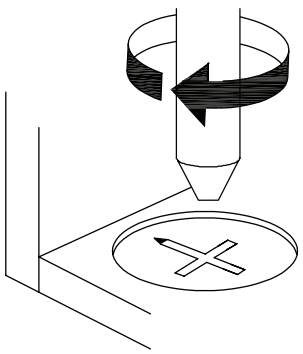

EN_ Turn cam lock clockwise to tighten.
FR_ Faites tourner la serrure batteuse dans le sens des aiguilles d'une montre pour la resserrer.
ES_ Gire el cierre de la cámara en sentido horario para apretarlo.
DE_ Drehen Sie den Cam-Lock im Uhrzeigersinn, um ihn festzuziehen.
IT_ Ruotare il bloccaggio a camma in senso orario per stringere.

ASSEMBLY INSTRUCTIONS

1

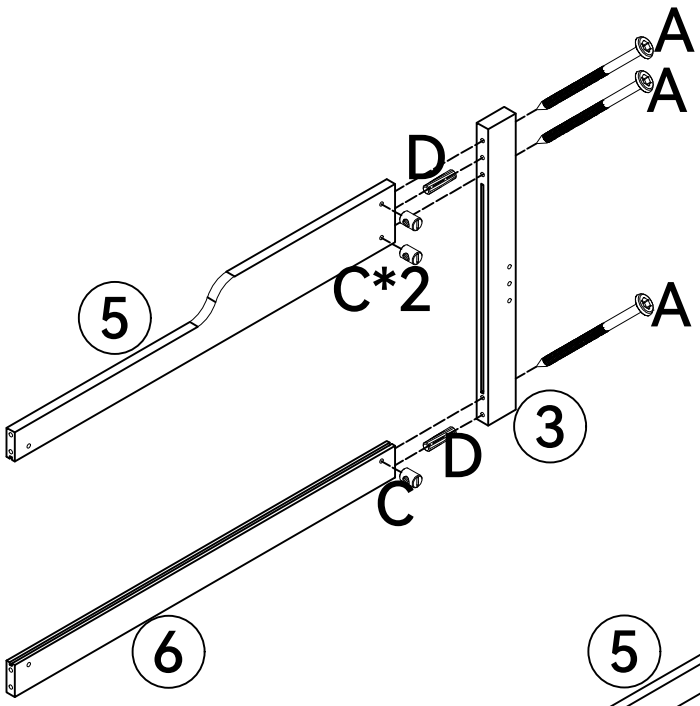

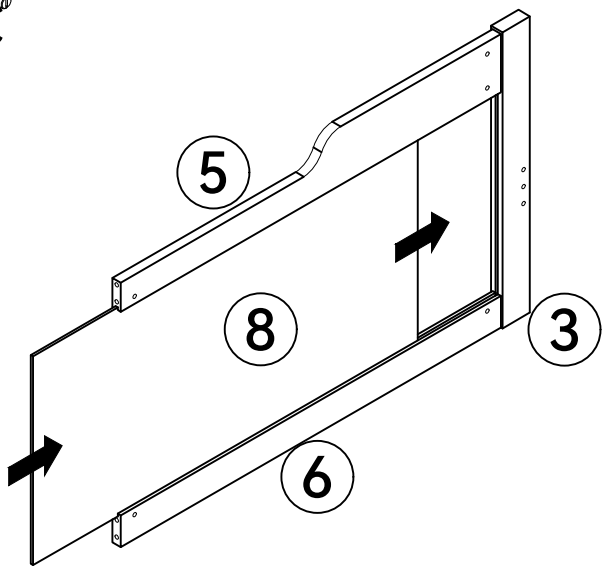

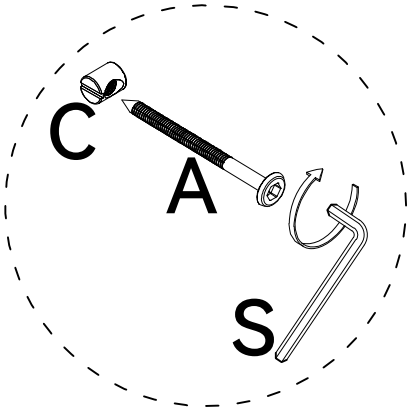

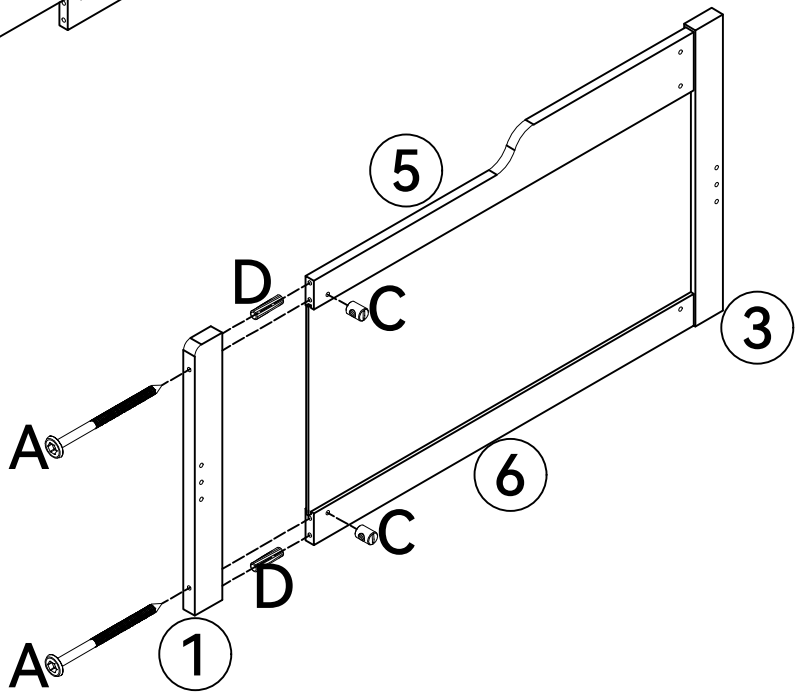

~~B~~	~~6x65~~		
A	6x100		5PCS
C			5PCS
D	ø8x30		4PCS
S	M4		1PC

ASSEMBLY INSTRUCTIONS

2

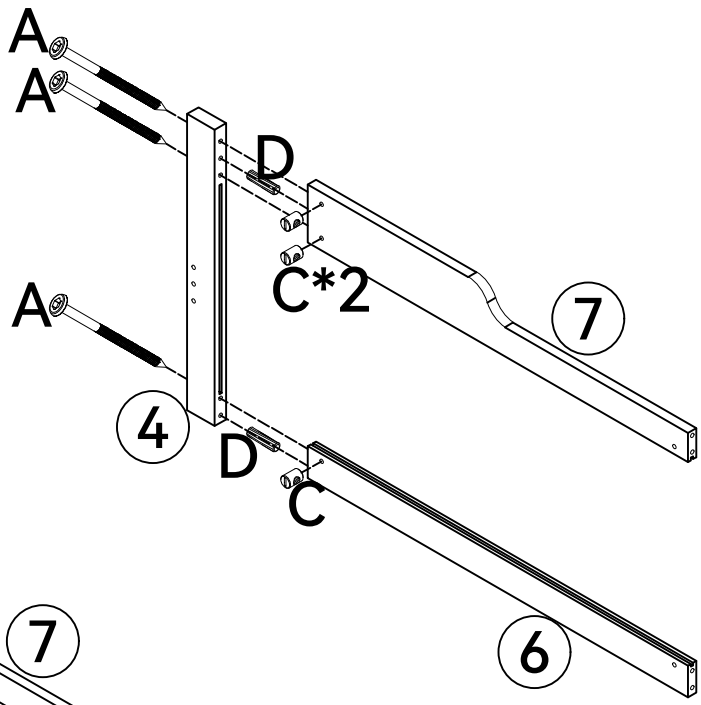

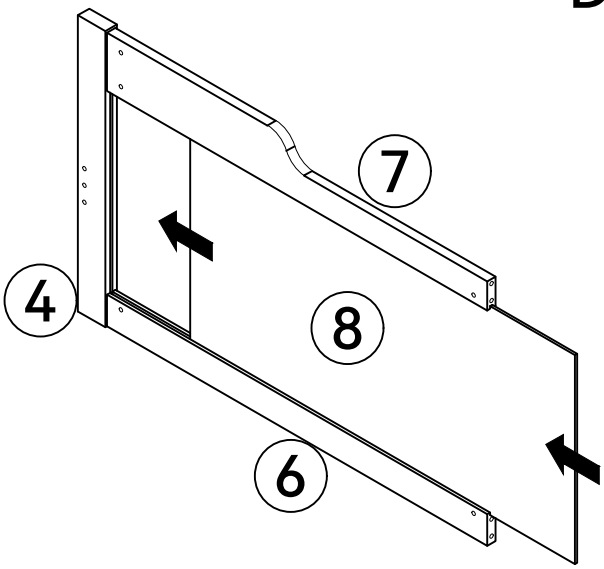

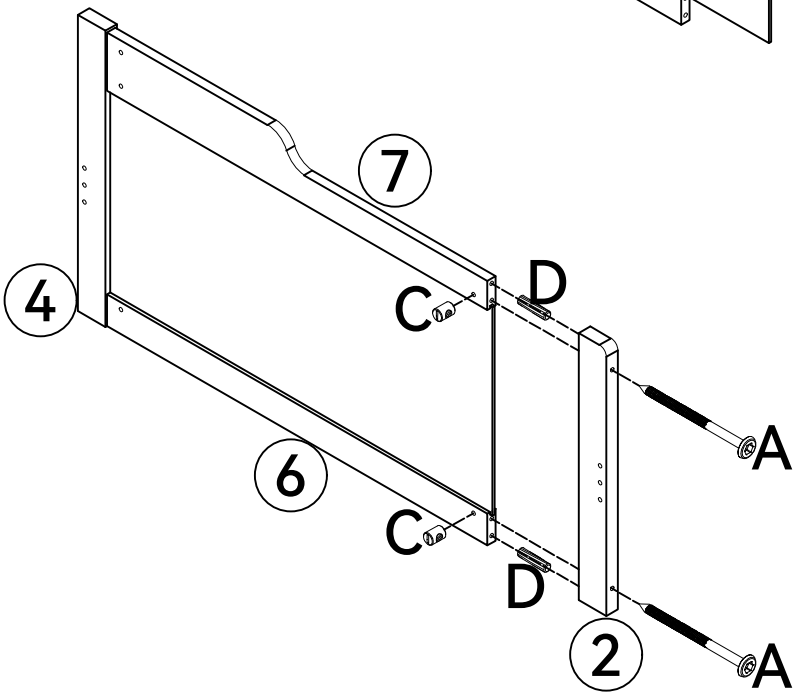

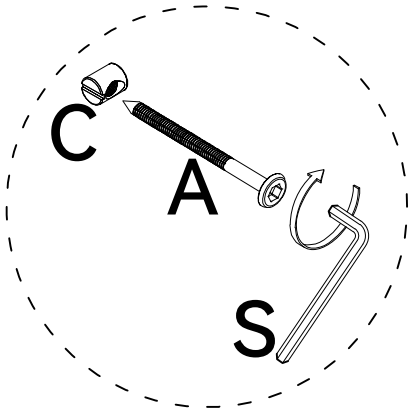

B	6x65	
A	6x100	5PCS
C		5PCS
D	ø8x30	4PCS
S	M4	1PC

ASSEMBLY INSTRUCTIONS

3

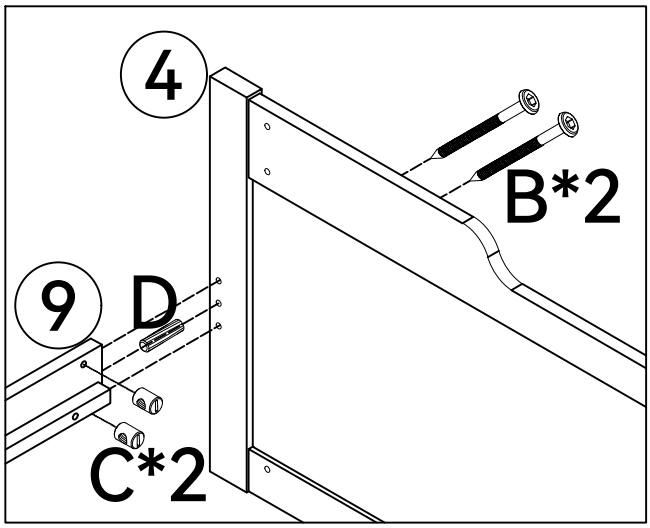

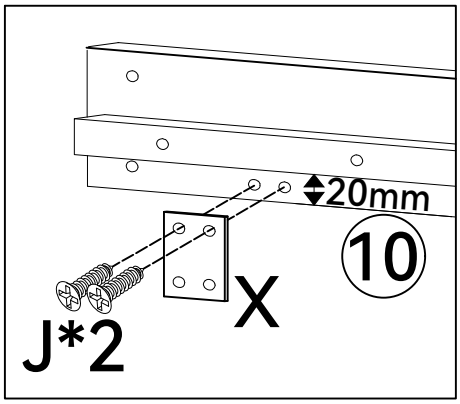

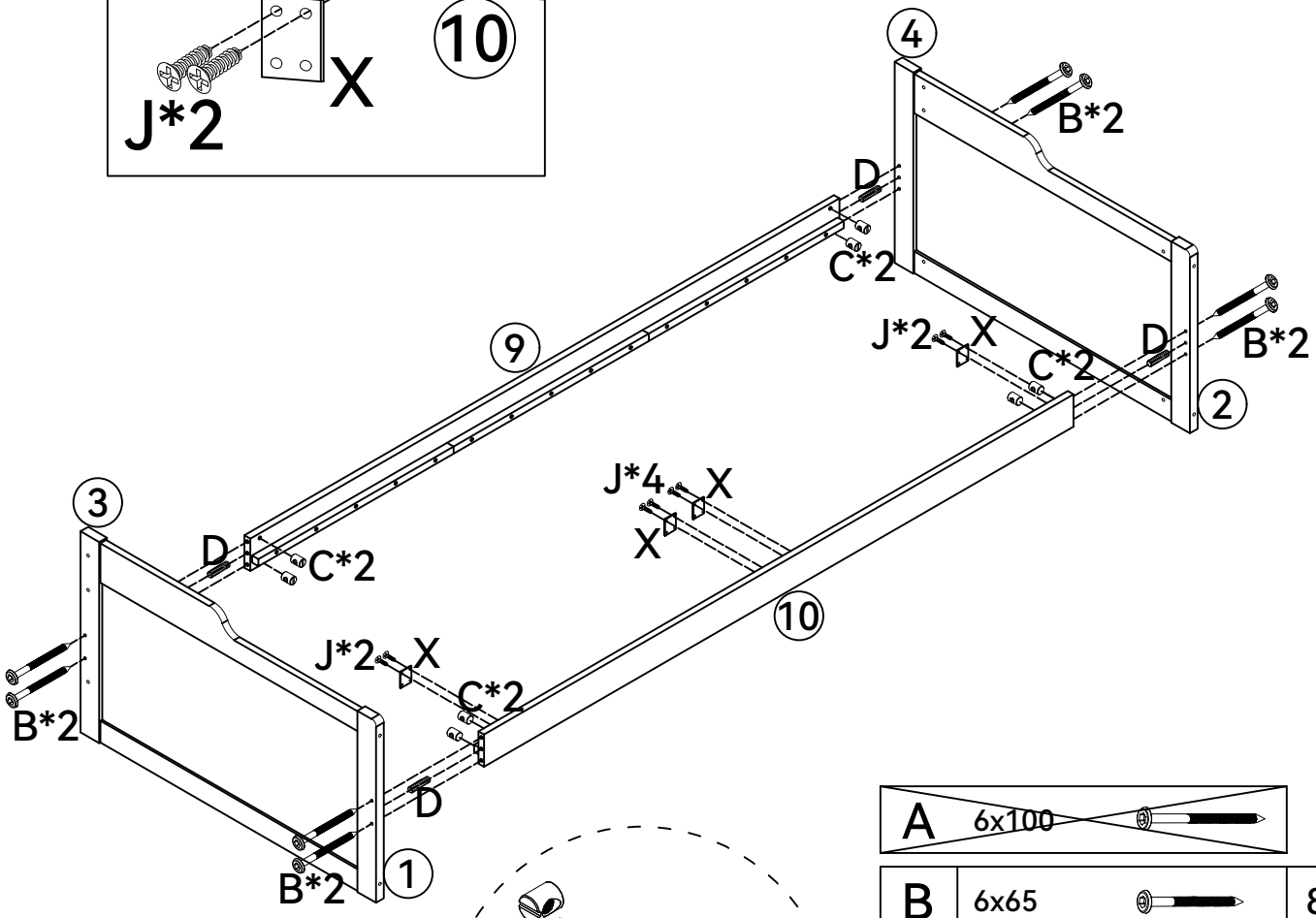

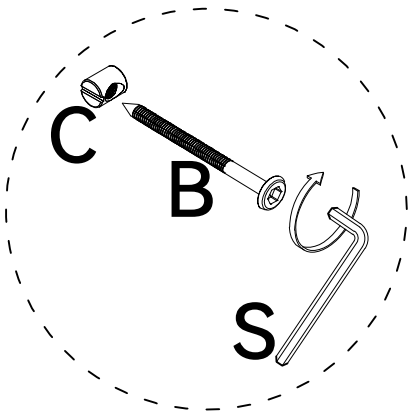

A	~~6x100~~	
B	6x65	8PCS
C		8PCS
D	ø8x30	4PCS
J	3.5x14	8PCS
X		4PCS
S	M4	1PC

ASSEMBLY INSTRUCTIONS

4

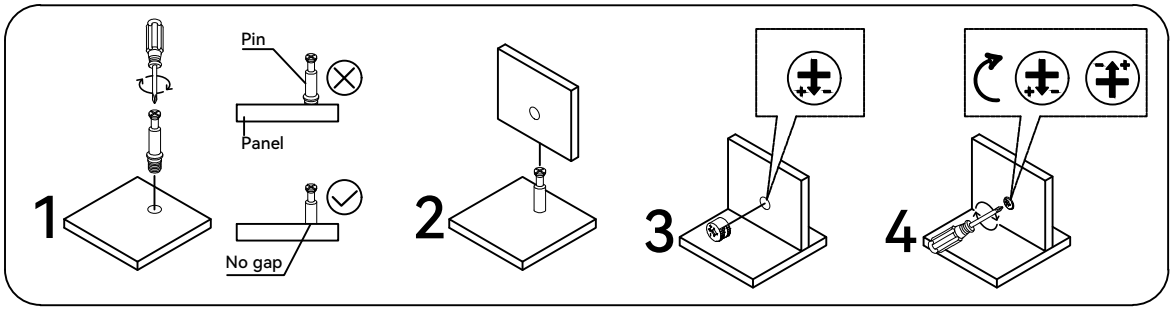

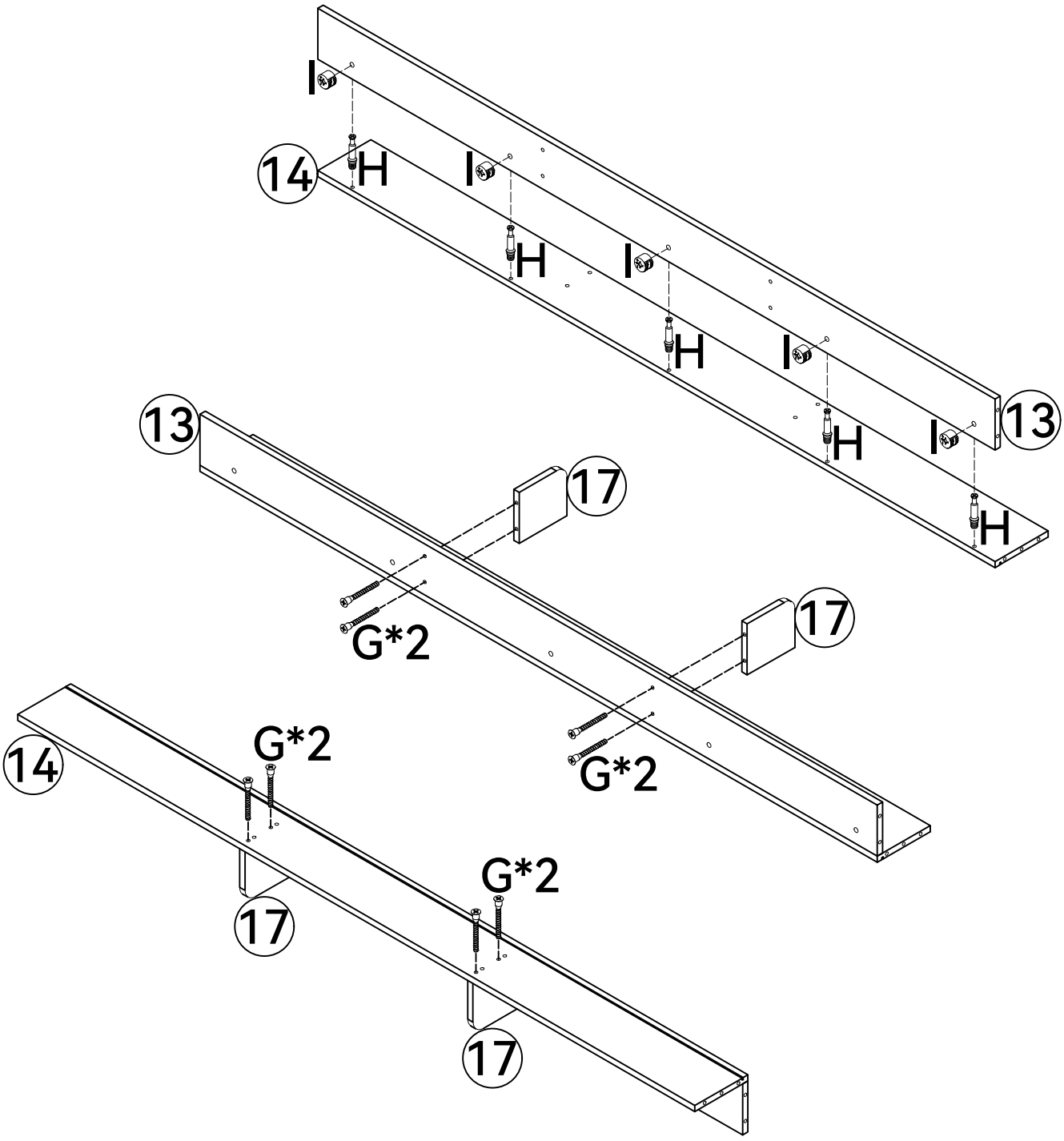

G	5x40	8PCS	H		5PCS	I		5PCS

ASSEMBLY INSTRUCTIONS

5

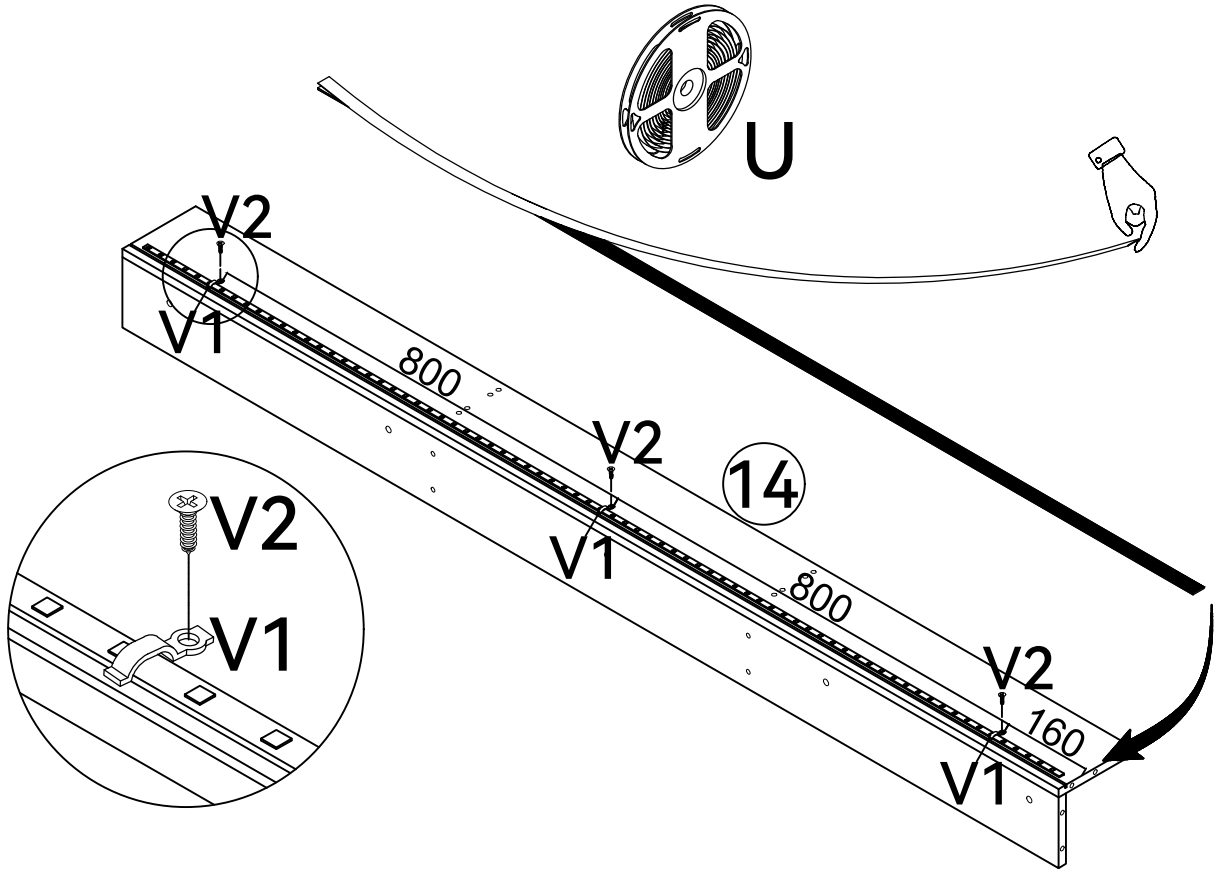

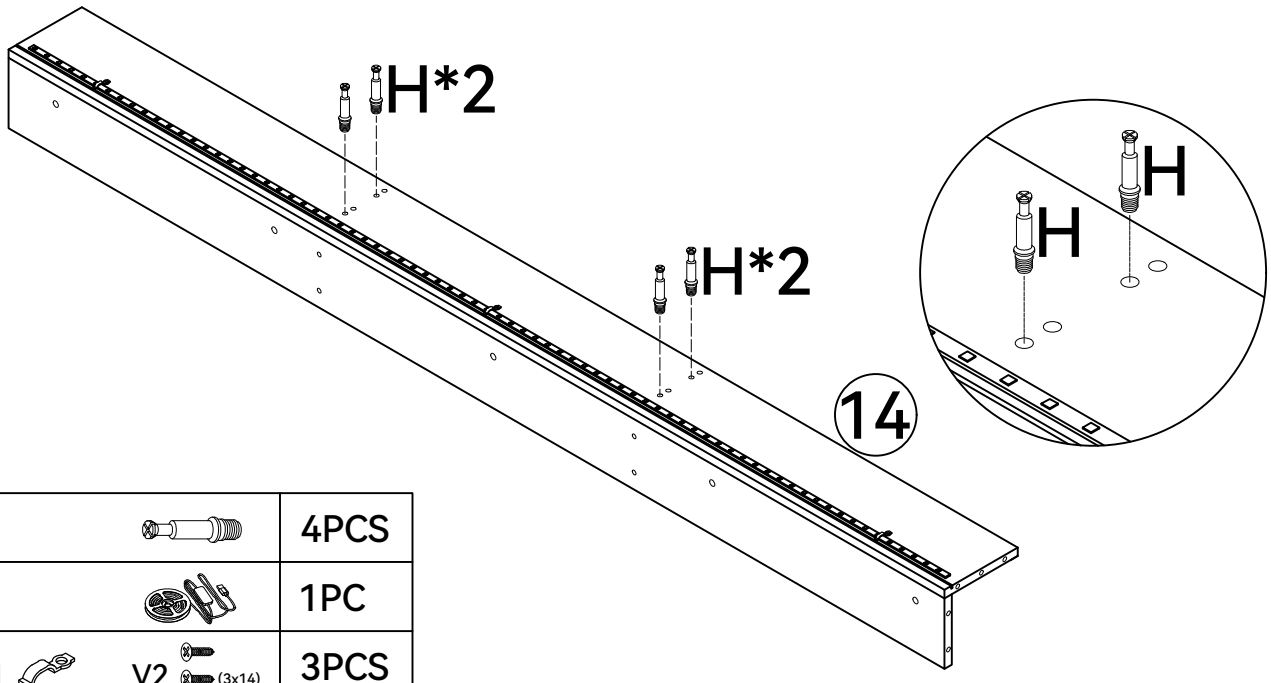

H		4PCS
U		1PC
V	V1 V2 (3x14)	3PCS

ASSEMBLY INSTRUCTIONS

6

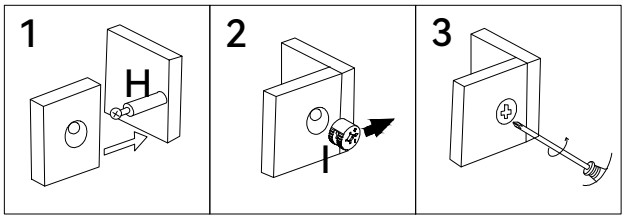

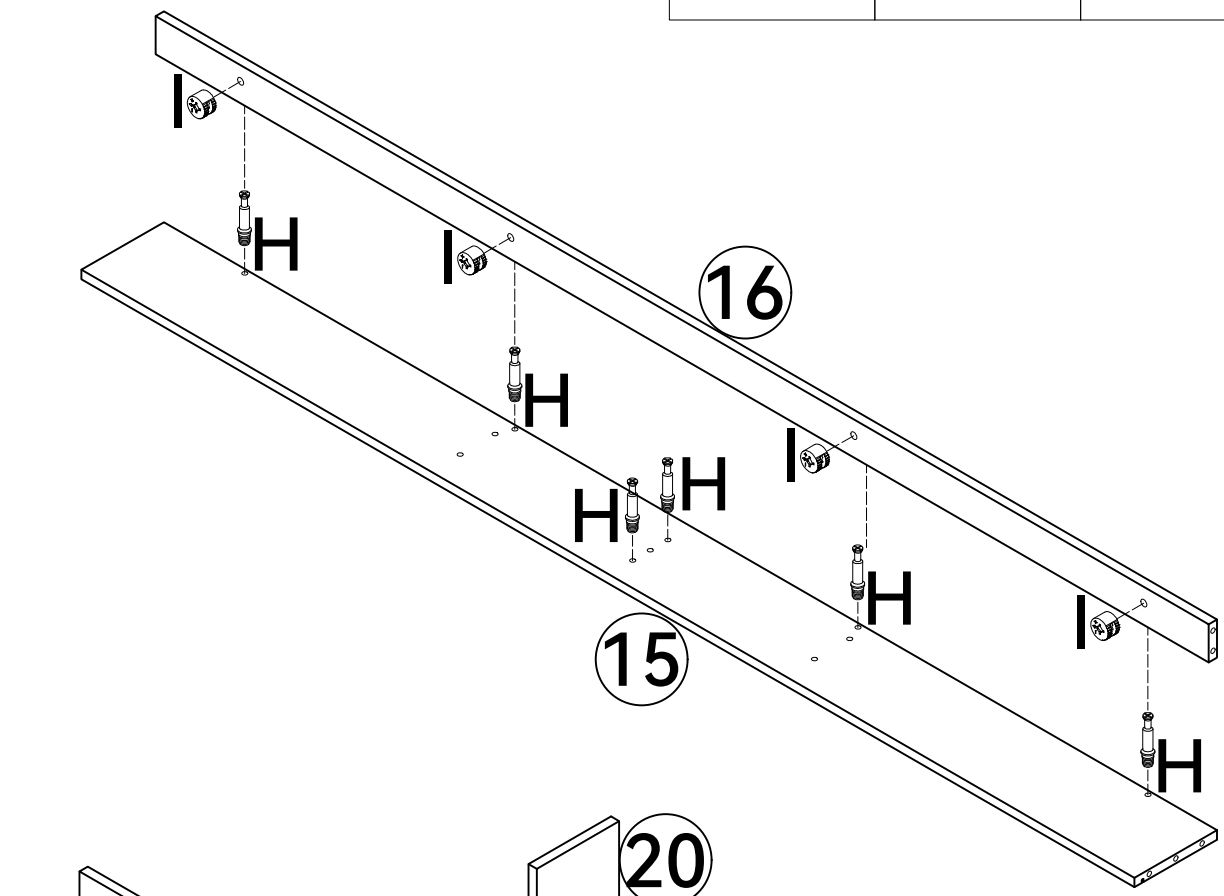

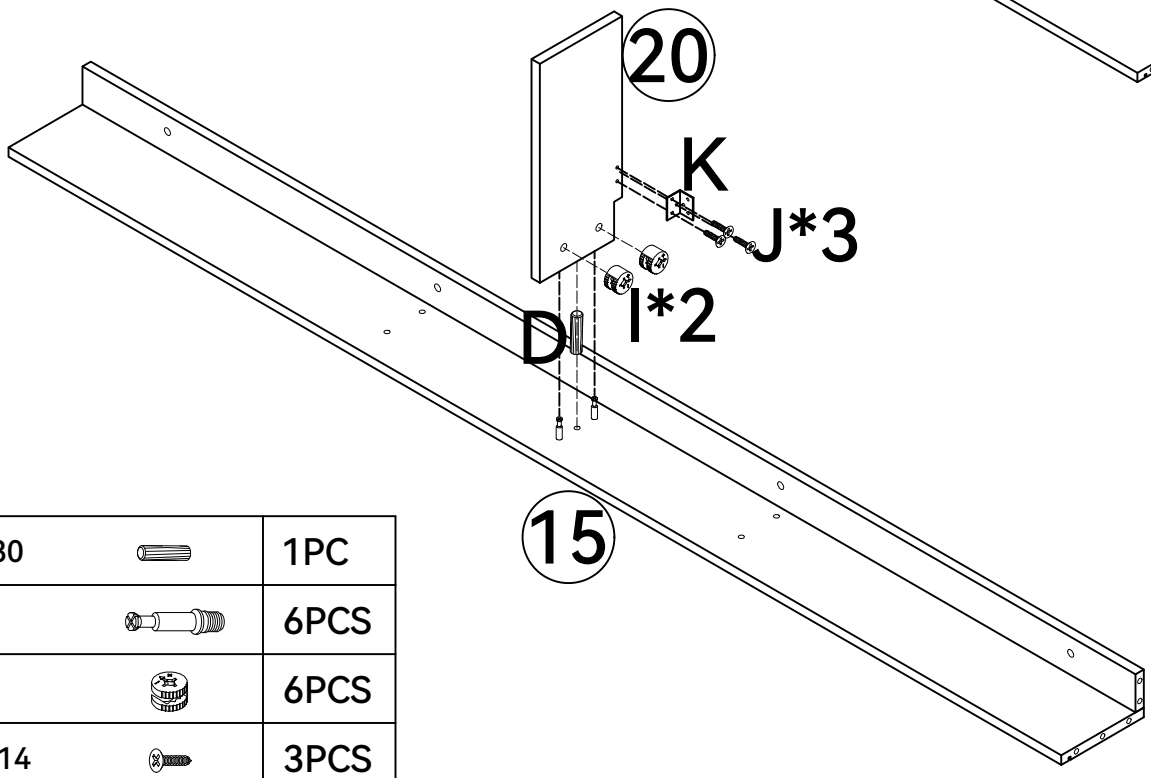

D	ø8x30	1PC
H		6PCS
I		6PCS
J	3.5x14	3PCS
K		1PC

ASSEMBLY INSTRUCTIONS

7

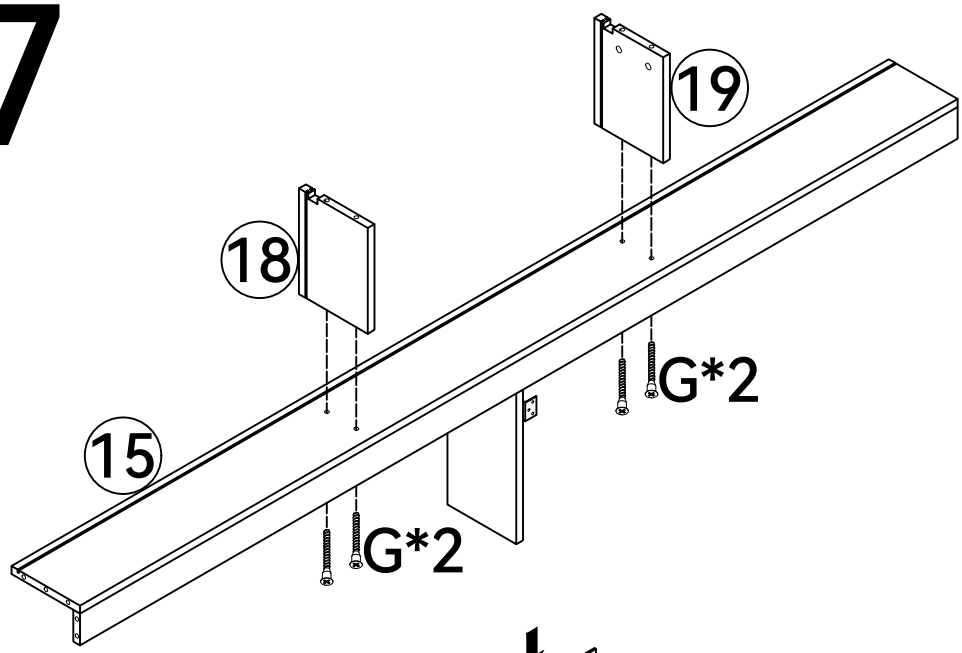

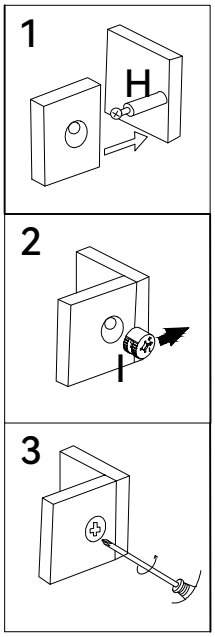

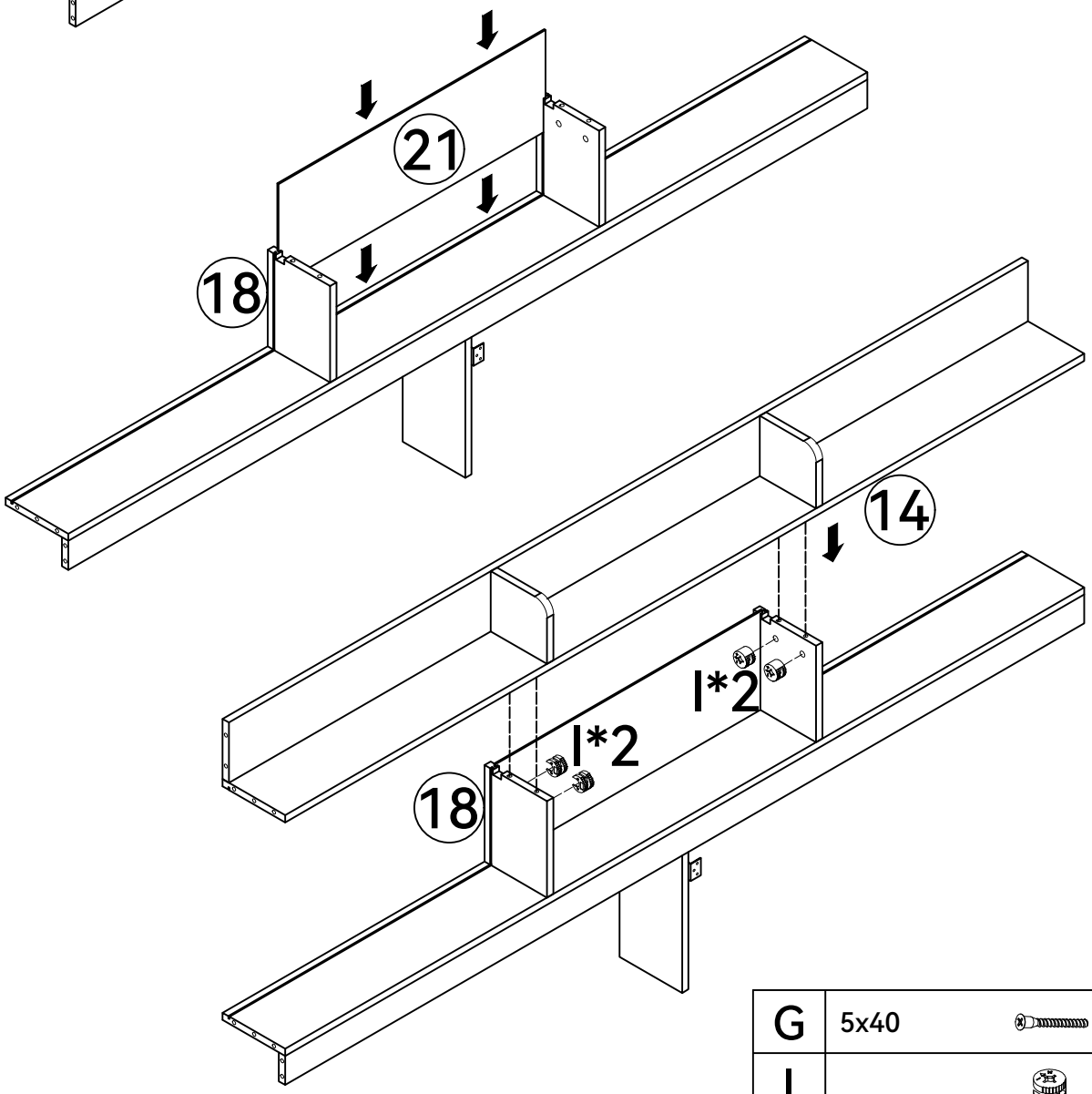

G	5x40	4PCS
I		4PCS

ASSEMBLY INSTRUCTIONS

8

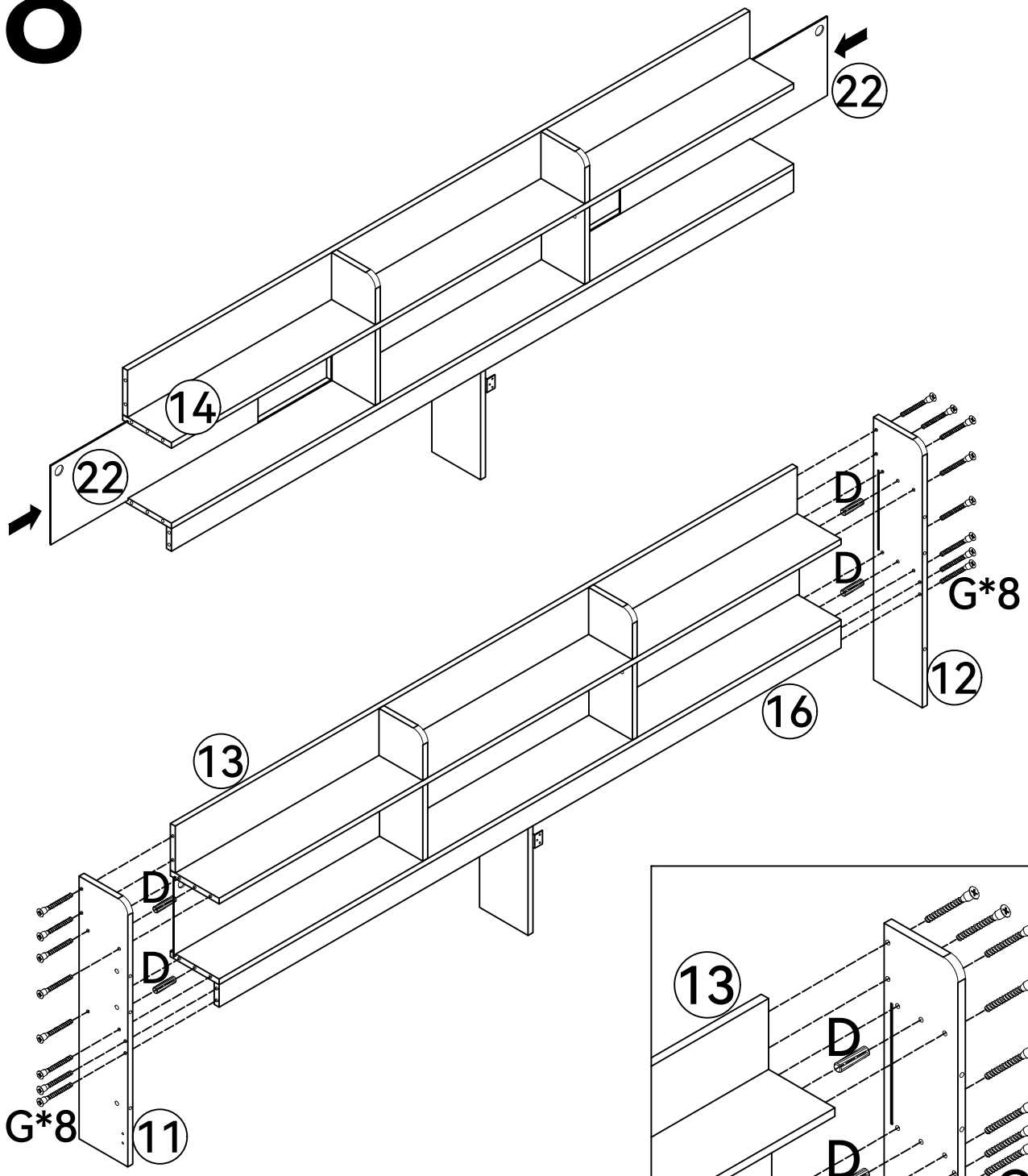

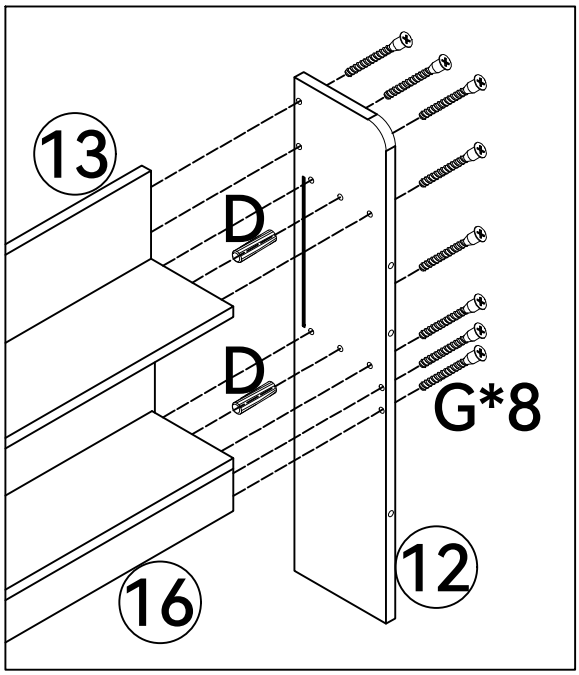

D	ø8x30		4PCS
G	5x40		16PCS

ASSEMBLY INSTRUCTIONS

9

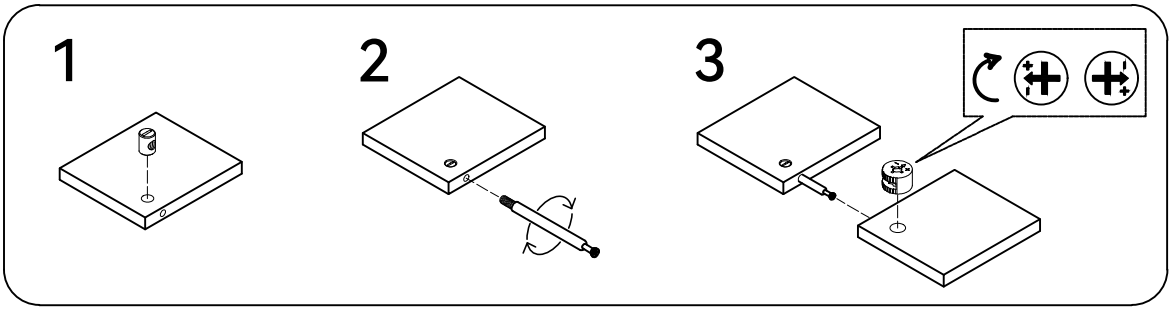

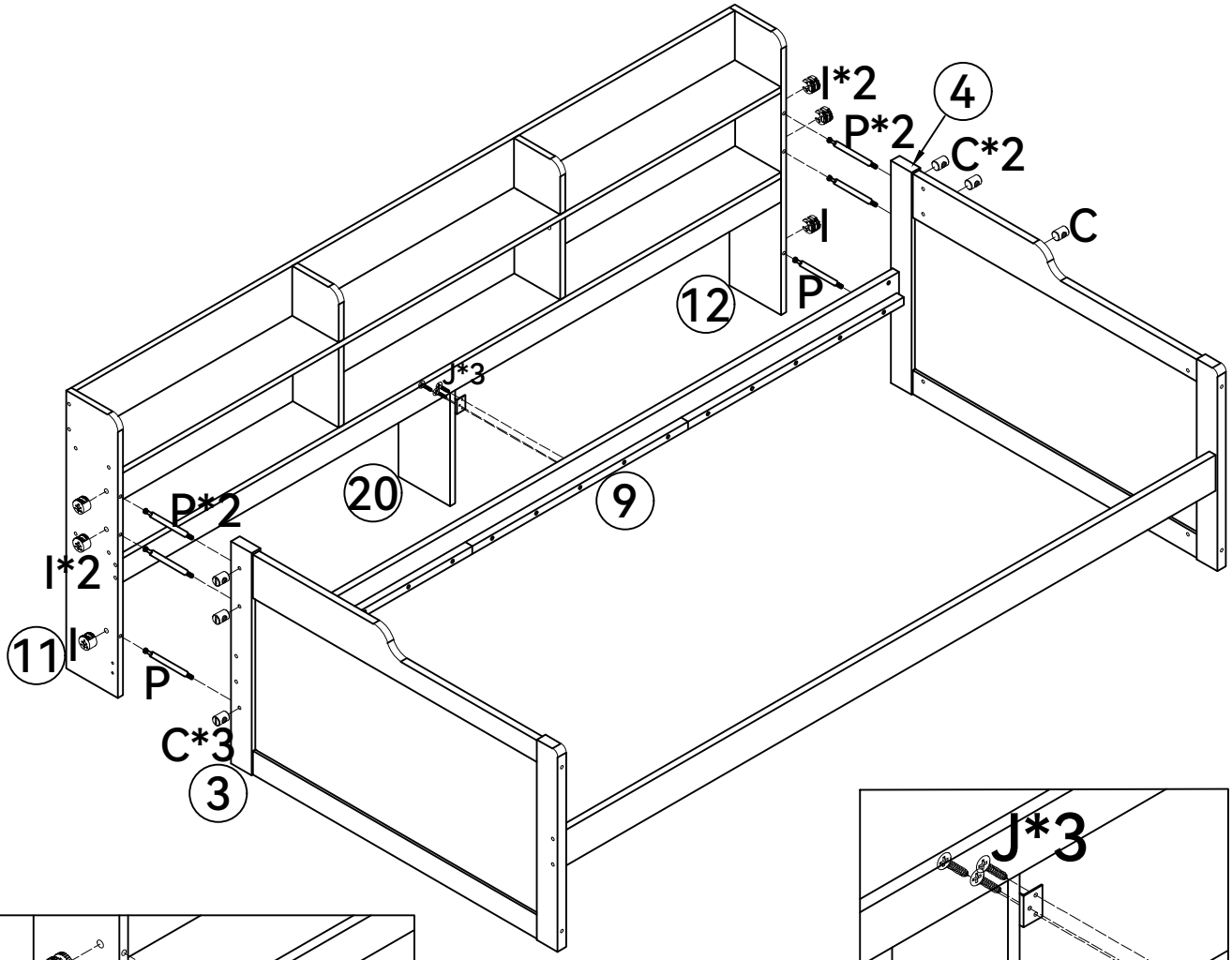

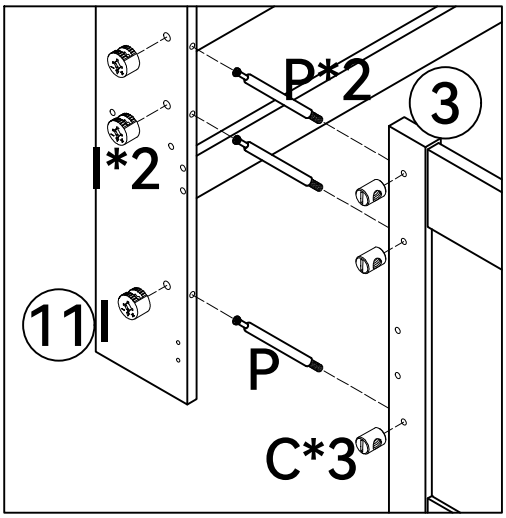

C		6PCS
I		6PCS
J	3.5x14	3PCS
P		6PCS

ASSEMBLY INSTRUCTIONS

10

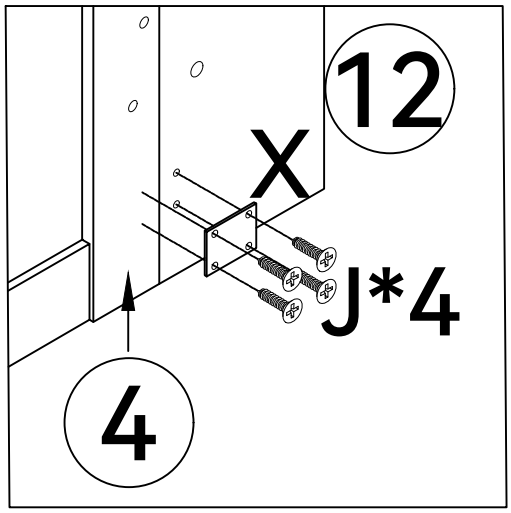

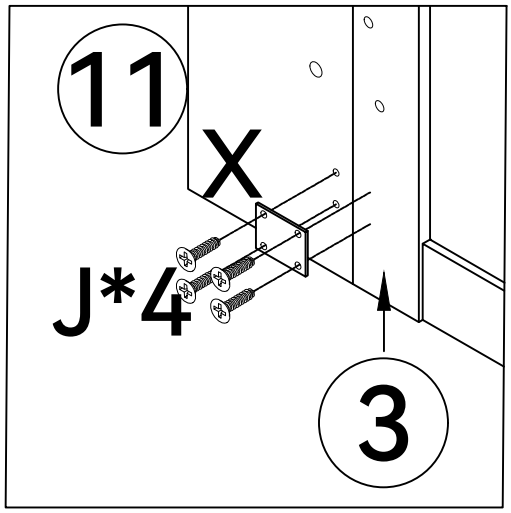

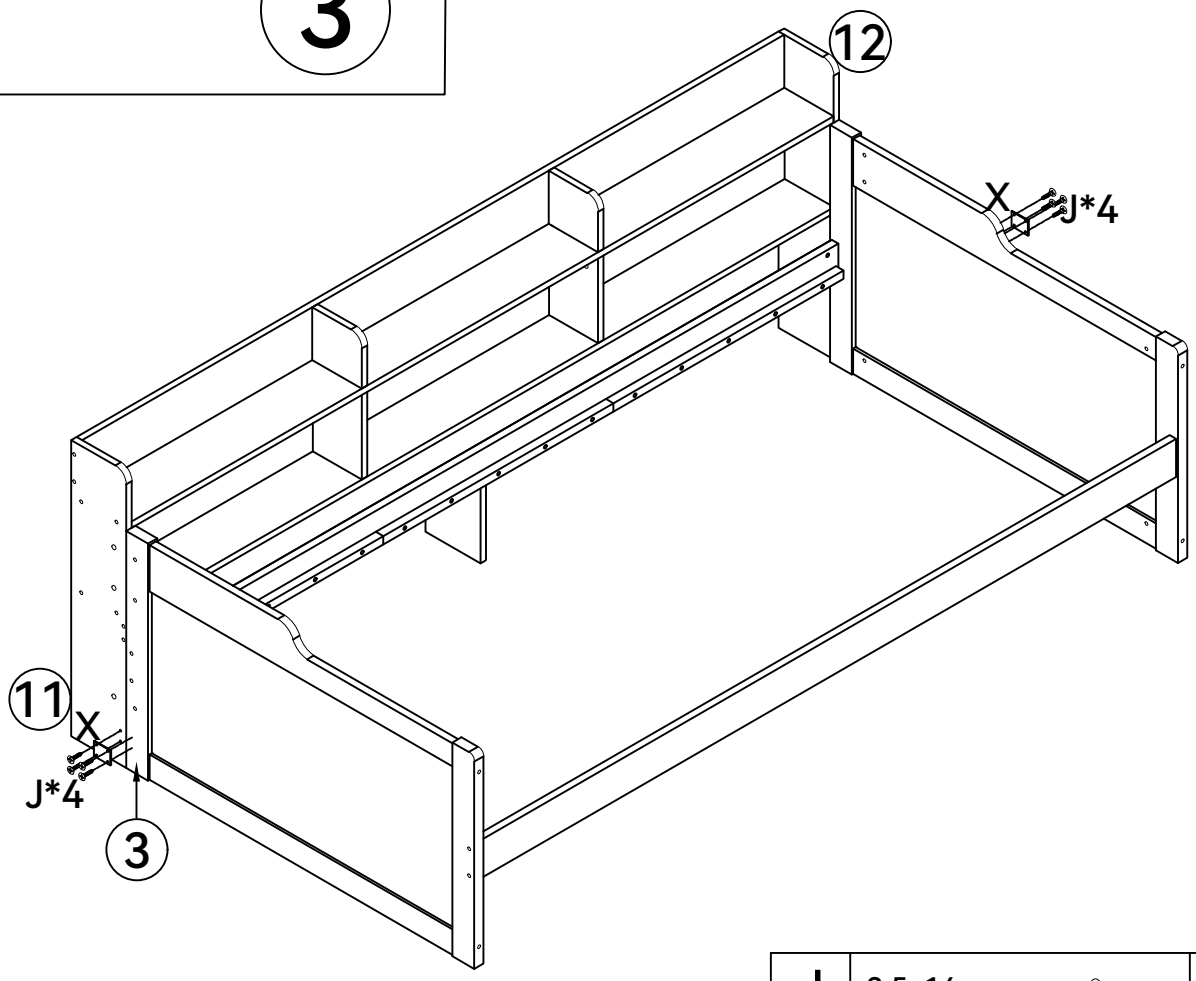

J	3.5x14	8PCS
X		2PCS

ASSEMBLY INSTRUCTIONS

11

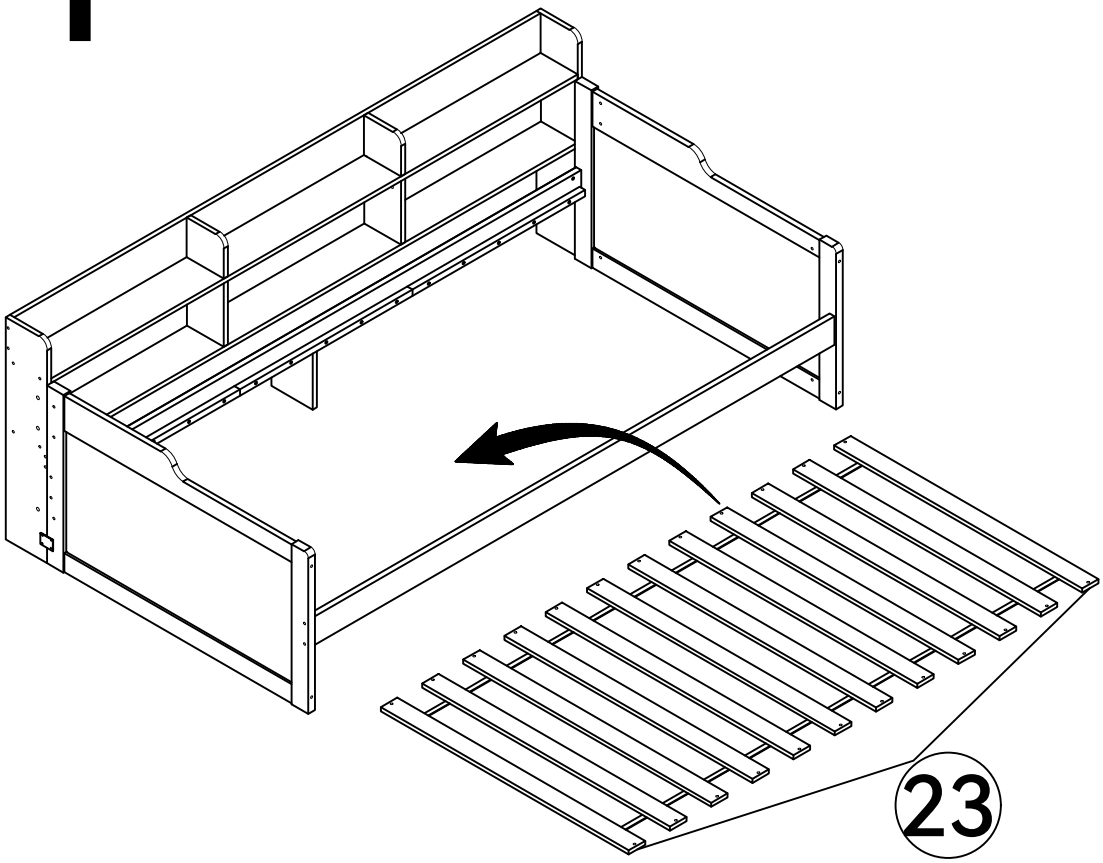

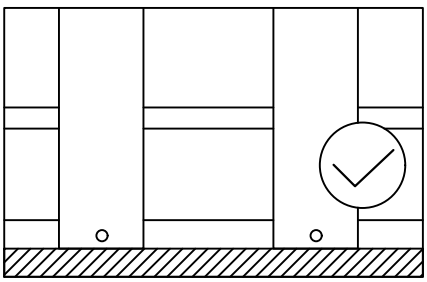

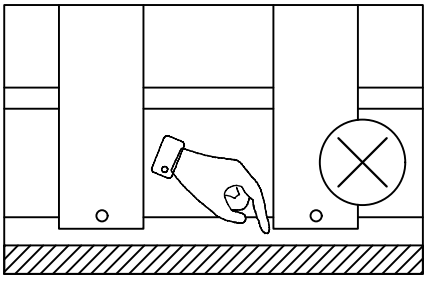

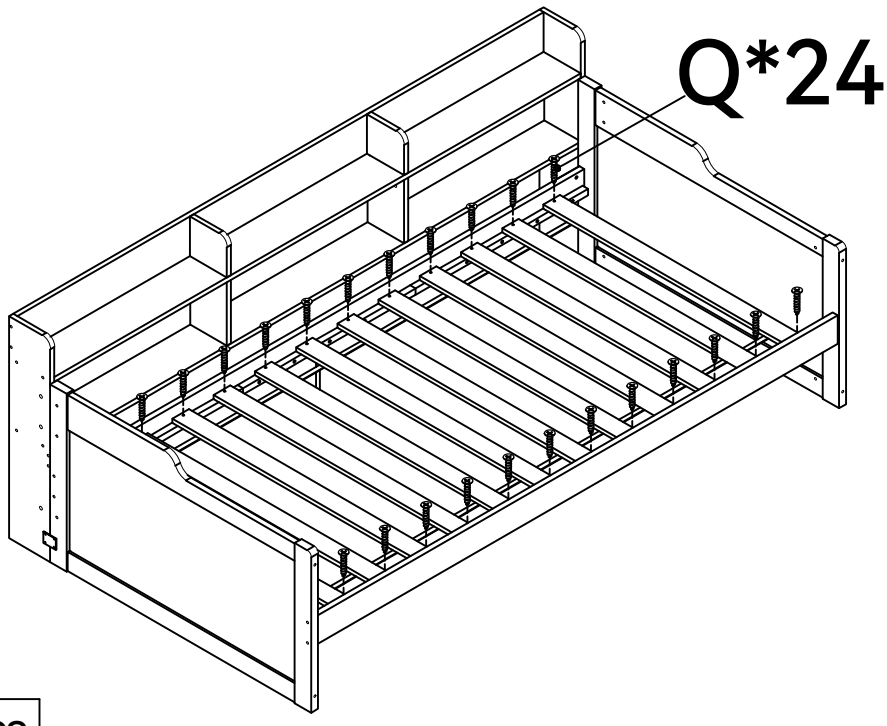

Q	3x25		24PCS

ASSEMBLY INSTRUCTIONS

12

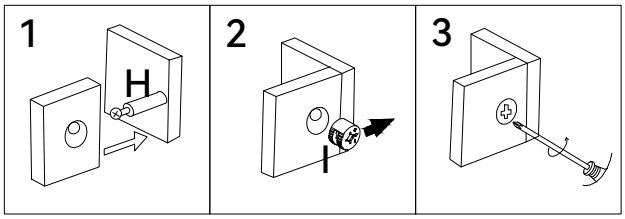

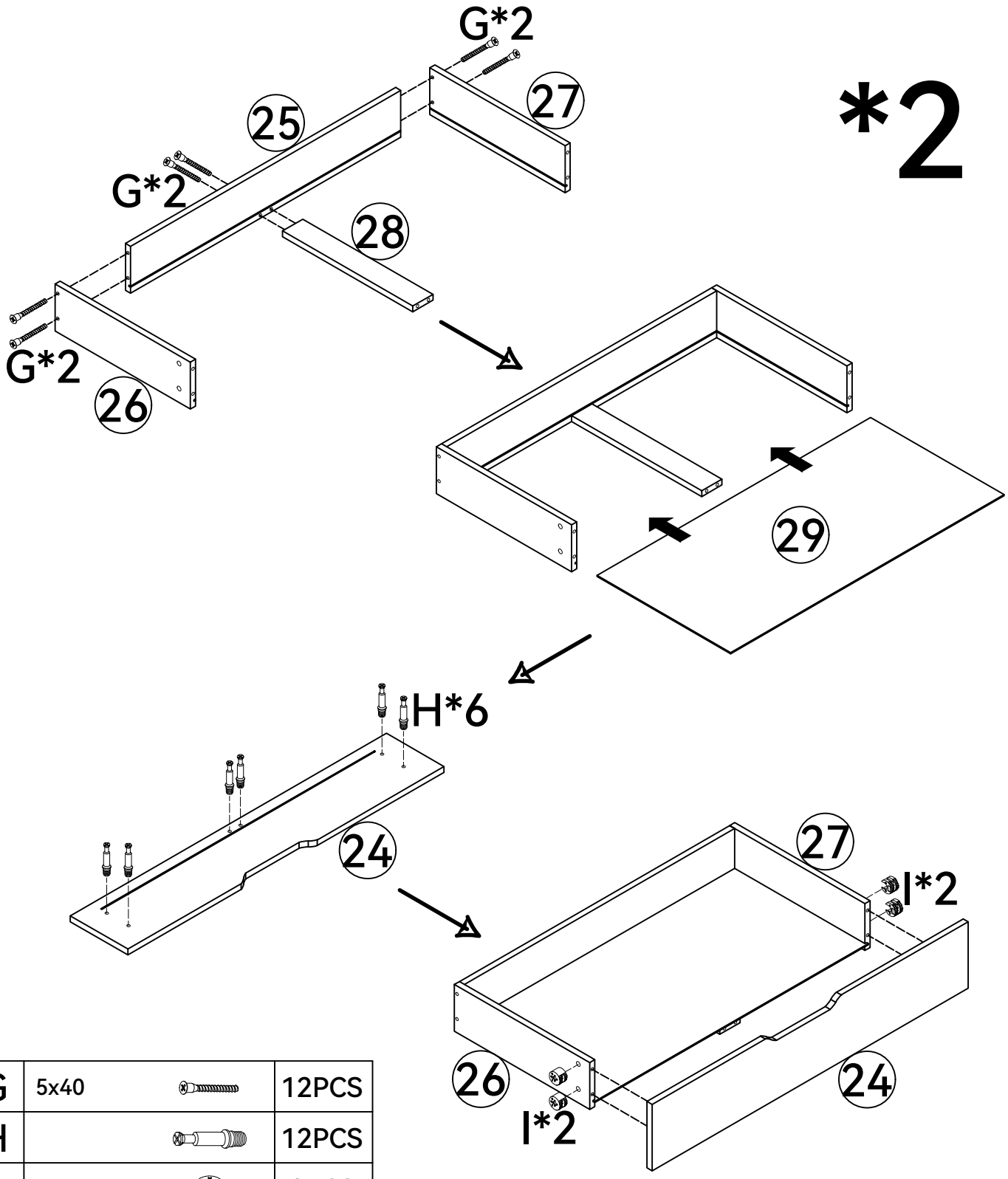

*2

G	5x40	12PCS
H		12PCS
I		8PCS

ASSEMBLY INSTRUCTIONS

13

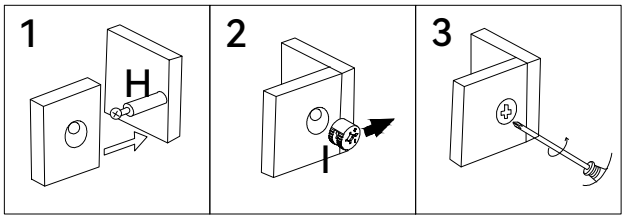

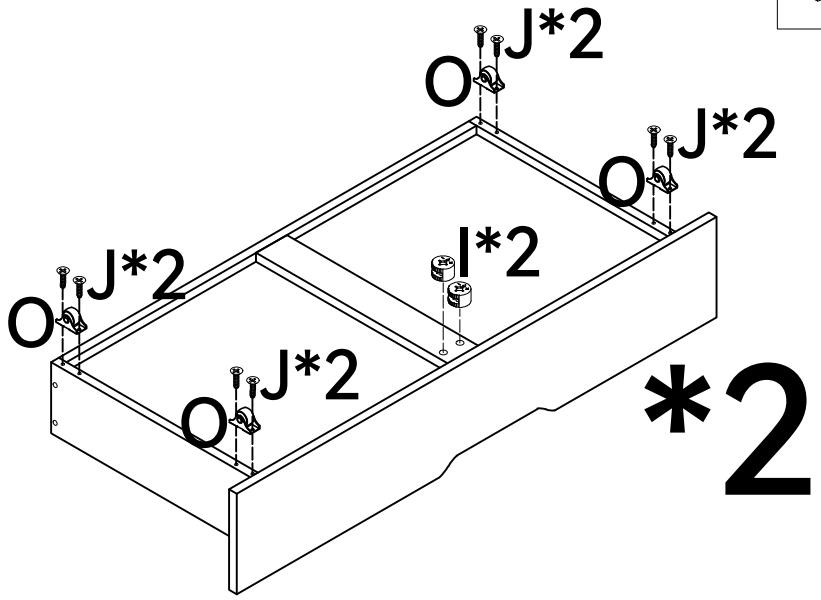

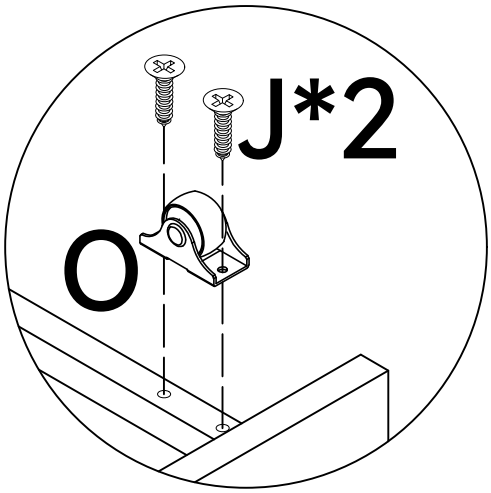

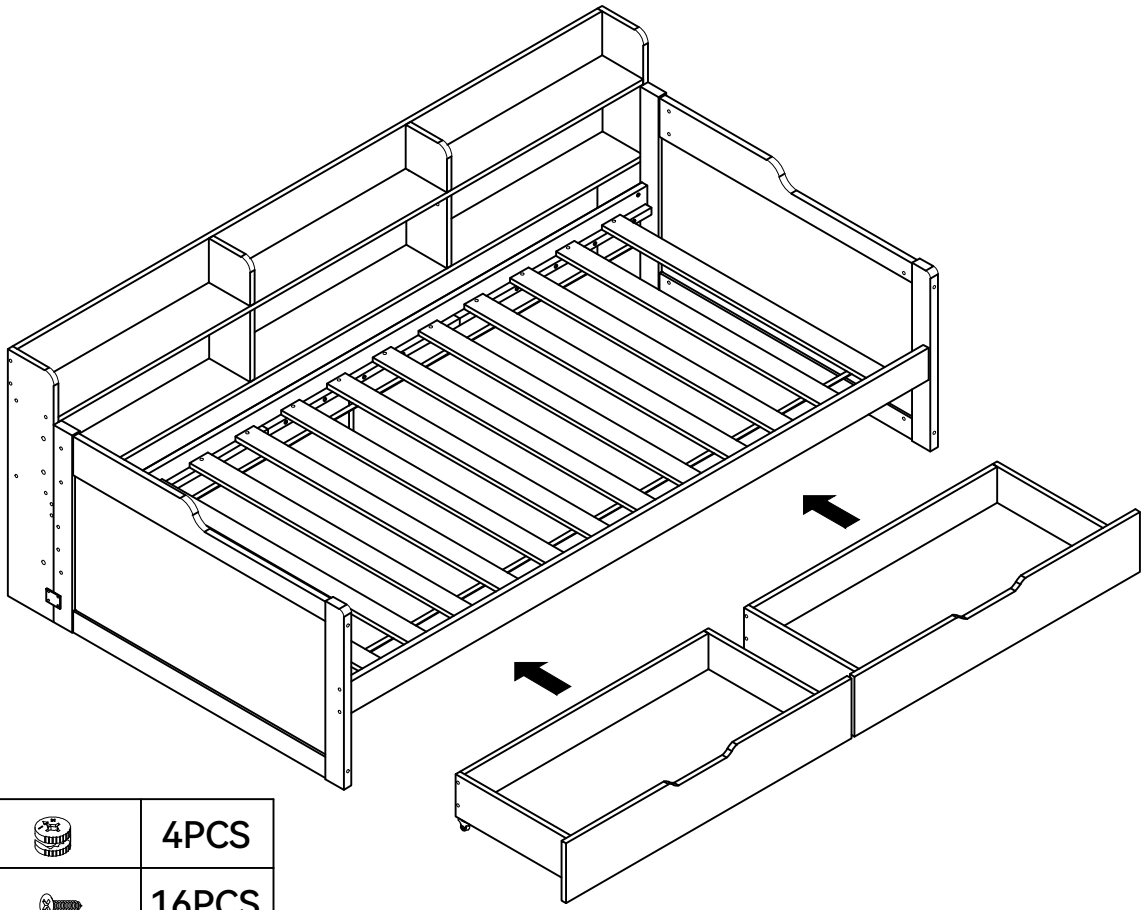

I		4PCS
J	3.5x14	16PCS
O		8PCS

1.Software overview

1.1Overview

LotusLamp X is a free app and an advanced version of the Lotus Lantern app. Users can use this app to automatically recognize various lighting fixtures, such as colored light strips, iridescent light strips, bubble lights, car ambient lights, etc. They can also adjust their brightness, color, set scenes, change dynamic modes and rhythm styles.

Its rhythm function can be used to play local music on the phone, receive sound through the phone microphone, or receive sound through the hardware microphone. If you choose local music rhythm, you need to first download some music files and enable the app's local file access permission.

1.2Performance

The LotusLamp X APP has good usability and compatibility, verified through actual testing on hundreds of mobile phones, and is compatible with over 95% of the phones currently on the market. The APP is compact and convenient, takes up less system resources, has low requirements for mobile phone configuration, has low control delay, good operation feel, and high visual smoothness of light control.

2Operating environment

This app requires a mobile phone with Android 8.0 and iOS 12 version or above, with no restrictions on phone configuration.

3Usage

Note: The download and usage methods for Android and iOS versions are basically the same. Here, the Android version is taken as an example for explanation.

3.1APP Download

Both iOS and Android systems can download the "LotusLamp X" app by scanning the QR code. Open a browser with a 'scan' function QQ、 Scan the "LotusLamp X" QR code using WeChat and other programming tools.

3.2Software operation

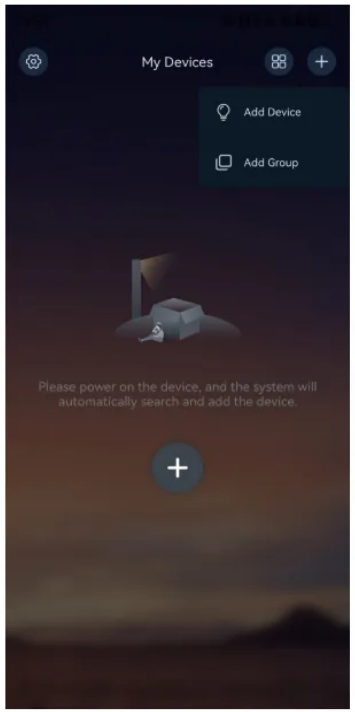

The default interface is displayed for the first time after the APP is installed.

After you power on the device, the system automatically searches for and adds the device.

The system menu page is displayed.

Click to switch list display.

Click to switch grid display.

Click Add Device/Add group in the upper right corner.

Click Add Device.

Click Add Group.

This button is displayed at the bottom of the page when you add a device for the first time without obtaining the system permission, such as Bluetooth.

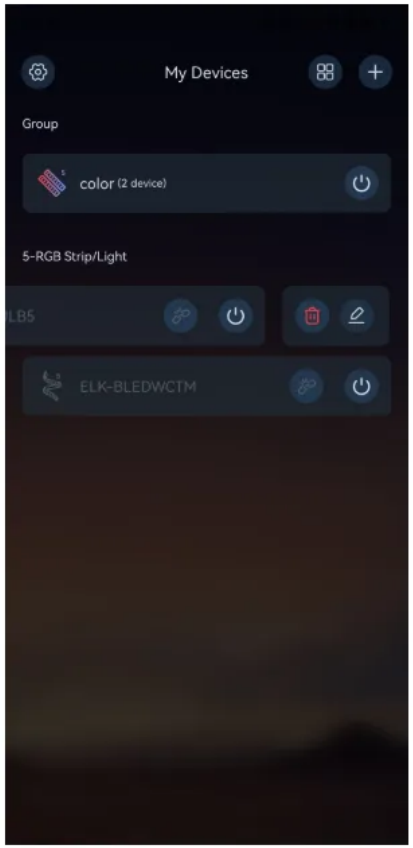

This screen allows you to manage groups and devices.

Click the device/group icon name to enter the device/group control panel.

Swipe left to enter the edit mode.

Connect button, click Connect device.

Switch button, click to control group/device on and off.

Delete button, click Remove device.

Group/Device edit button allows you to edit group/device icon, name, group device/select group, menu style, mode style, and customize functions.

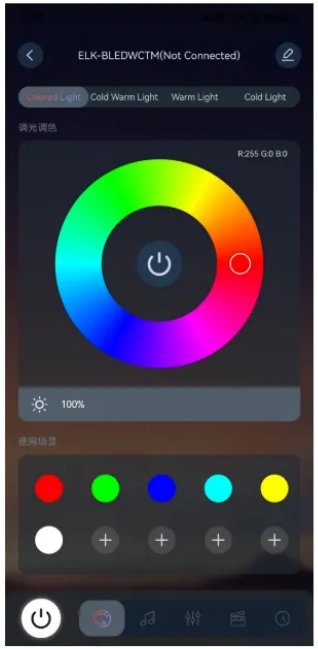

Device control panel color palette. It can adjust the color and brightness of color light, cold and warm light, warm light and cold light.

Slide the color palette to adjust the light color. Click the RGB module in the upper left corner to adjust R, G and B respectively.

Back button to return to the device management page.

Edit button to enter the page for editing device properties.

Customize button to customize the color, long press to delete the color.

Sliding brightness bar adjusts brightness.

RGB switch button, in the middle of the color disk, can control the RGB on and off. Color cannot be adjusted after closing.

Master switch, control lights on and off.

Color button, click to enter the color interface.

Click the rhythm button to enter the rhythm interface.

Click the mode button to enter the mode interface.

Click the scene button to enter the scene interface.

Timing button, tap to enter the timing interface.

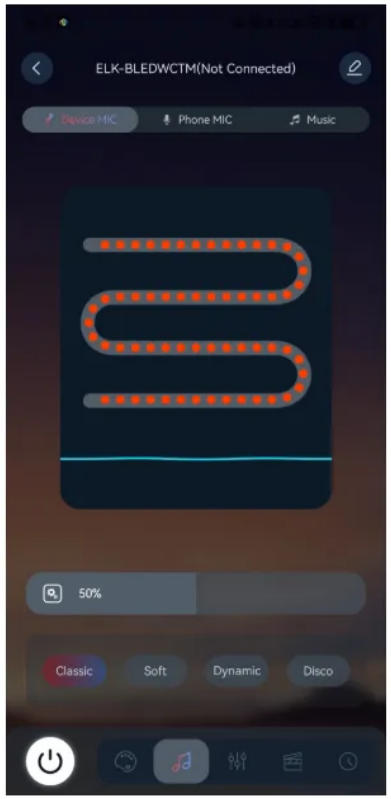

Light rhythm control interface. Select rhythmic sound source and rhythmic mode effect.

External microphone interface, select the controller hardware integrated microphone as a sound collector, capture the music of the surrounding environment and control the change of the light with the change of the rhythm and intensity of the music.

On the mobile microphone screen, select the mobile microphone as the sound collector.

Music interface, play the music stored in the phone, the light changes with the music.

Control the sensitivity of sound acquisition, slide to select the appropriate value to make sound acquisition sensitive and avoid random lighting.

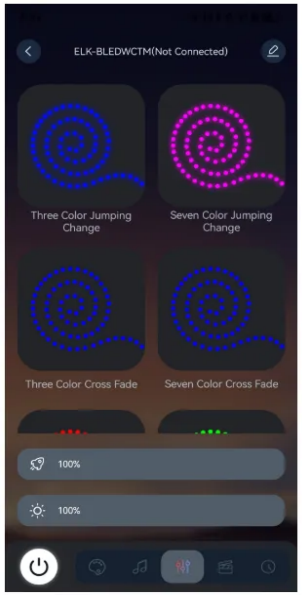

Dynamic mode interface.

Speed slider to control the speed of dynamic mode.

Brightness slider to control the maximum brightness for dynamic mode.

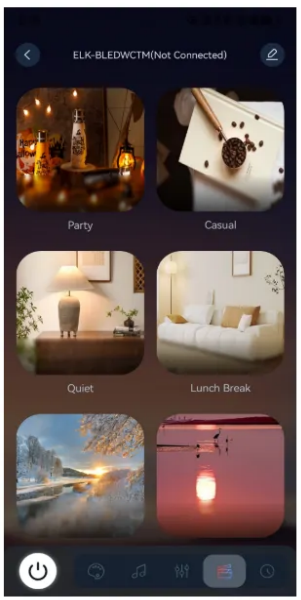

Lighting scene setting screen.

Click on the picture to set the corresponding lighting scene.

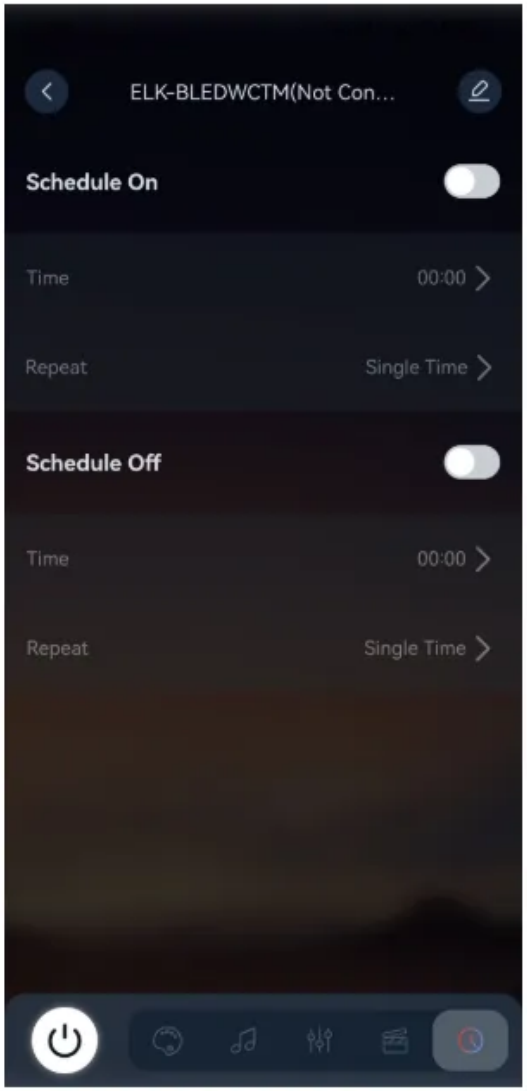

Lights on and off schedule setting page.

Enable or disable the schedule of lights on/off.

00:00 Time setting of lights on/off.

Single Time Repeat mode, single or weekly loop.

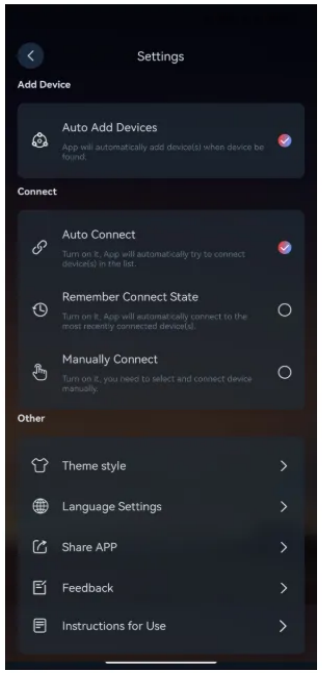

System settings page. Including strategy of device search, append, connnect. Interface language selection, theme style setting, usage instructions and so on.

Add devices automatically. This parameter is selected by default. If an unconnected device is nearby, it is automatically added to the device list.

Automatic connection, selected by default. After this function is enabled, the device in the device list is automatically connected.

Memory connection: When enabled, the recently connected devices are automatically connected.

Manually connect. After opening, click the device connection button to connect.

Theme style, can choose dark mode/fresh mode, custom theme background.

Language Settings, select the APP interface display language.

Share the APP, you can share the APP with others.

Question feedback, questions and comments can be submitted.

Use instructions, see the detailed description of the function.

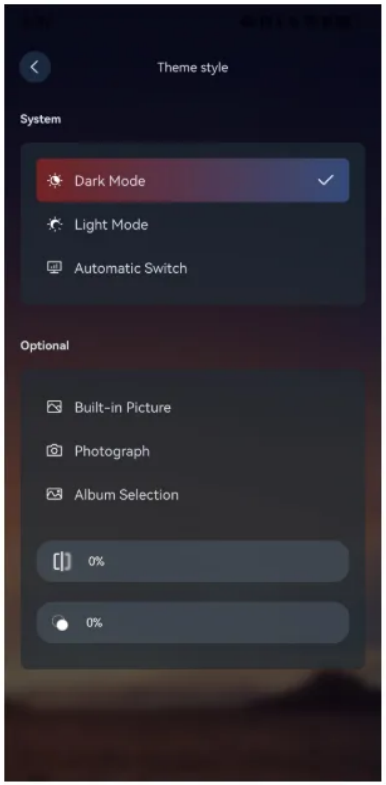

Theme style setting page. You can select two styles of system integrated or select a picture for your wallpaper.

Dark Mode: Select a dark theme.

Light Mode: Select a light theme.

Automatic Switch: Switch dark or light mode according to the mobile phone system setting of theme.

Picture Gallery: Select a picture from picture gallery of system built-in.

Photograph: Turn on the camera, shoot, as your wallpaper.

Album Selection, Select a picture from your phone's album.

Adjust the image sharpness.

Adjust the image transparency.

Certificate – Сертификат – 證明書 – Certificat – 증명서 – شهادة

Shenzhen ZKT Technology Co., Ltd.
1/F, No. 101, Building B, No. 6, Tangwei Community Industrial Avenue,
Fuhai Street, Bao'an District, Shenzhen, China

Certificate of Compliance

Certificate Number: ZKT-250819L20001C

Certificate's Holder	:	Shenzhen xu xing technology co., LTD Floor 3, building C, Huaze hi tech Industrial Park, Shiyan street, Bao'an District, Shenzhen
Manufacturer	:	Shenzhen xu xing technology co., LTD Floor 3, building C, Huaze hi tech Industrial Park, Shiyan street, Bao'an District, Shenzhen
Trade Mark	:	/
Product	:	Colorful light strip
Model(s)	:	XX5050RGB-30D XX5050RGB-60D, XX2835-120D, XX2835-60D, XX2835-84D

REQUIREMENT	STANDARD	Report No.
Art.3.1(a) Safety	EN IEC 62031:2020+A11:2021	ZKT-250819L20002S
Art.3.1(a) Health	EN 62479:2010 EN 50663:2017	ZKT-250819L20001E-2
Art.3.1(b) EMC	ETSI EN 301 489-1 V2.2.3 (2019-11) ETSI EN 301 489-3 V2.3.2 (2023-01)	ZKT-250819L20001E
	ETSI EN 300 220-1 V3.1.1 (2017-02) ETSI EN 300 220-2 V3.2.1 (2018-06)	ZKT-250819L20001E-1

This Attestation of Compliance is issued on for electrical equipment below the voltage limits of Radio Equipment Directive (RED) 2014/53/EU. The essential requirement are fulfilled accordingly based on the technical specifications applicable at the time of issuance.

CE

Approved
Manager
Jan. 21, 2025

This Certificate of Conformity is based on single evaluation of the submitted sample(s) of the above mentioned product. It does not imply an assessment of the whole product and relevant . Directives to be observed.

Shenzhen POCE Technology Co.,Ltd.

H Building, Hongfa Science and Technology Park,
Tangtou, Shiyan, Bao'an District, Shenzhen, China

CERTIFICATE OF CONFORMITY

Certificate No.	:	POCE220829293QCR
Applicant	:	Shenzhen Xuxing Technology Co., Ltd
Address	:	Floor 3, Building C, Huaze Hi-Tech Industrial Park, No. 108 Zhushi Road, Shiyan Street, Bao'an District, Shenzhen
Manufacturer	:	Shenzhen Xuxing Technology Co., Ltd
Address	:	Floor 3, Building C, Huaze Hi-Tech Industrial Park, No. 108 Zhushi Road, Shiyan Street, Bao'an District, Shenzhen
Product	:	Led lights bring
Trade Name	:	
Model(s)	:	XX5050-RGB-60D, XX5050-RGB-30D, XX5050-RGB-72D, XX5050-RGB-96D, XX5050-RGB-120D, CLB1-2835-1, CLB1-2835-0, XX2835-W/Y-120D, XX2835-W/Y-60D, XX2835-W/Y-240D, XX2835-W/Y-238D, XX2835-W/Y-168D, XX2835-W/Y-224D, XX2835-W/Y-118D, XX2835-W/Y-162D, XX2835-W/Y-124D, XX2835-W/Y-170D, XX2835-60D, XX2835-120D, XX2835-150D, XX2835-180D
Test Report No.	:	POCE220829293QRR
Test Standards	:	**IEC 62321-3-1:2013; IEC 62321-4:2013+A1:2017; IEC 62321-5:2013; IEC 62321-6:2015; IEC 62321-7-1:2015; IEC 62321-7-2:2017; IEC 62321-8:2017**

The EUT described above has been tested by us with the listed standards and found in compliance with the council **RoHS Directive(EU) 2015/863 amending Annex II to Directive 2011/65/EU.** It is possible to use **CE** marking to demonstrate the compliance with this **RoHS** Directive.

RoHS POCE CE

For Chief Executive / Jerry Yang
Date: Sep. 02, 2022

This certificate of conformity is based on a single evaluation of the submitted sample(s) of the above mentioned product. It does not imply an assessment of the whole production and other relevant directives have to be observed.

扫一扫关注 扫码查证书

Web: http://www.poce-cert.com Tel: +86-755-29113252 E-mail: service@poce-cert.com