Assembling Instruction

Generating Drawings

ATTENTION

If there is any missing, please kindly send us messages to let us know the name of missing part regarding to the first page of instructions.
We will send replacement to you asap. We are concerned about each customer's experience, if there is any loss or damage, please contact us at any time, we will provide effective solutions.

Please attach your Oder ID so that we can assist you better.

General Assembly Guidelines

I. Ensure that all parts and hardware are available before beginning assembly.

II. Follow each step carefully to ensure the proper assembly of this product.

III. Two people are recommended for ease in the assembly of this product.

IV. The three main types of hardware used to assemble this product are : wood dowels , screws and bolts.

VI. A Phillips head screwdriver is required for the assembly of this product .

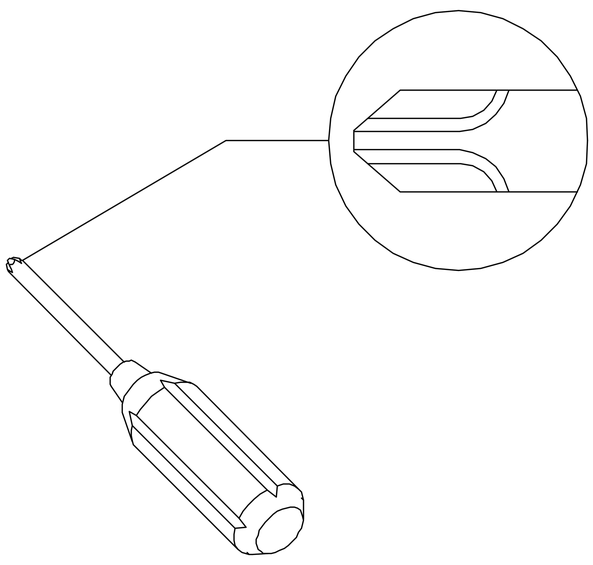

VII. Power tools should not be used to assemble this product .

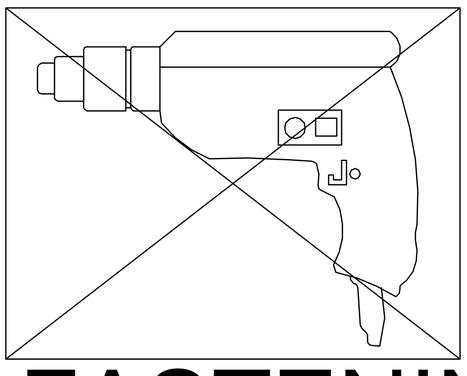

CAM LOCK/BOLT FASTENING INTRODUCTION

(You will use it during assembly)

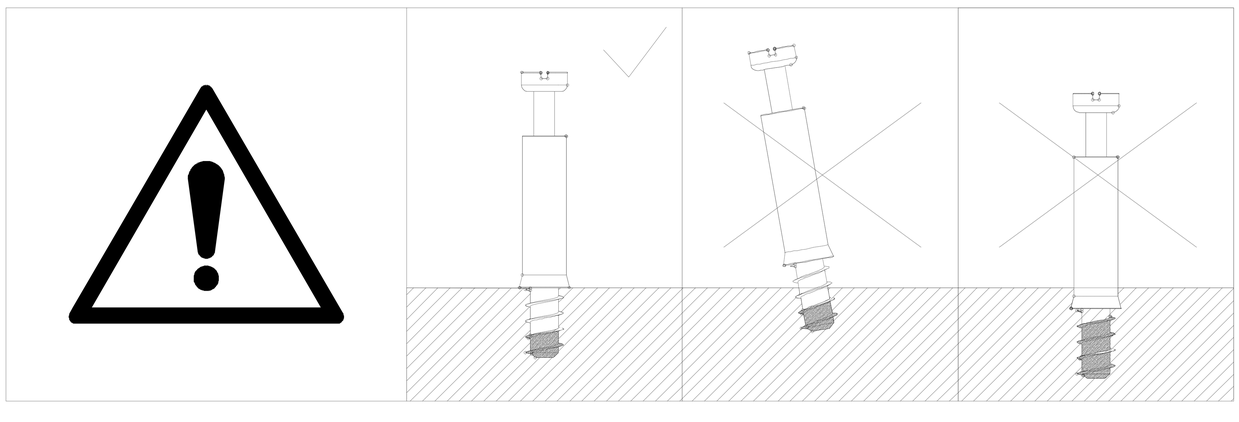

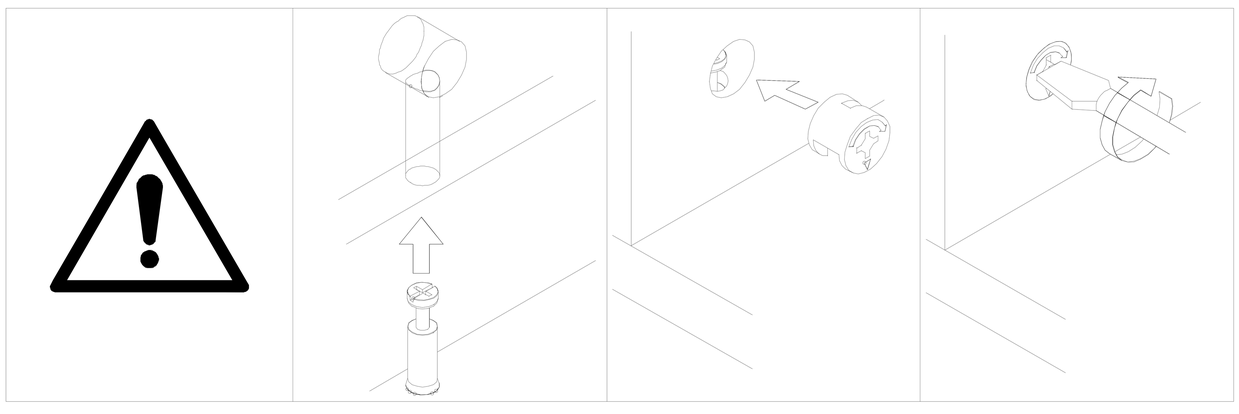

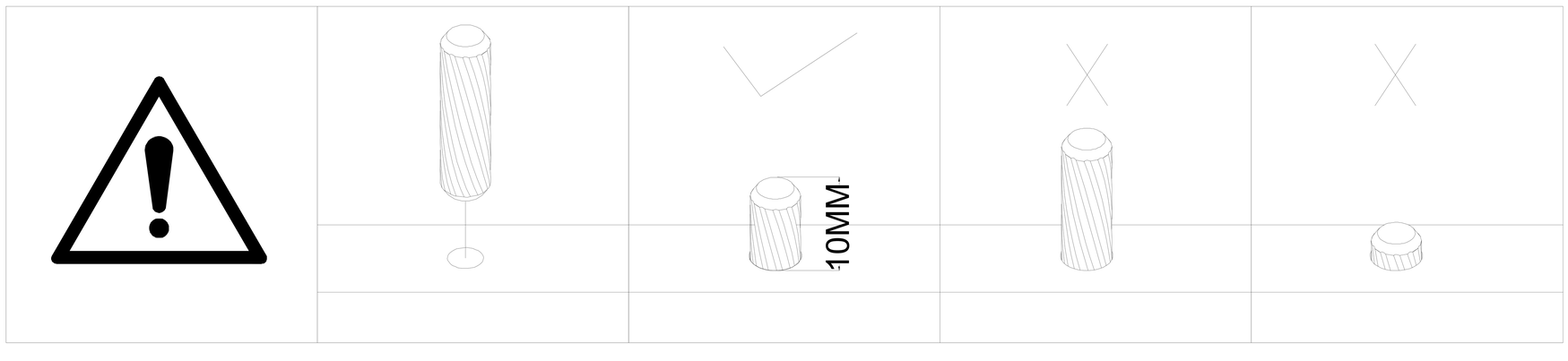

Hardware Provided

A

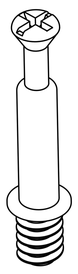

X20+2

B

X20+3

C

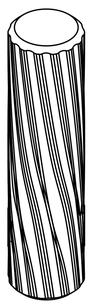

X22+3

D

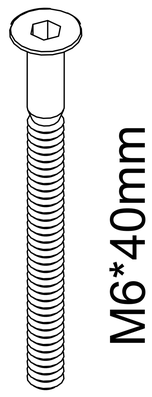

X 12+2

E

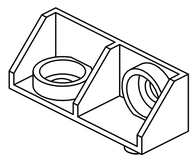

X **12+1**

F

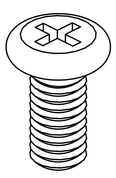

X **24+2**

G

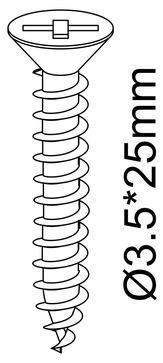

X **36+4**

H

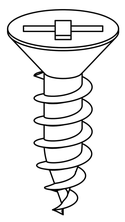

X **24+3**

I

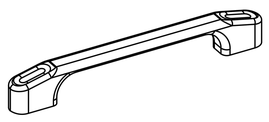

X4

J

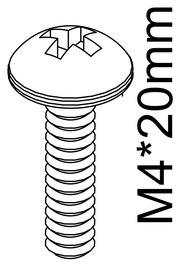

X8+1

K

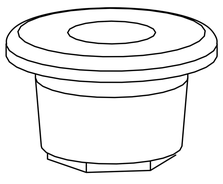

X **8+2**

L

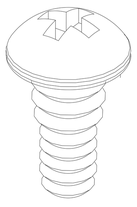

X **8+2**

M

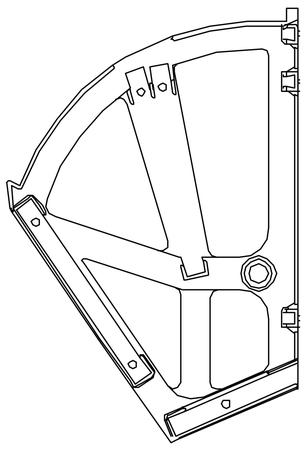

X **4**

N

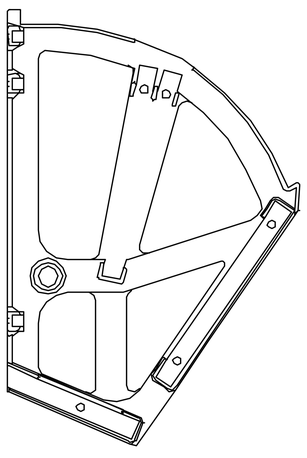

X4

O

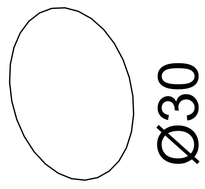

X6

Hardware Provided

P

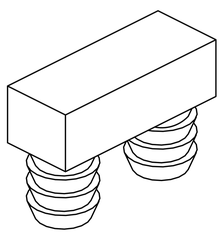

X8+2

Q

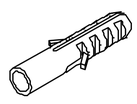

X **2**

R

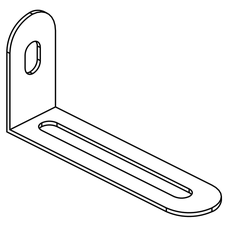

X **2**

S

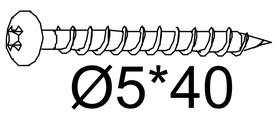

X **2**

T

X **2**

U

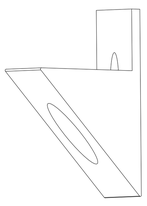

X8+1

V

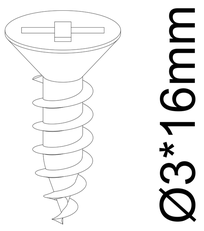

X8+1

W

X1

Parts Identification

1

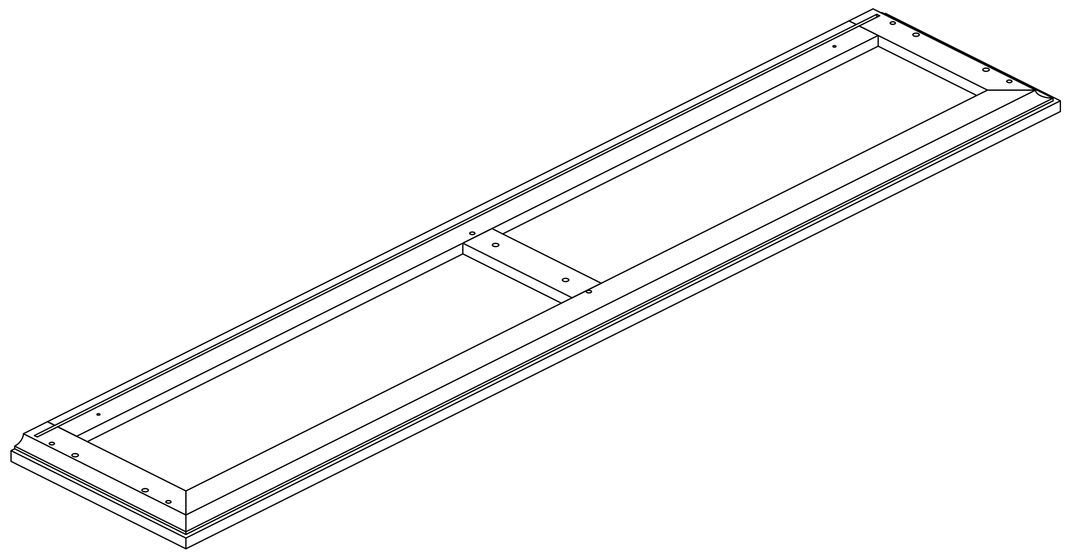

X **1**

2

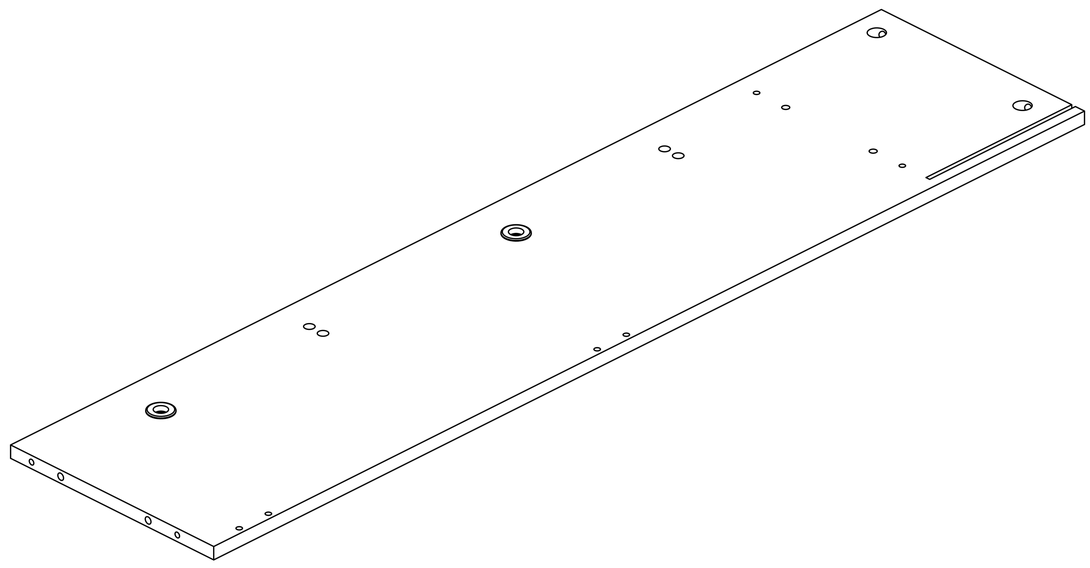

X **1**

3

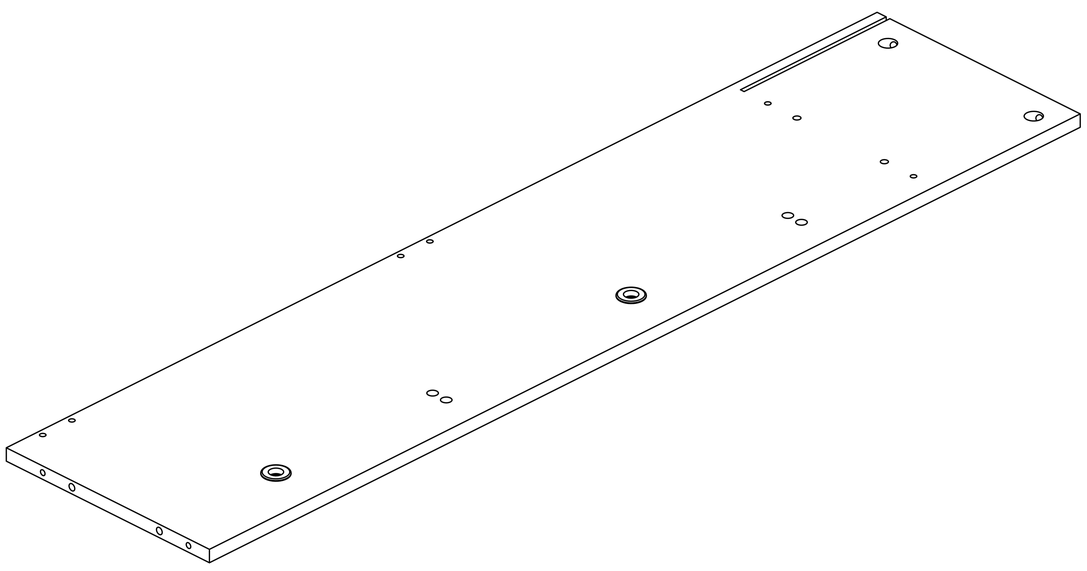

X **1**

4

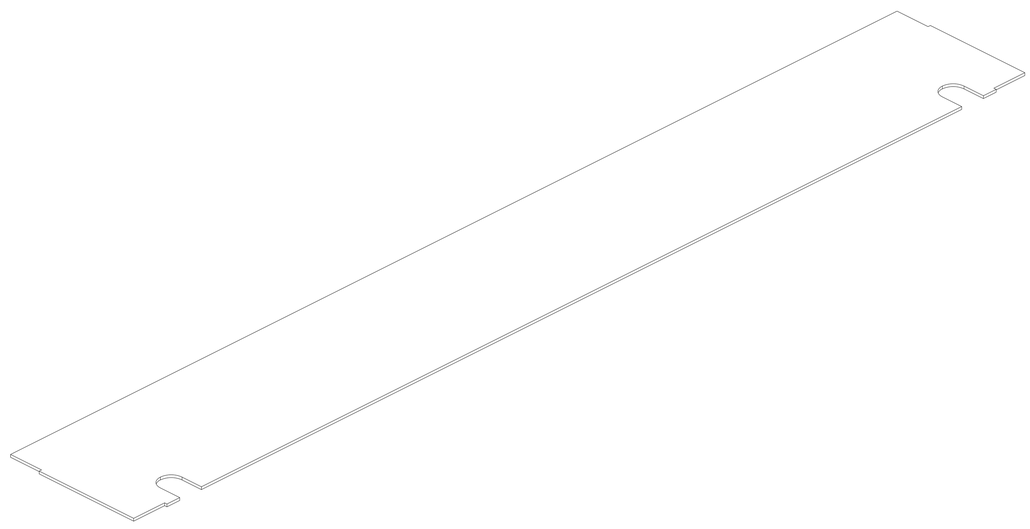

X1

5

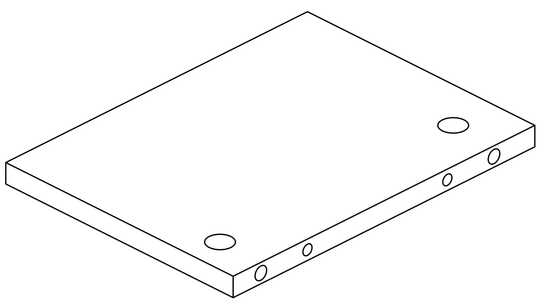

X **1**

6

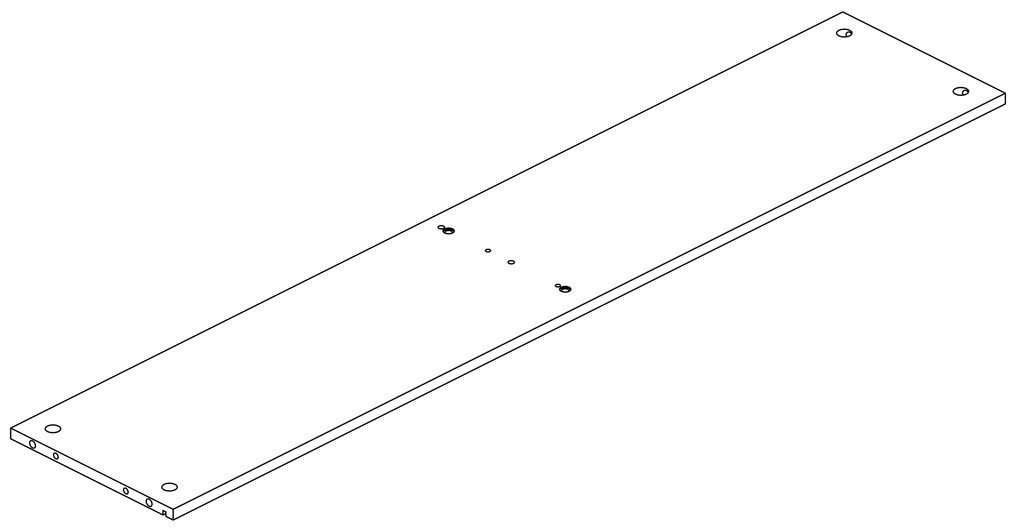

X1

Parts Identification

7

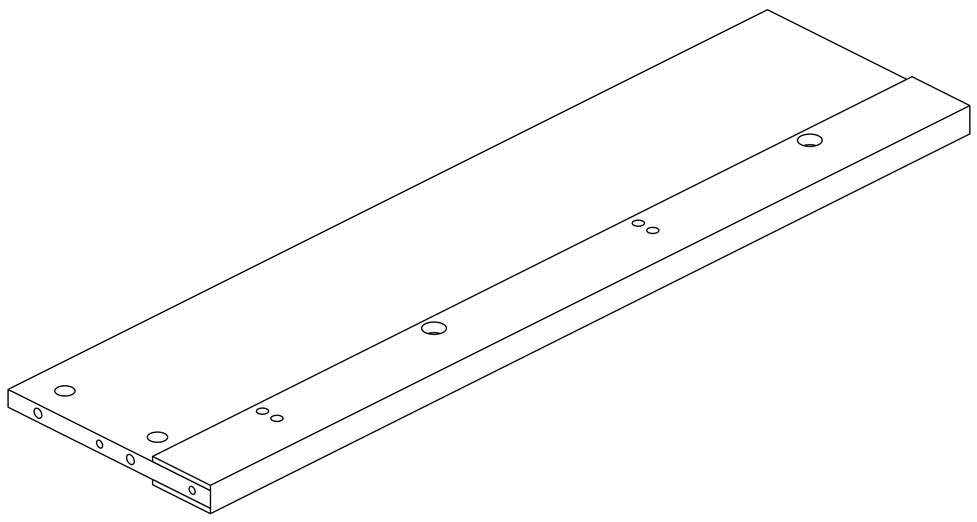

X **1**

8

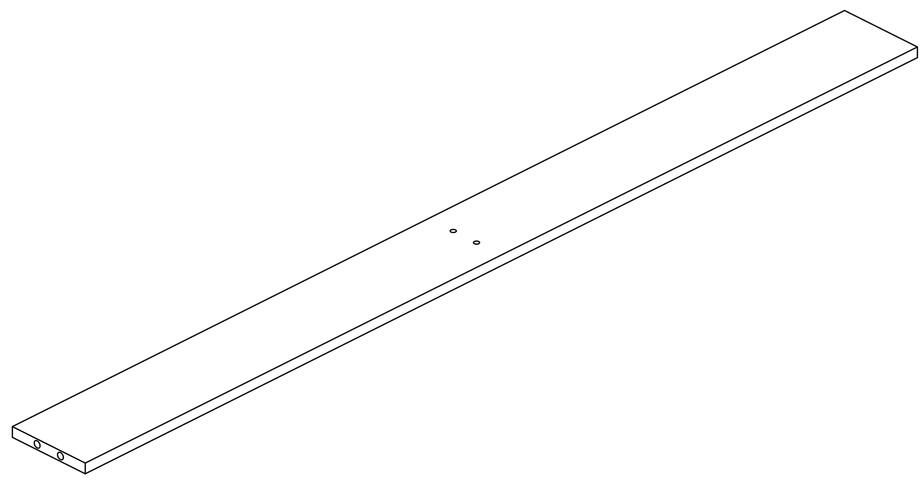

X1

9

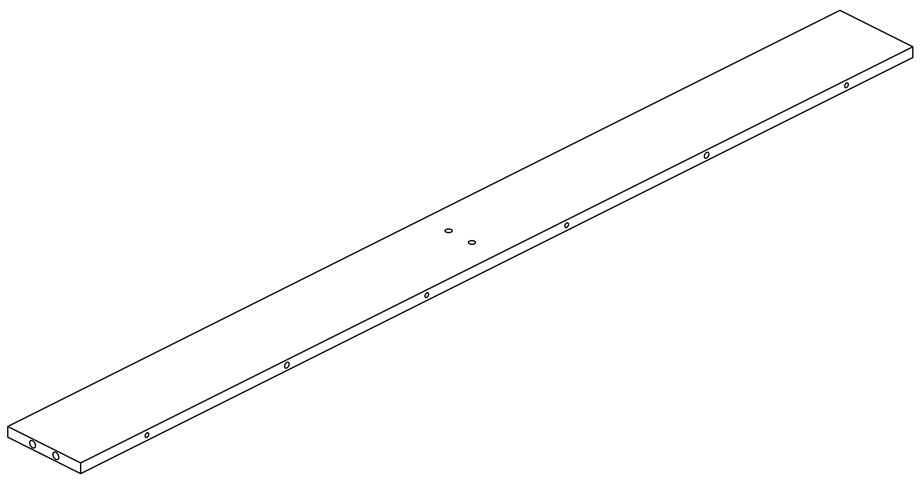

X1

10

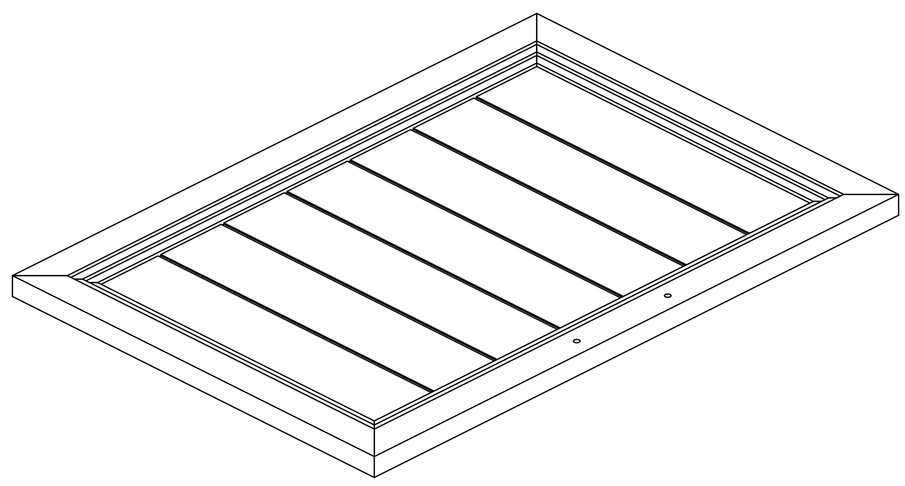

X4

11

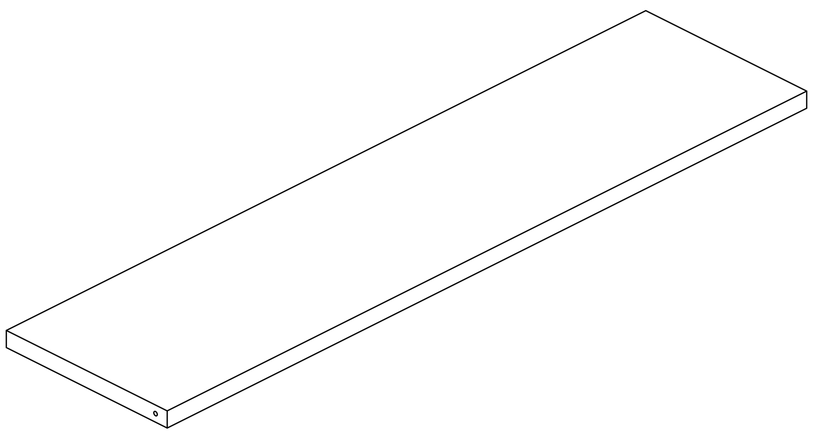

X **4**

12

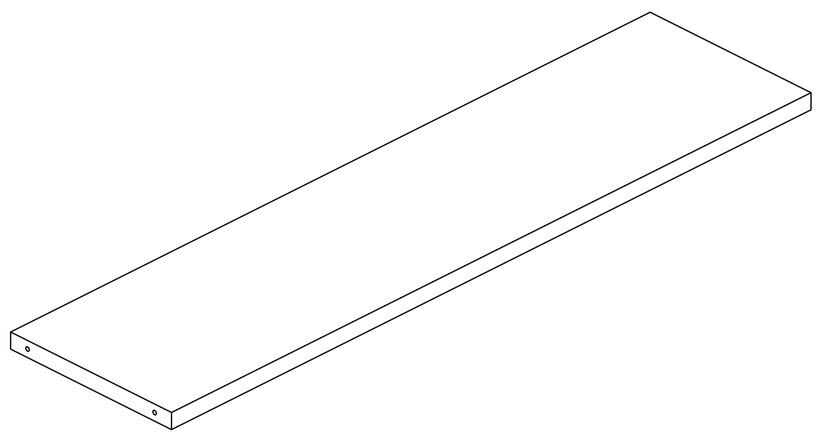

X **4**

Parts Identification

13

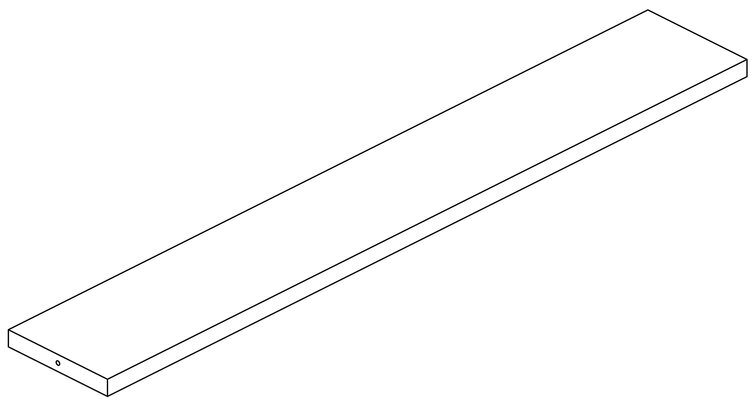

X **4**

14

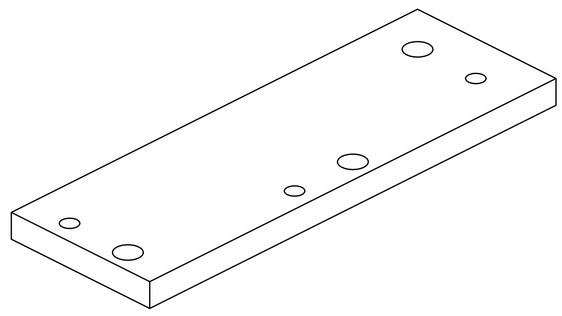

X **1**

15

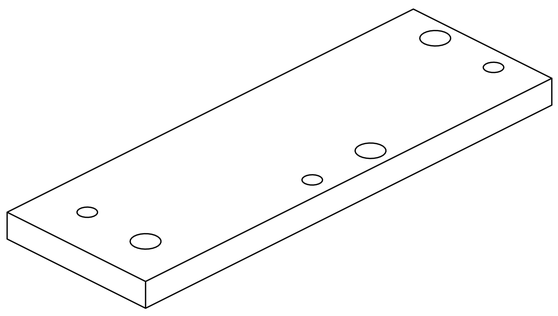

X **1**

16

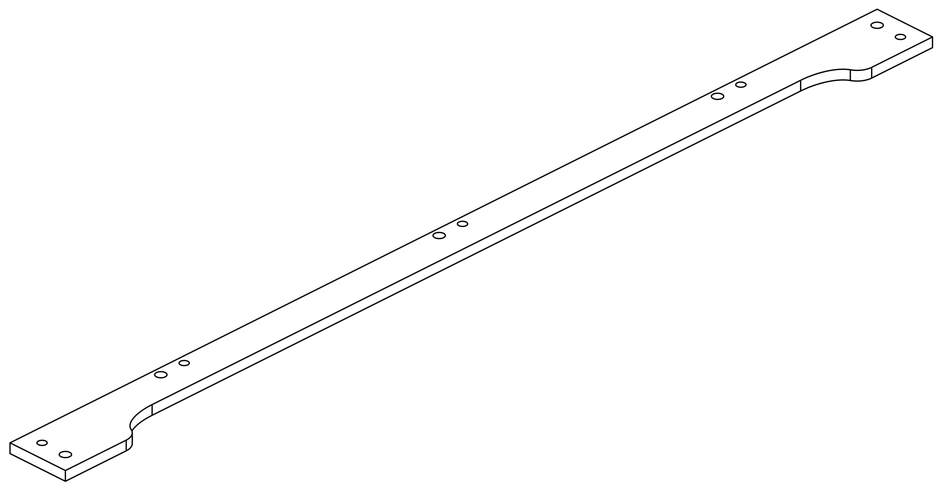

X **1**

17

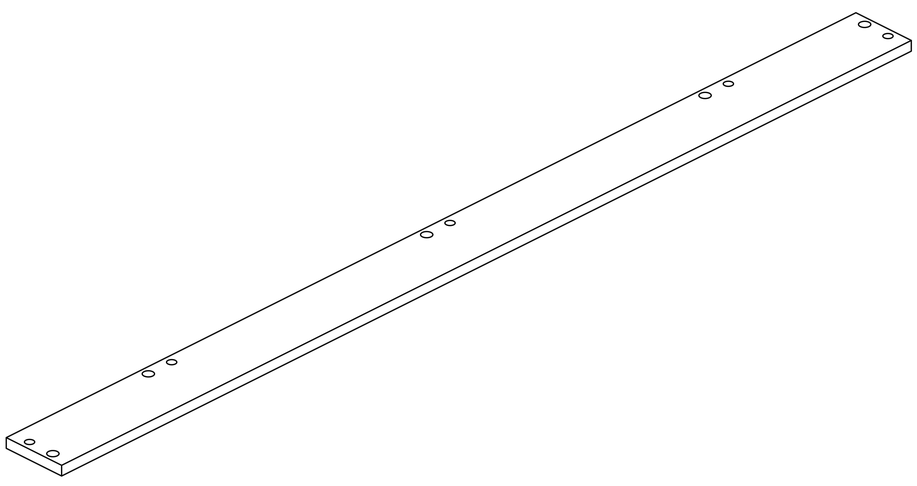

X **1**

18

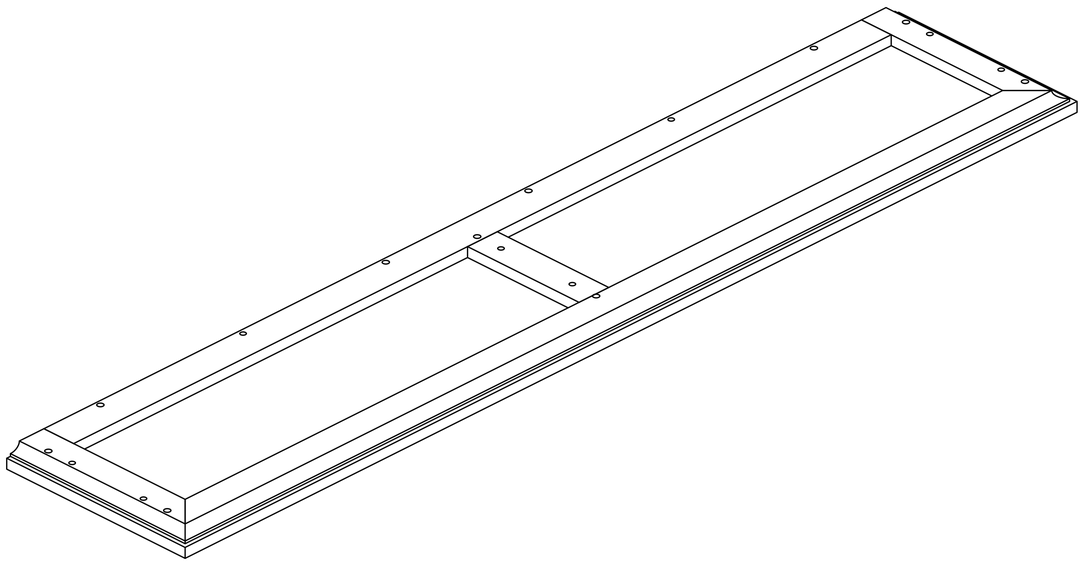

X **1**

Exploded View

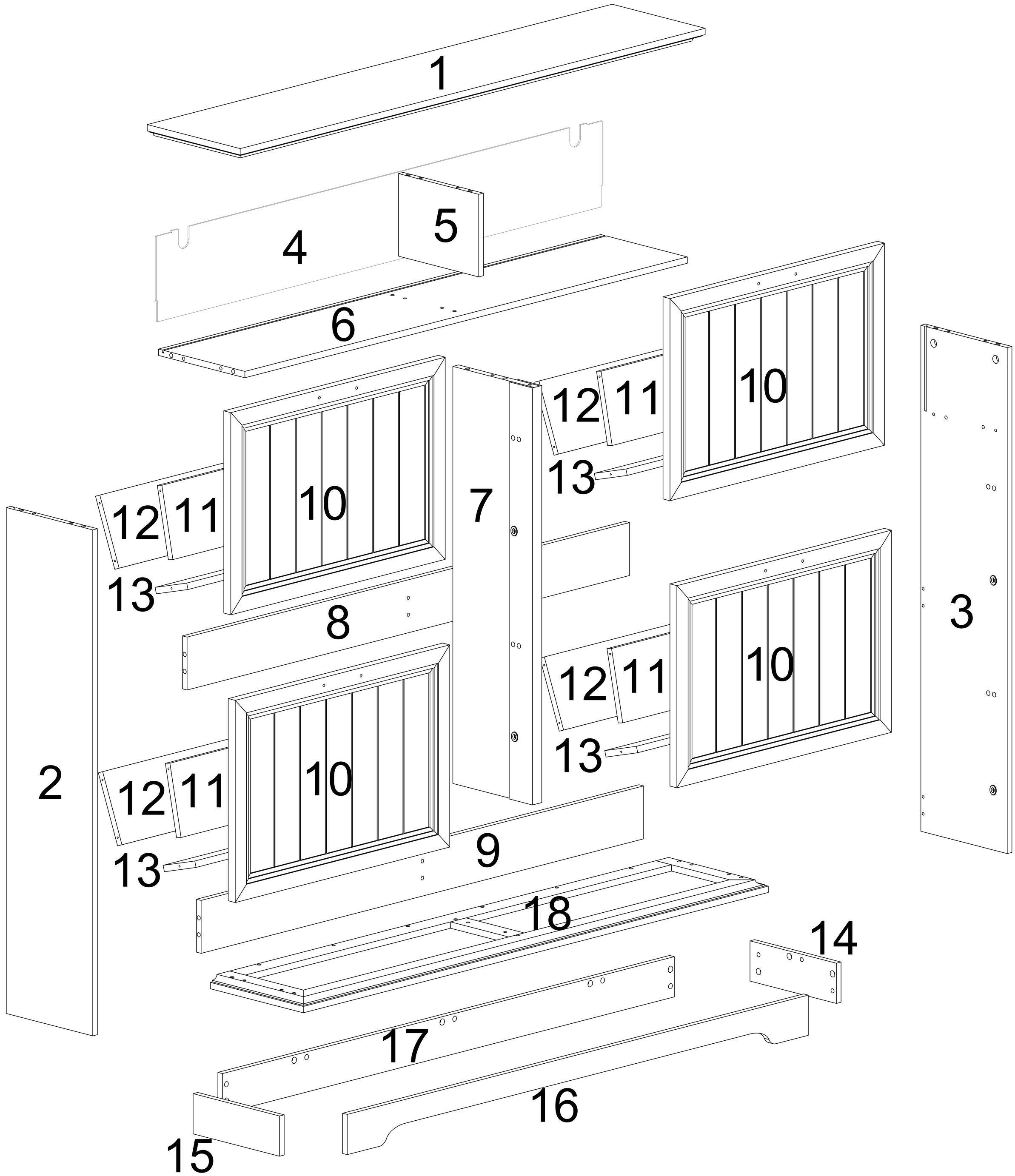

Step 1

A
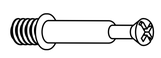
x12

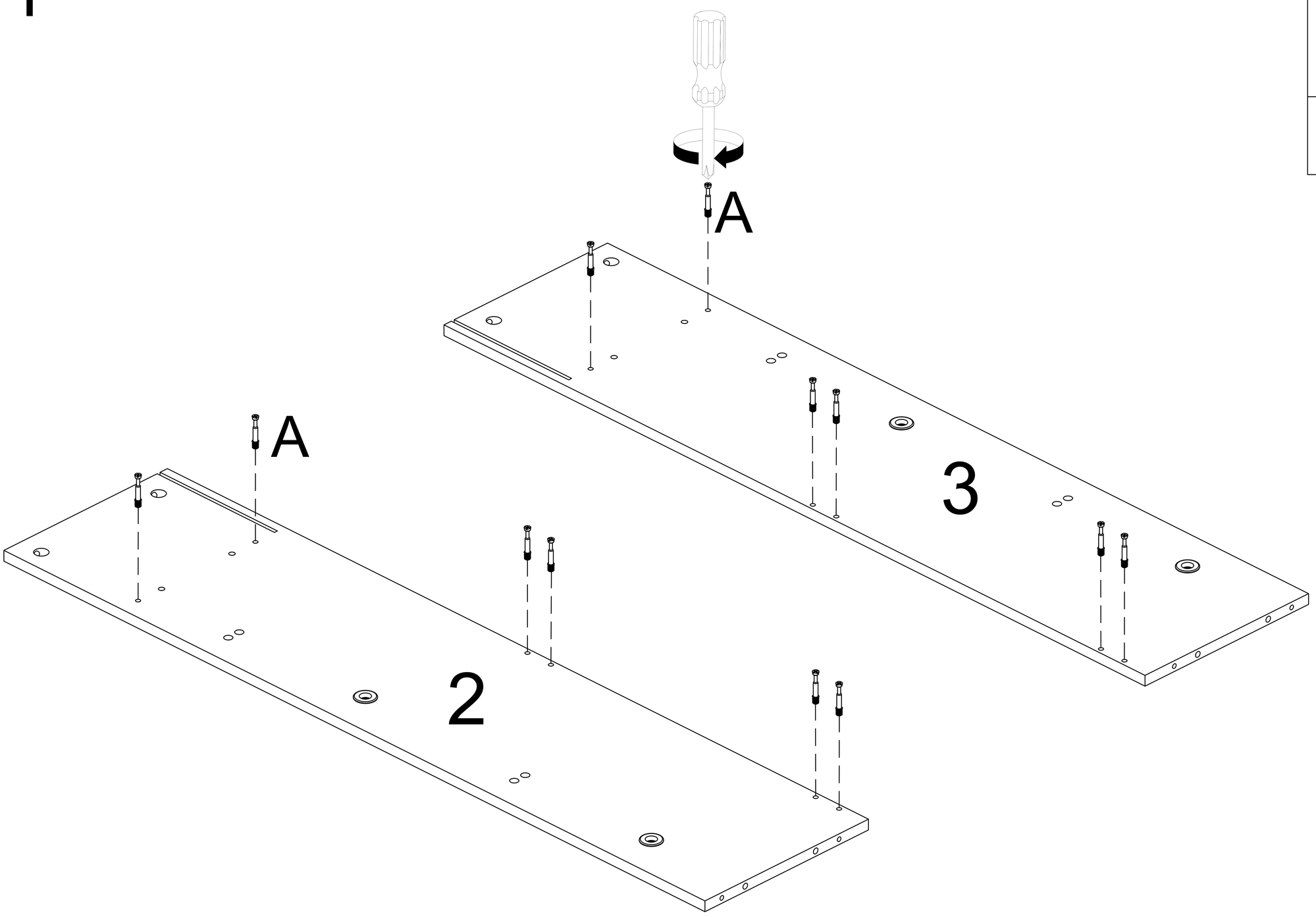

Step 2

P
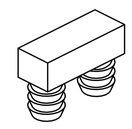
x4

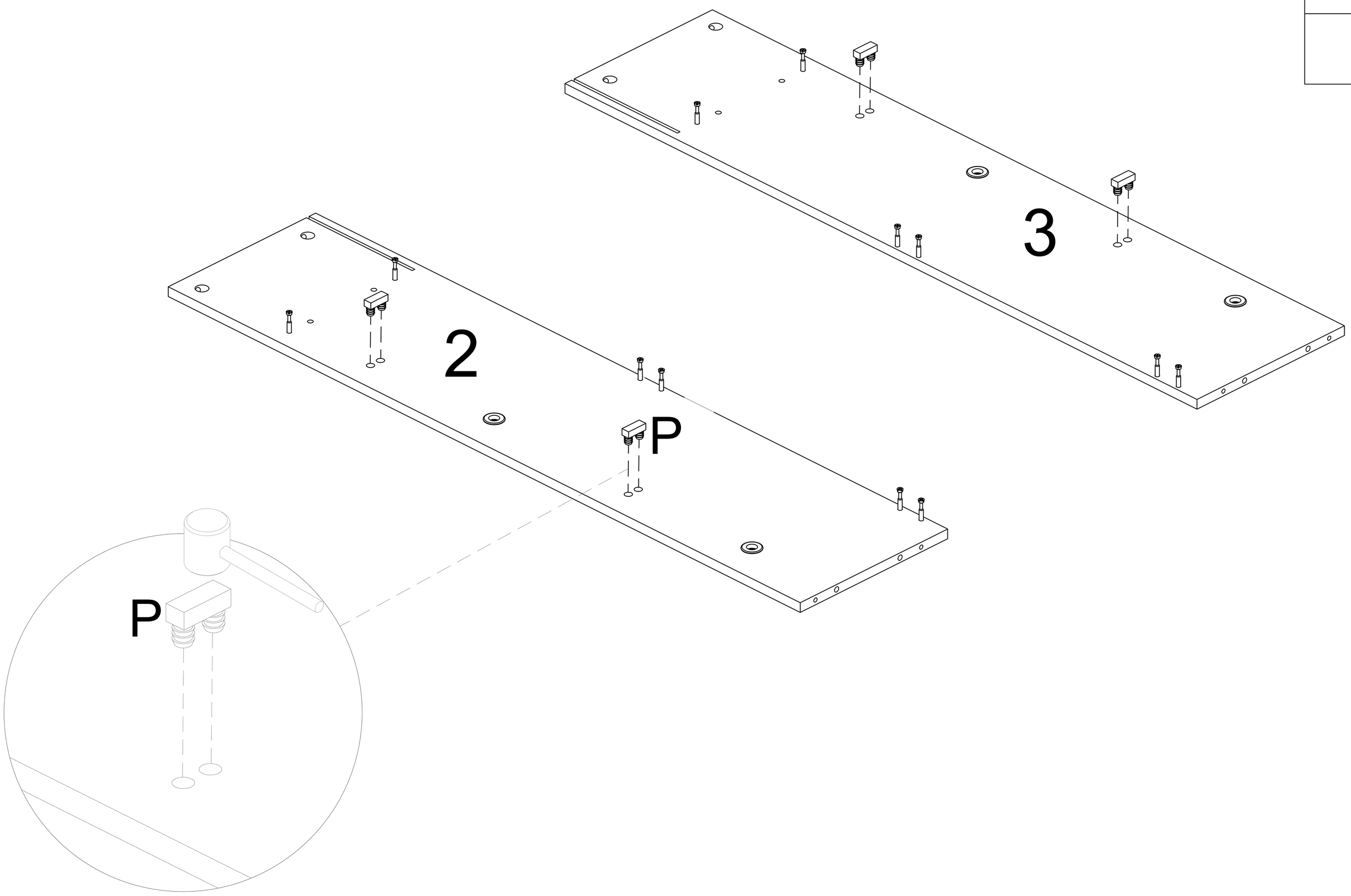

Step 3

Note:This step involves only one board #7;

P
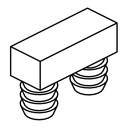
x4

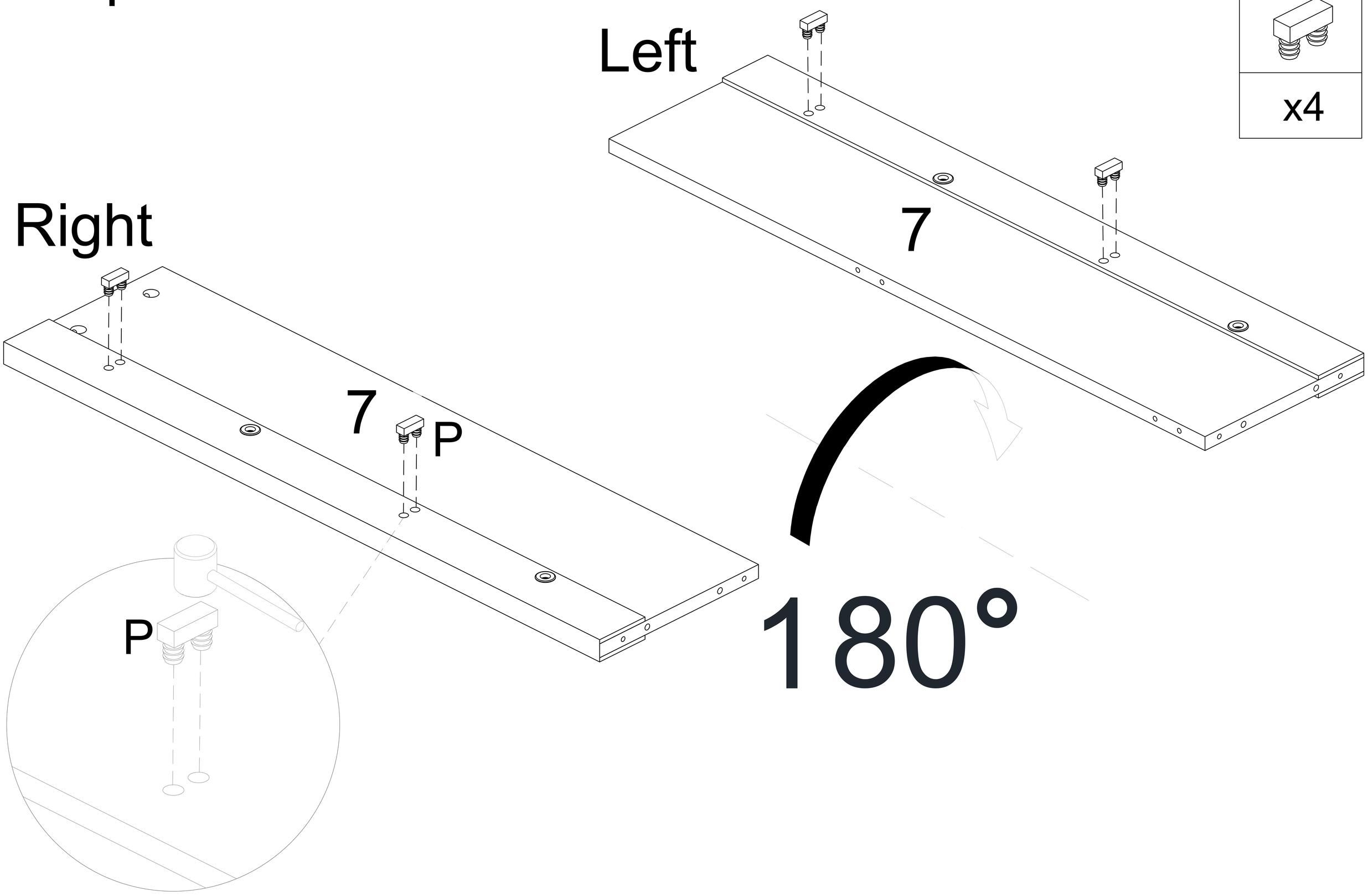

Step 4

A
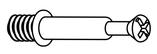
x6

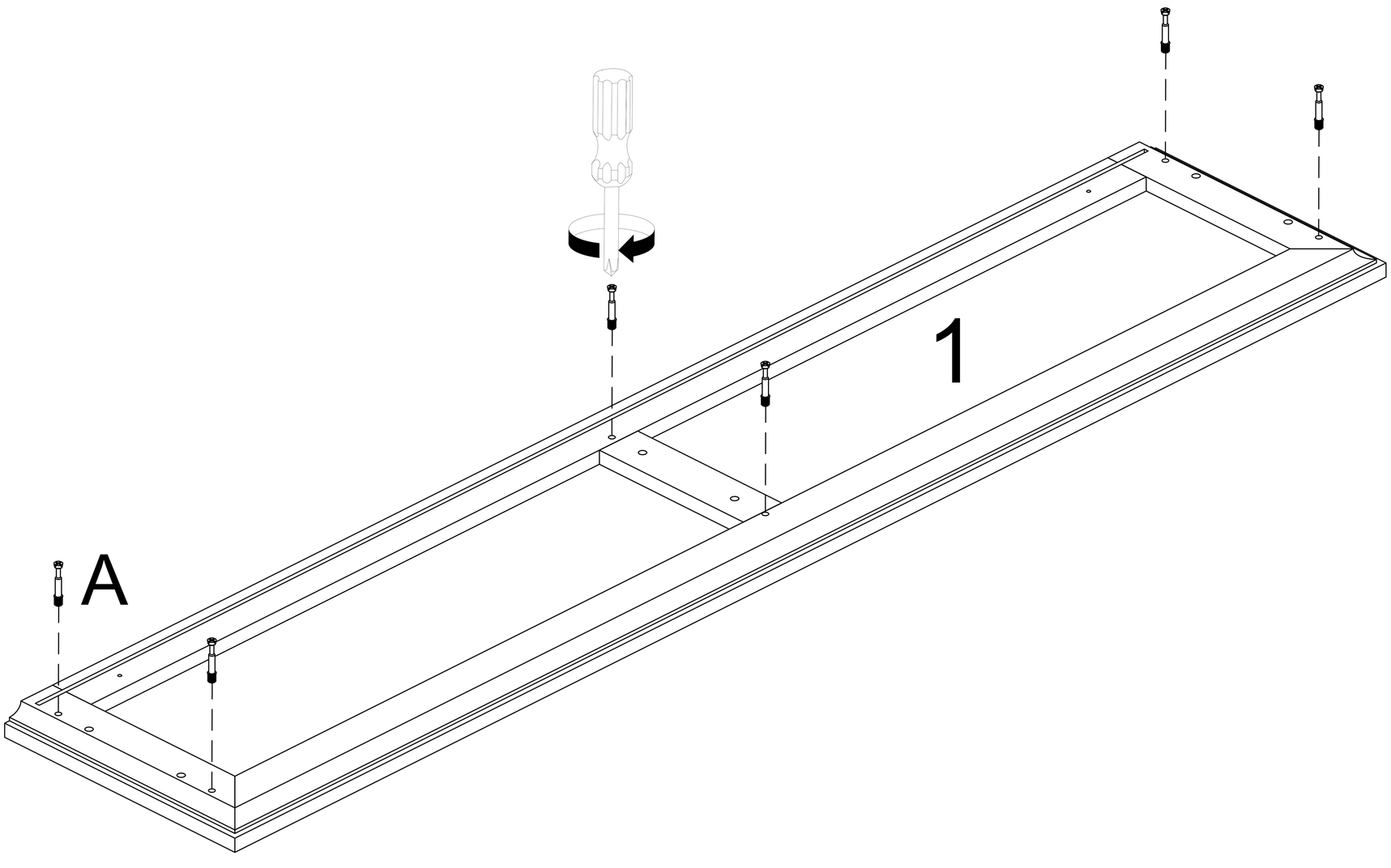

Step 5

Note:Use #T 19mm screws

T	R
Ø3.5*19	
x2	x2

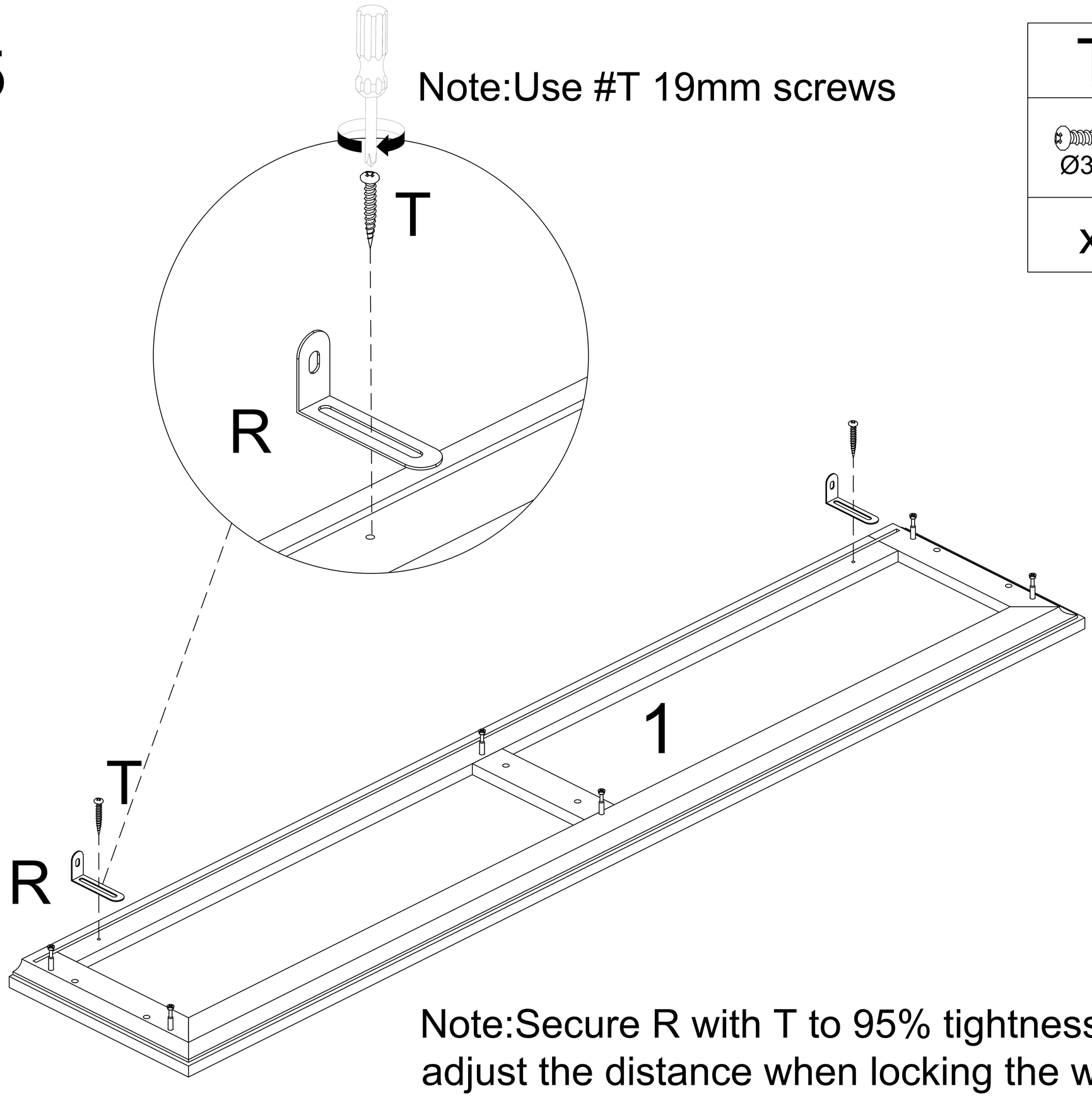

Note:Secure R with T to 95% tightness,you can adjust the distance when locking the wall;

Step 6

A
x2

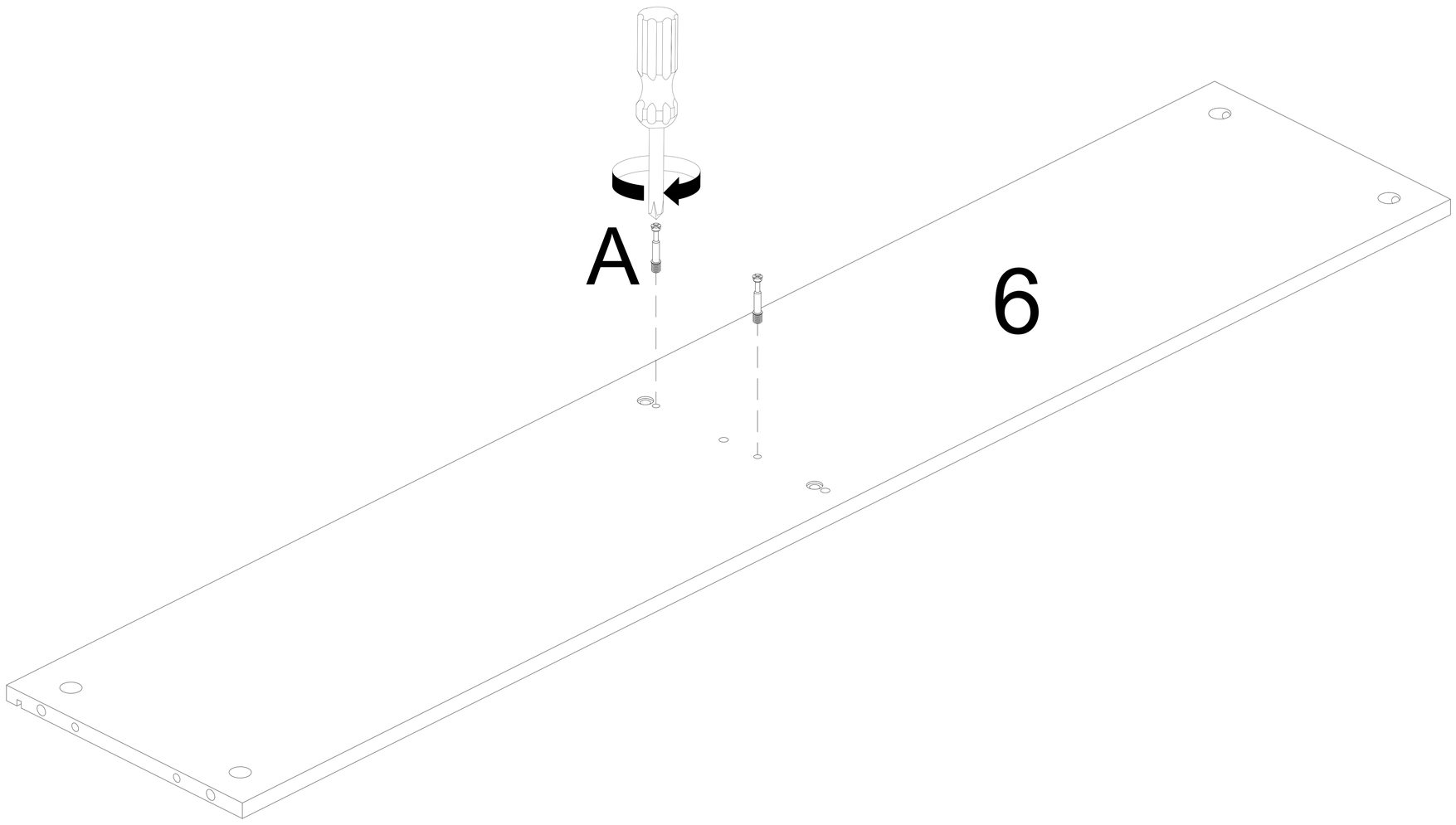

Step 7

Note:The cam lock hole on board #5 should be toward left

D	C
	M6*30mm
x2	x2
	W
	x1

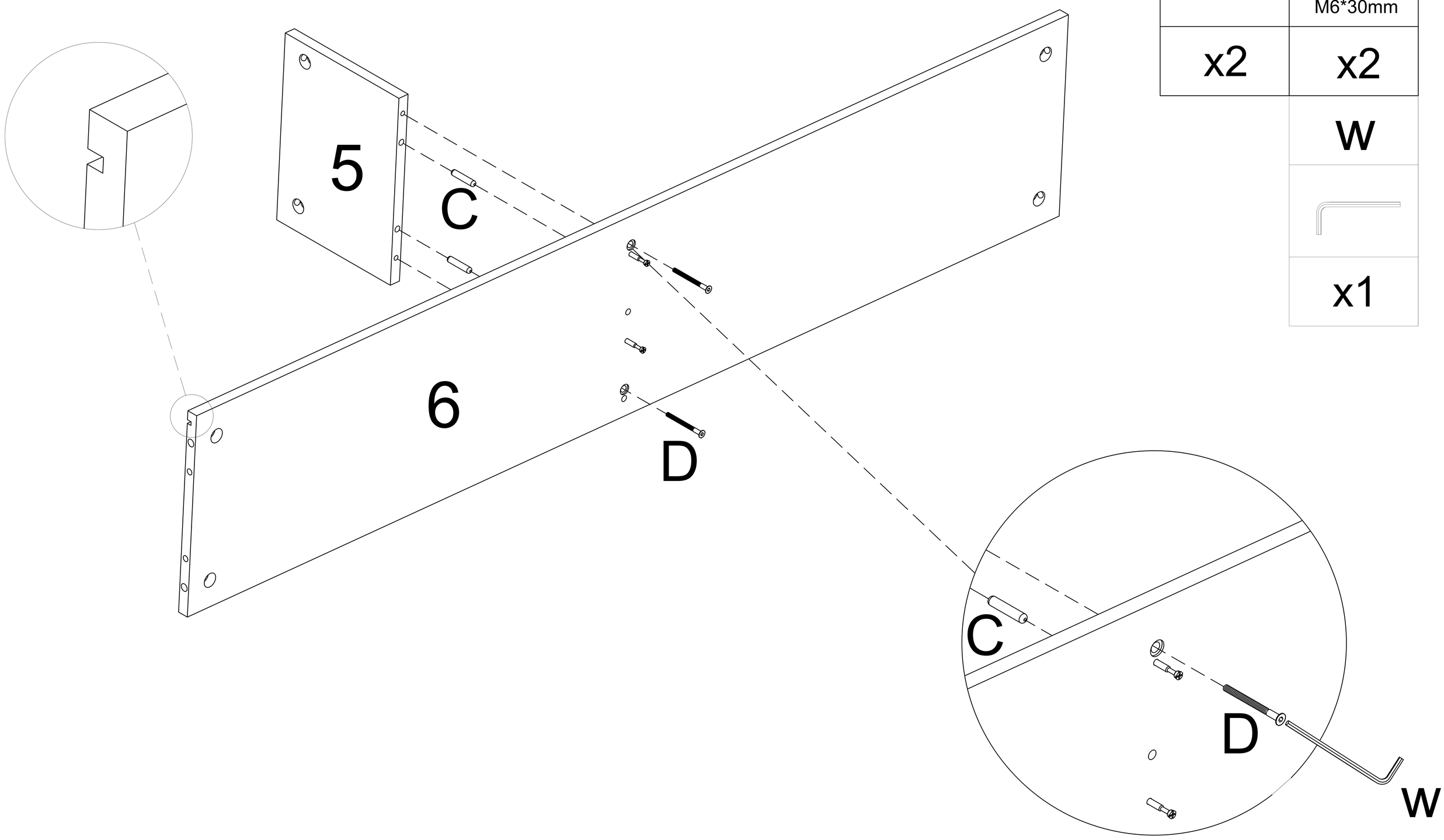

Step 8

B	C
	M6*30mm
x2	x2

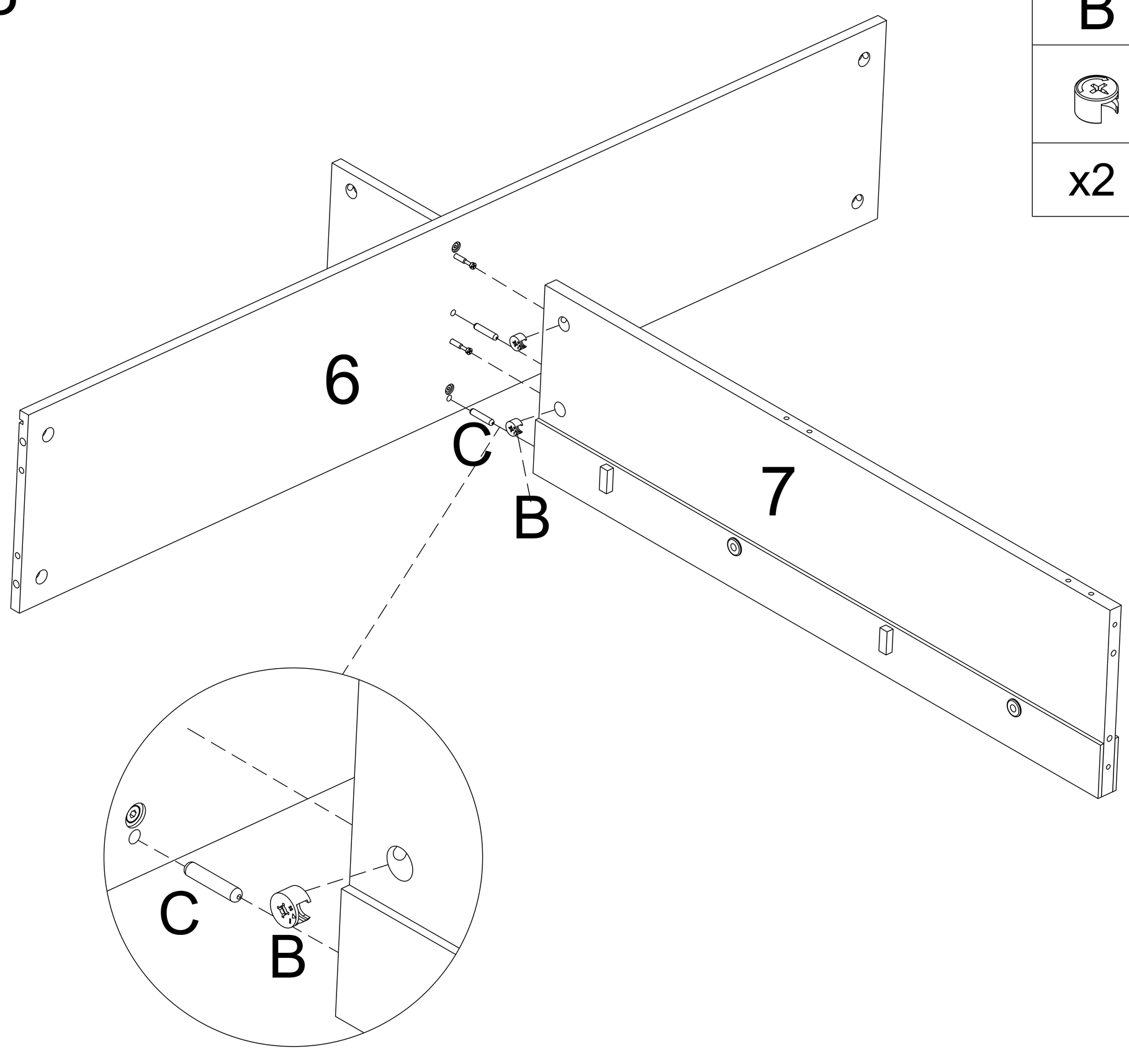

Step 9

G
Ø3.5*25mm
x4

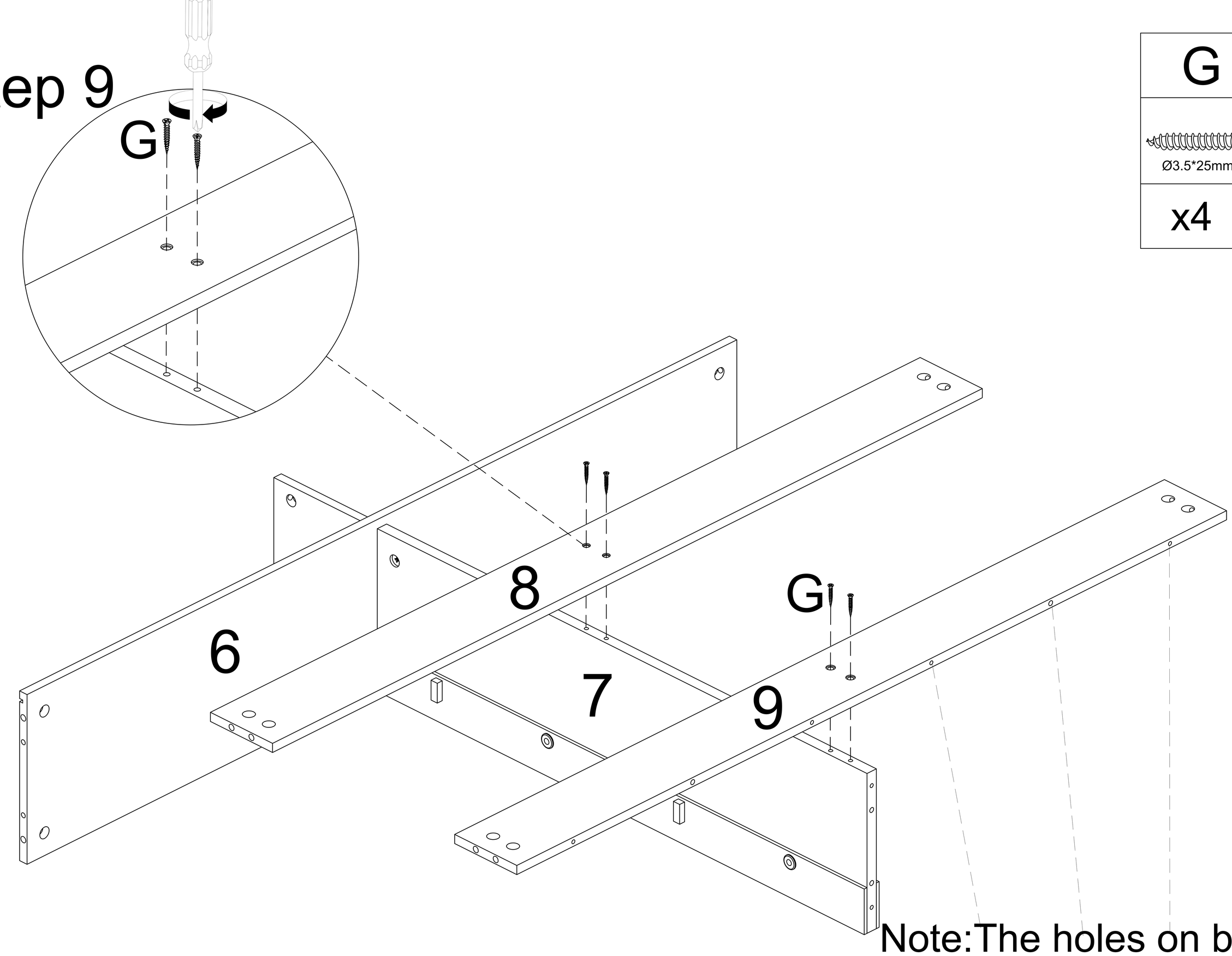

Note:The holes on board #9 should be outwards

Step 10

B	C
	M6*30mm
x12	x4

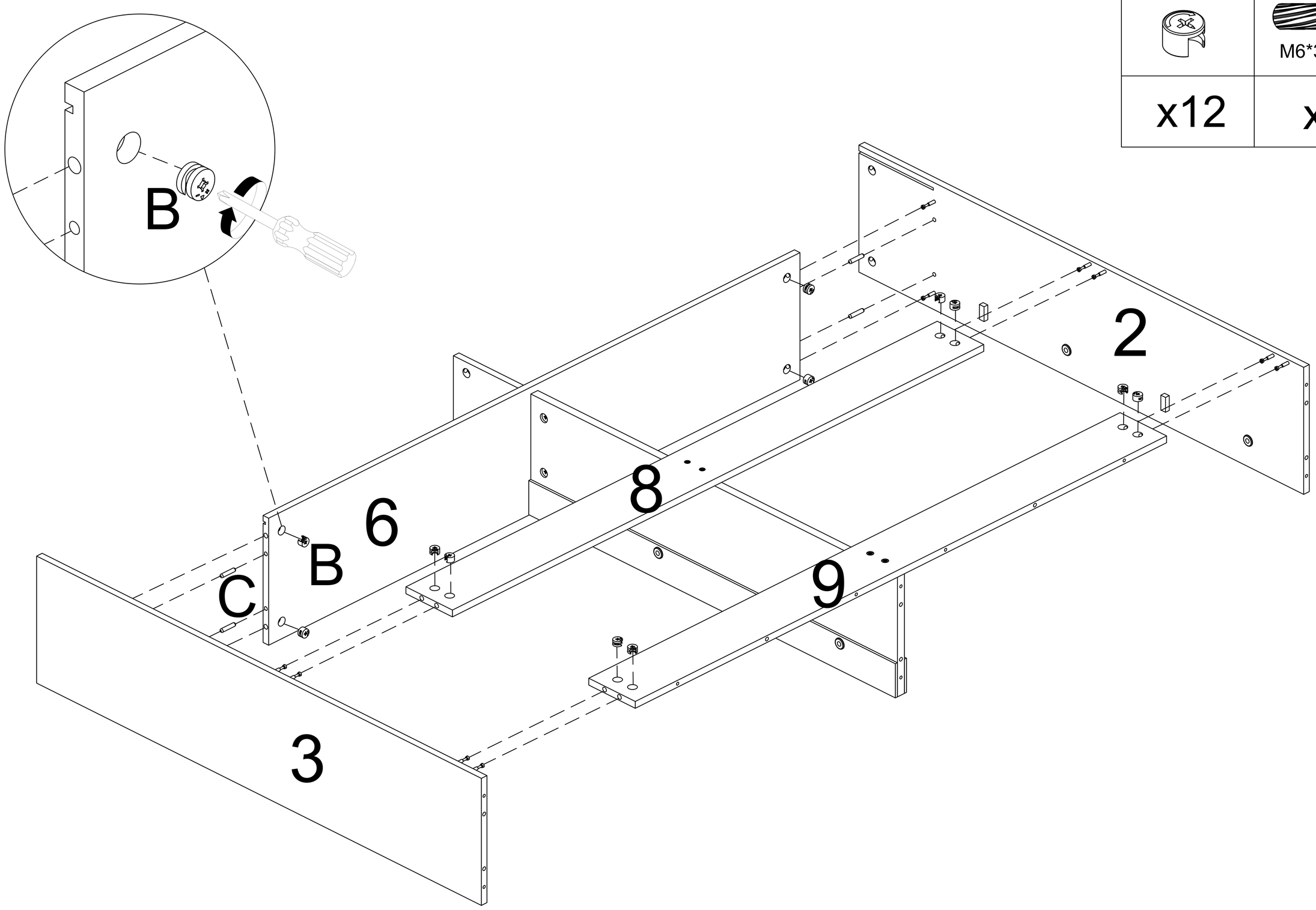

Step 11

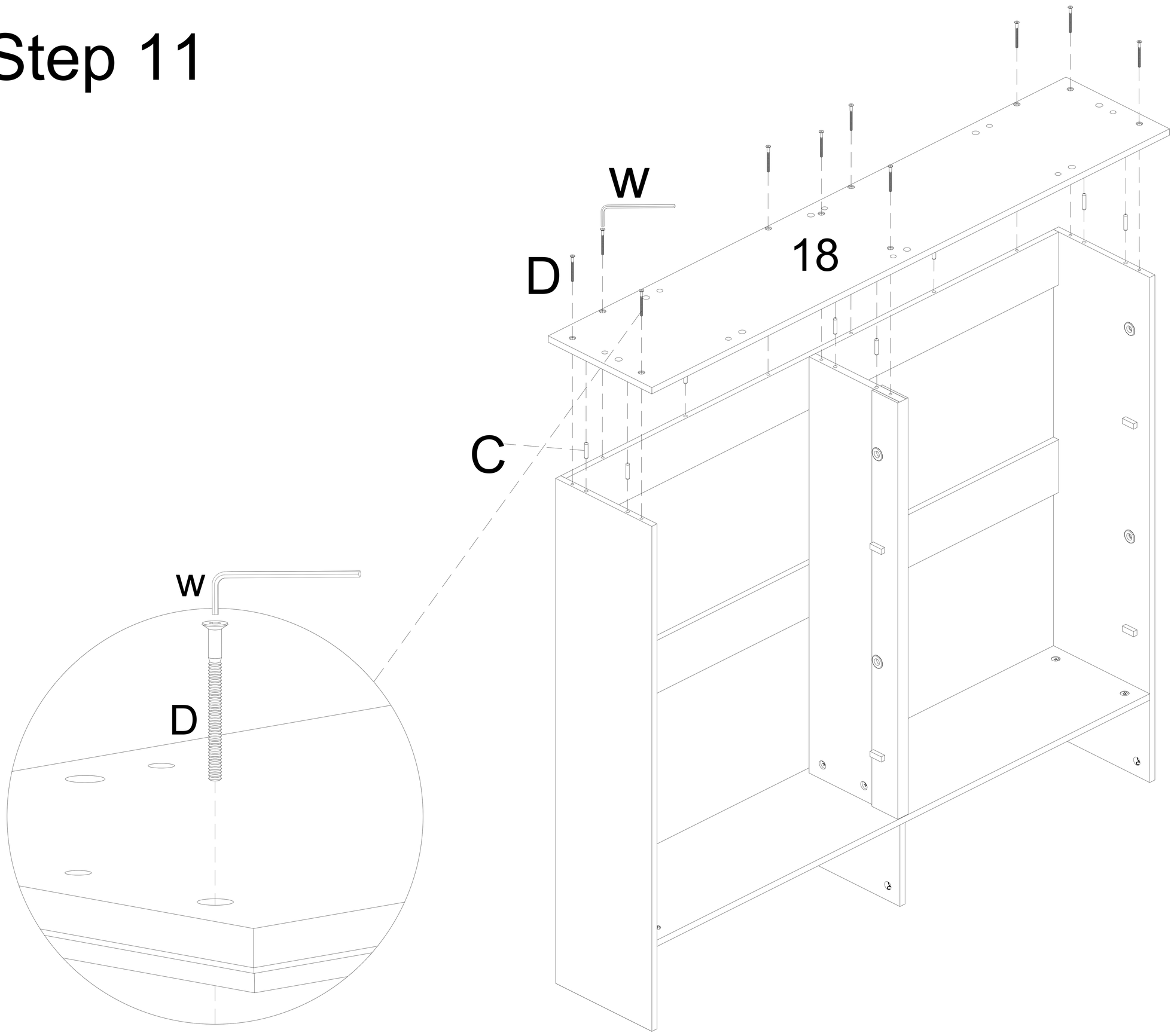

D	C
	M6*30mm
x10	x8
	W
	x1

Step 12

Note:Install part E on the side flush with the plank's short edge

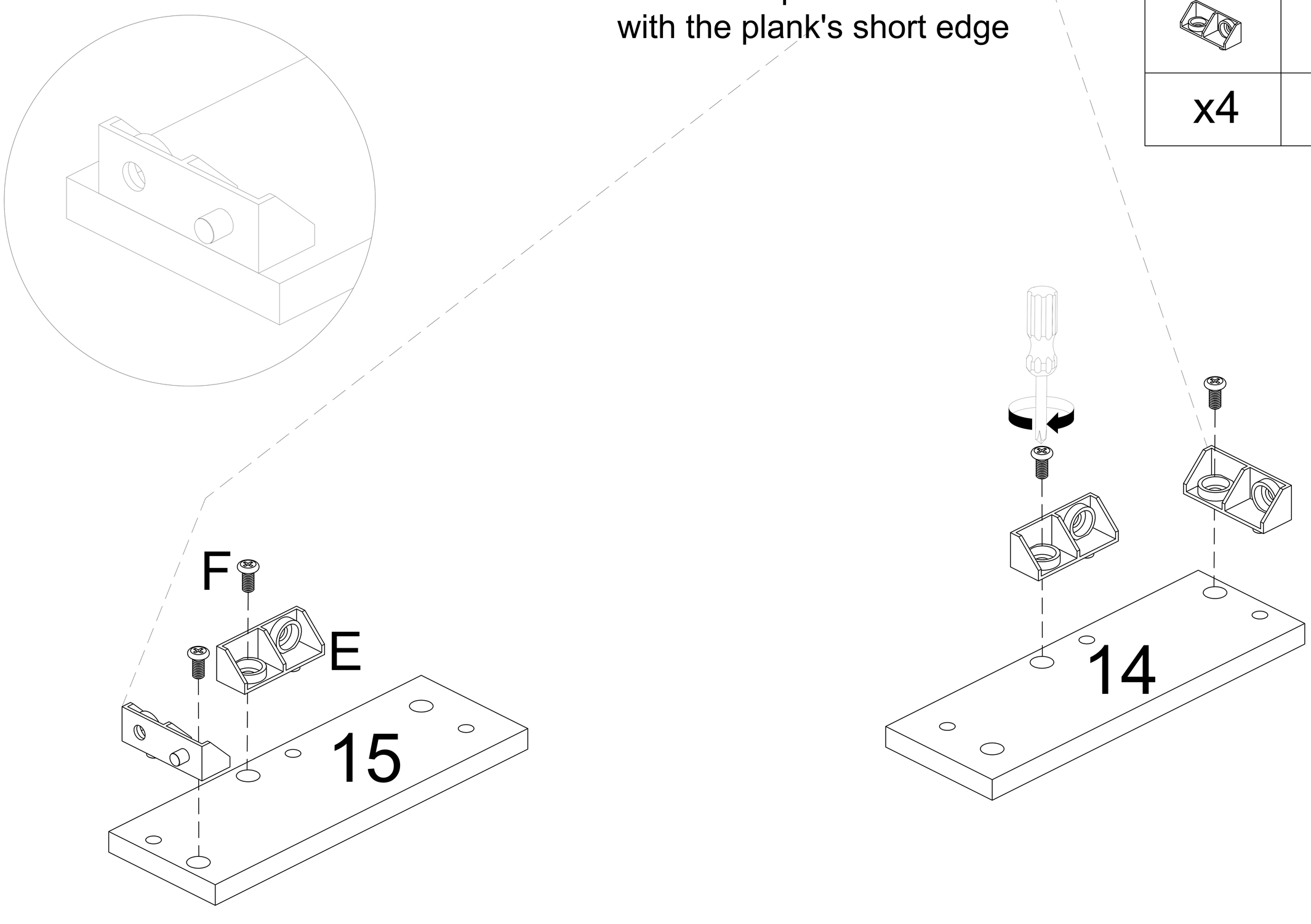

E	F
x4	x4

Step 13

E	F
x8	x8

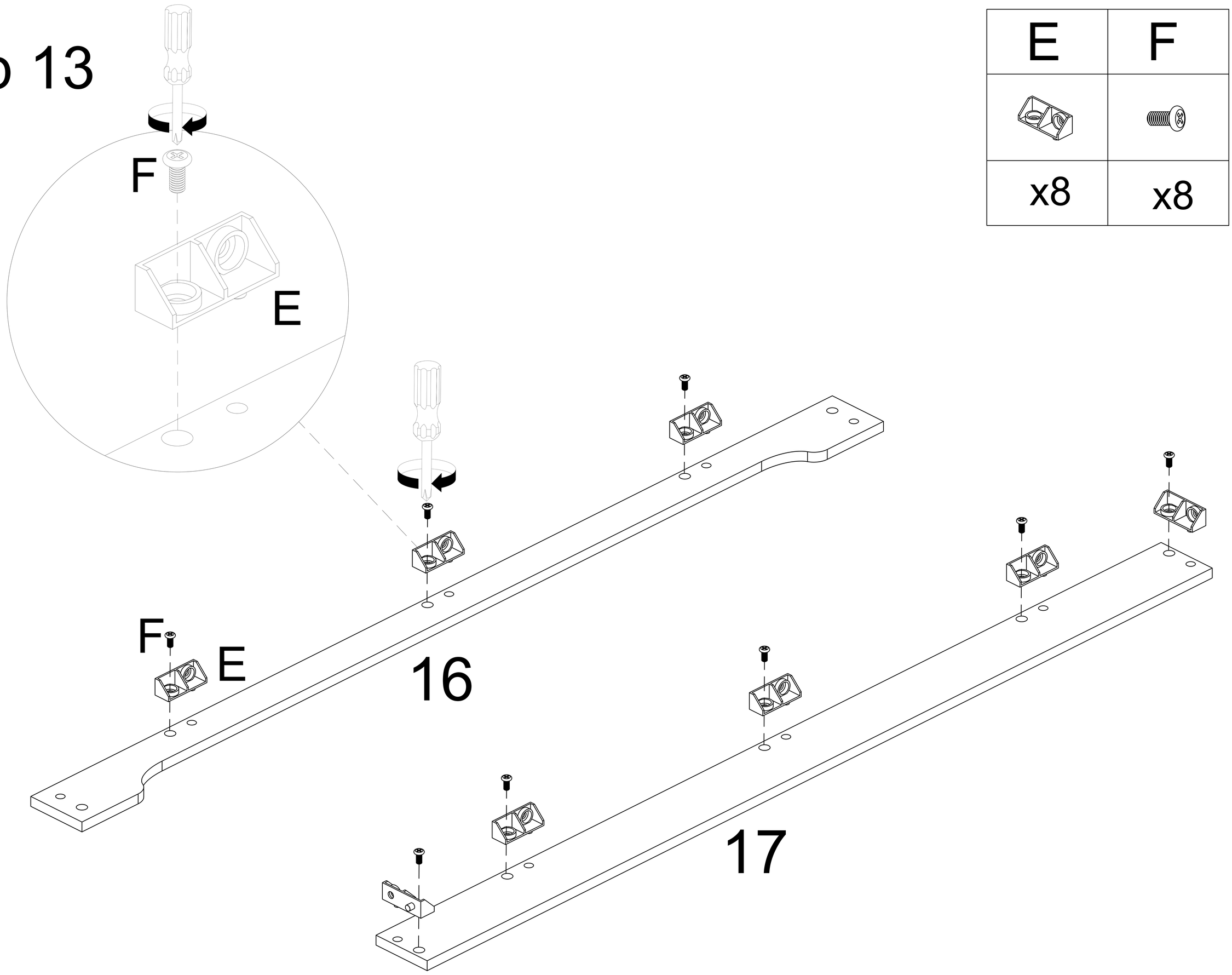

Step 14

F
x2

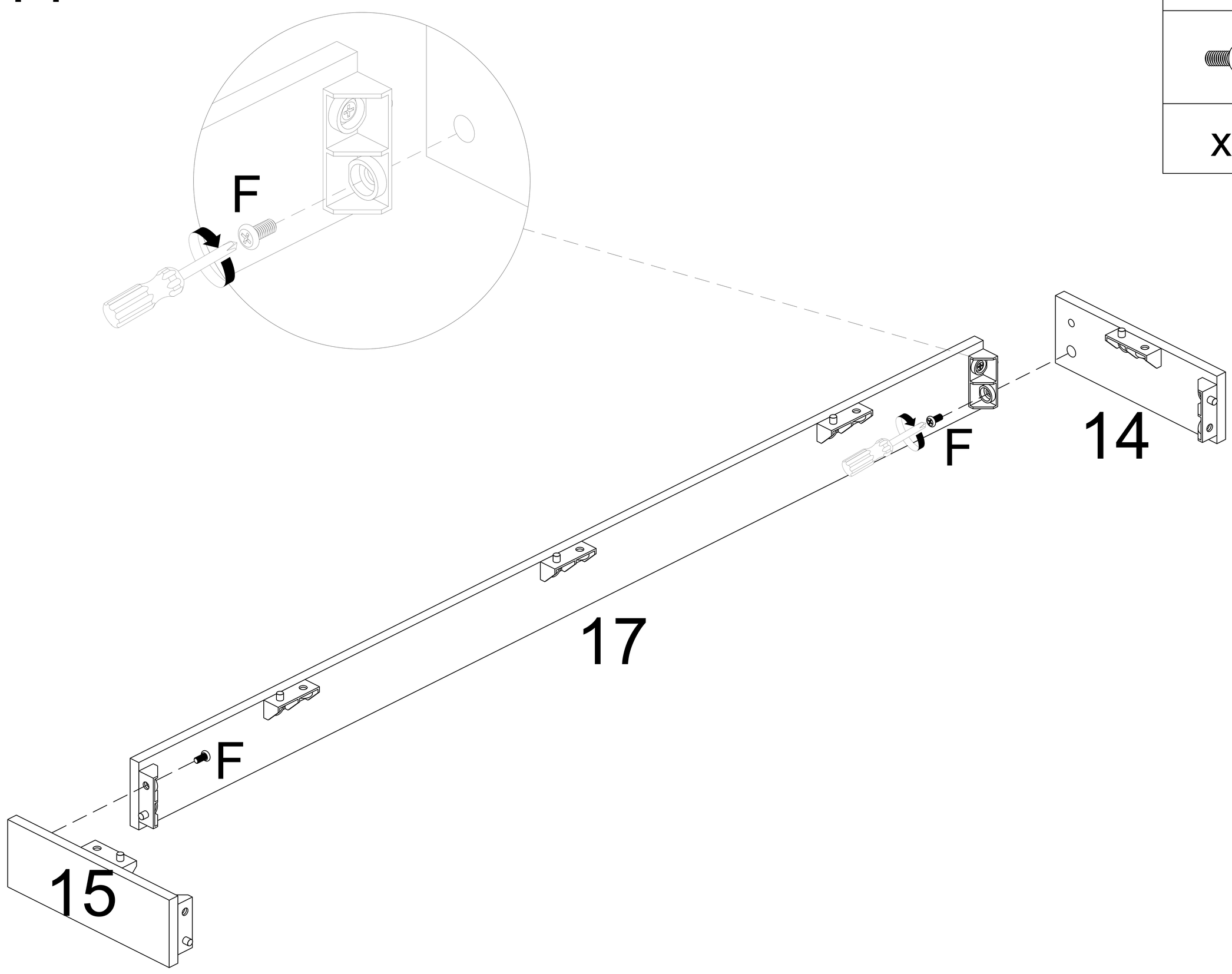

Step 15

F
x2

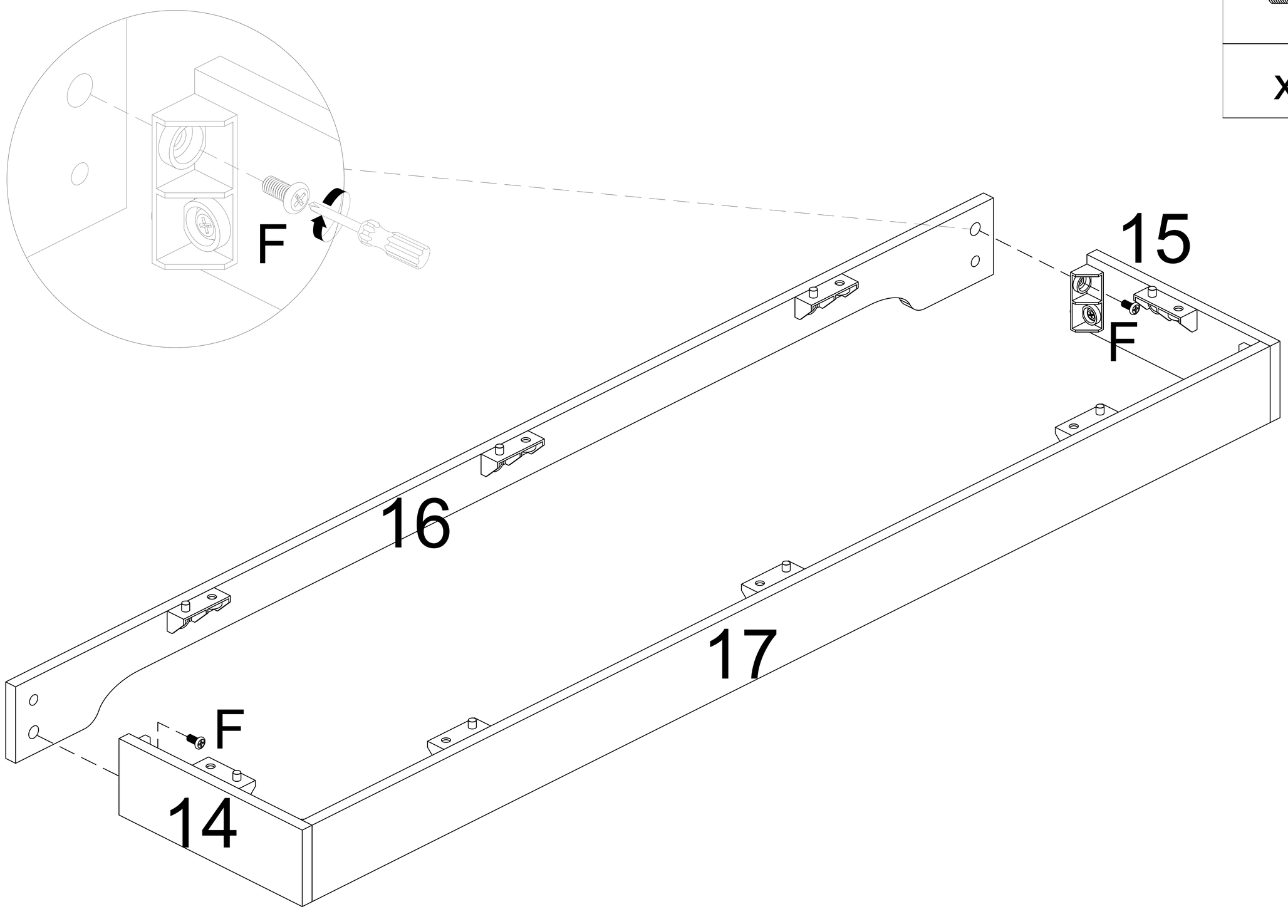

Step 16 Note:The #16 board should be towards you;

F
x8

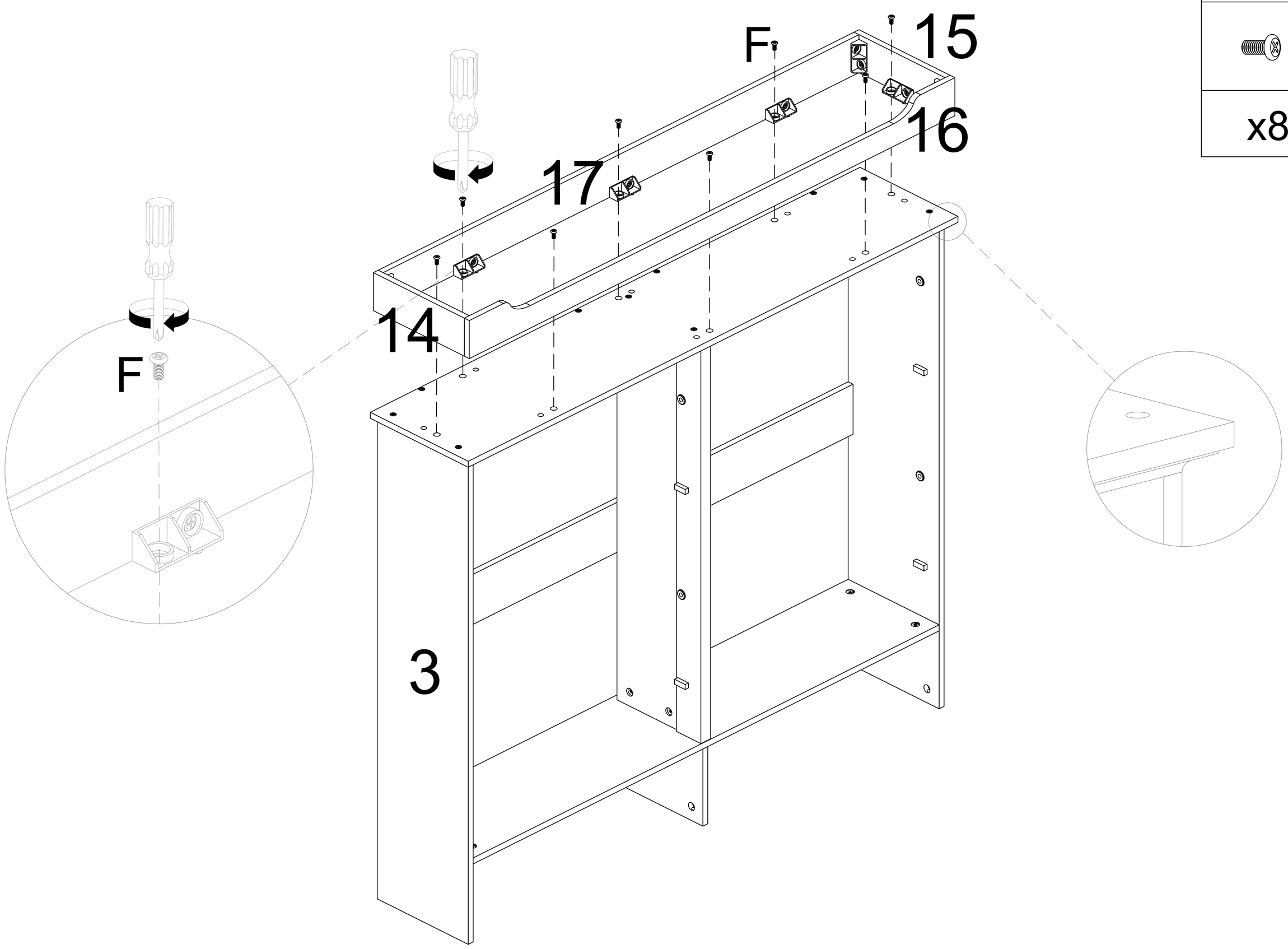

Step 17

The U-shaped hole on the #4 board faces upwards

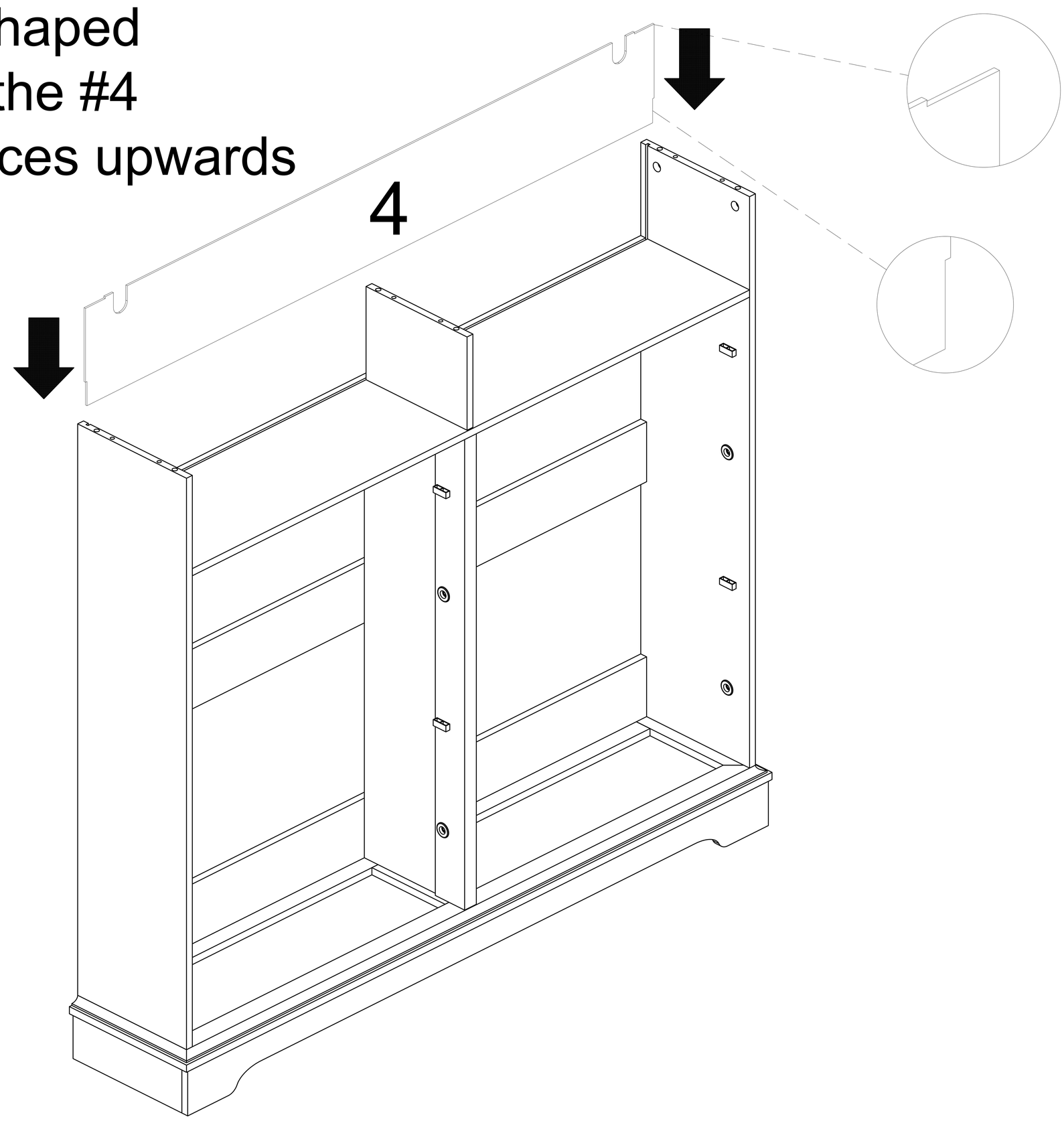

Step 18

B	C
	M6*30mm
x6	x6

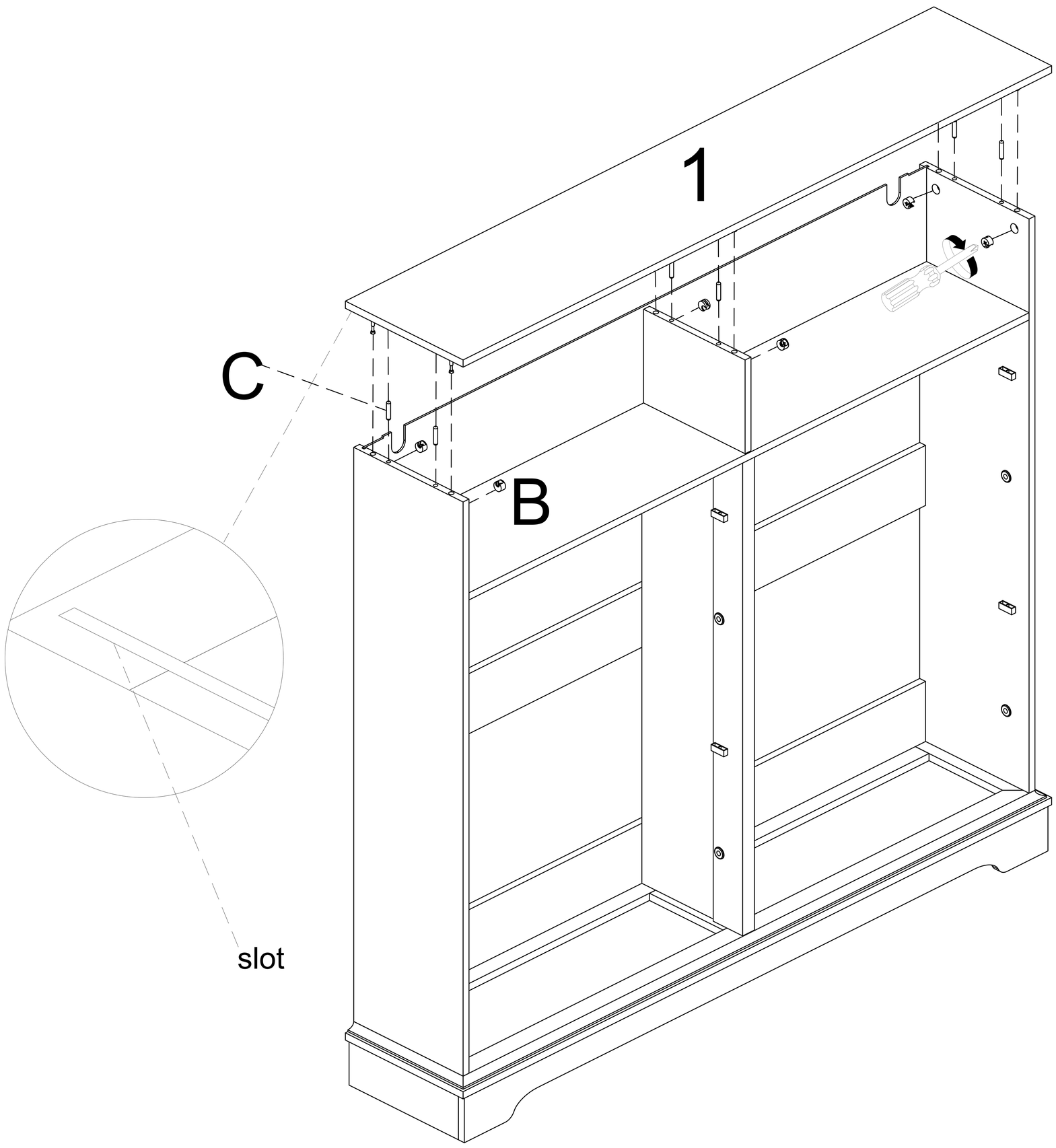

Step 19

U	V
	Ø3*16mm
x8	x8

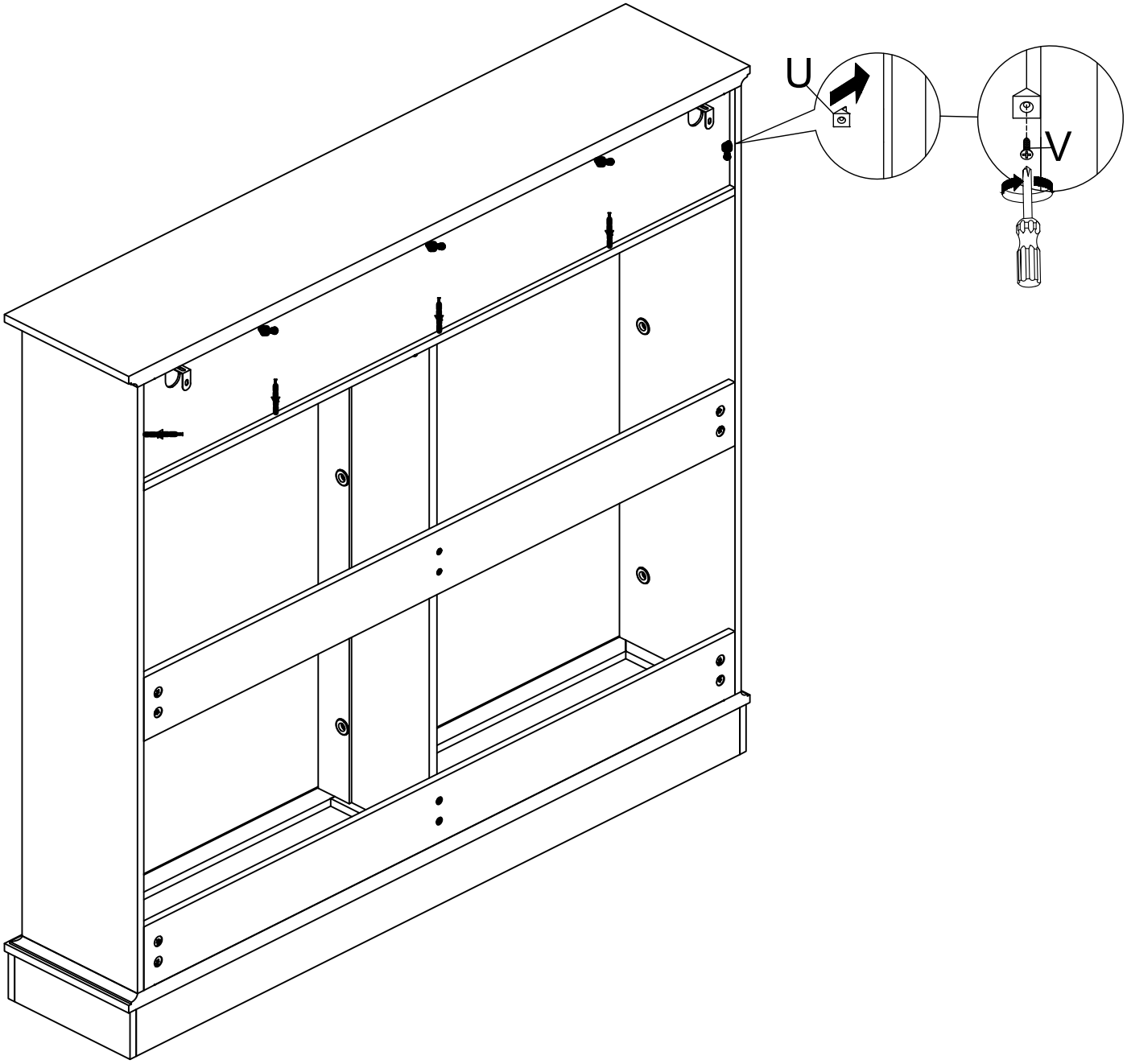

Step 20

Q	S
Ø8*40	Ø5*40
x2	x2

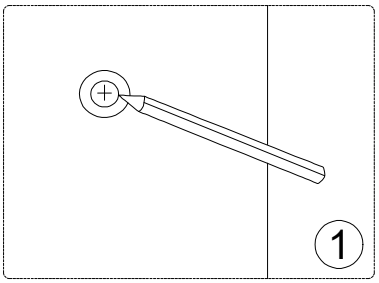

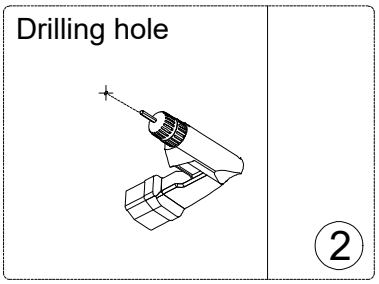

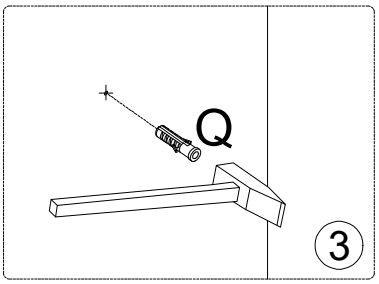

1.Mark the drill position on the wall with pencil.

2.Make 2 holes with a bit at the marked locations.

3.Tap the wall anchor(Q) into the drilled holes with a hammer.

4.Fixed the cabinet to the wall with screws(S)
NOTE: According to the distance between the cabinet and the wall, adjust the #R fitting to the appropriate position, and then tighten all the screws on the #R fitting.

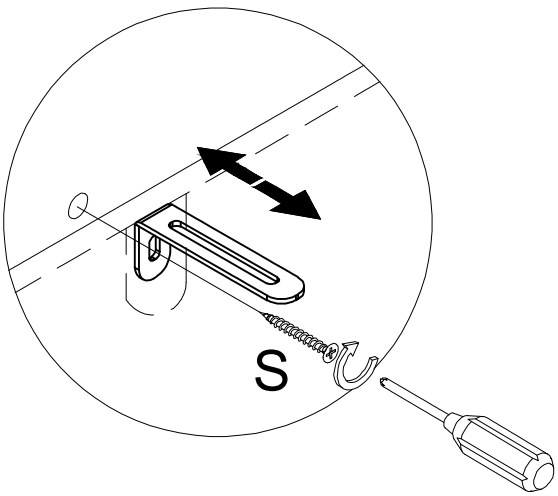

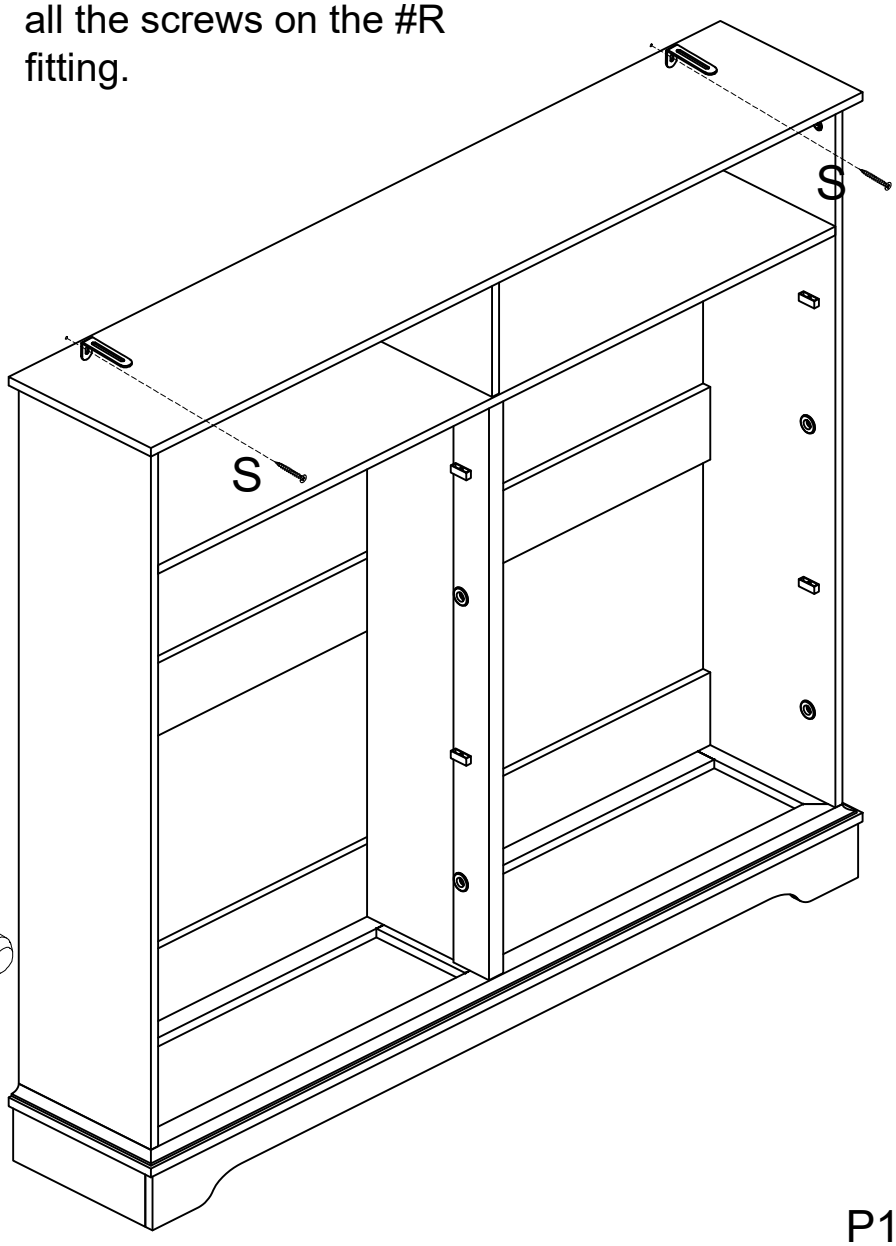

Step 21

Note: Use only #H 15mm screws.
Do not use 25mm #G screws

H	M
Ø3.5*15mm	
x24	x4

N
x4

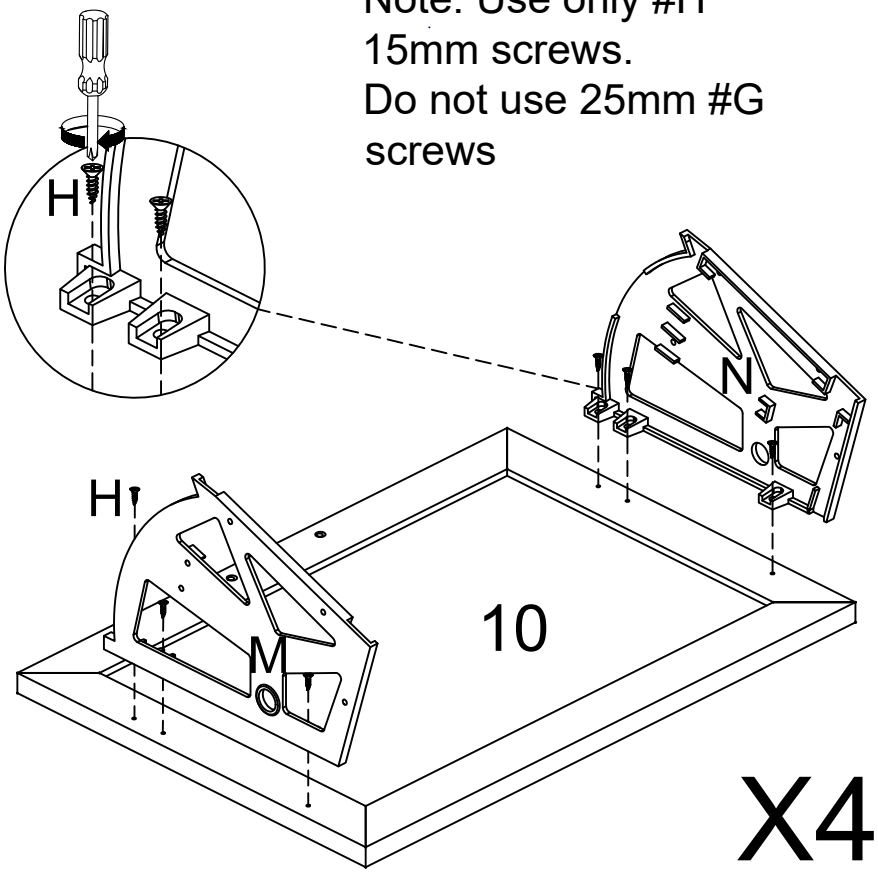

X4

Step 22

G
Ø3.5*25mm
x24

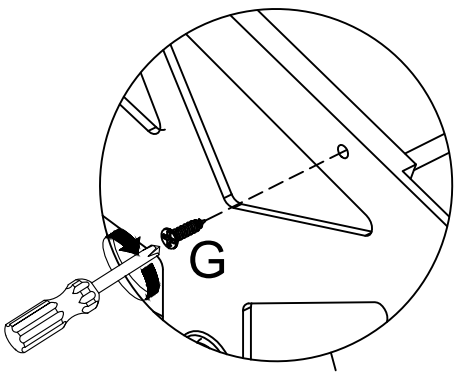

Step 18-1

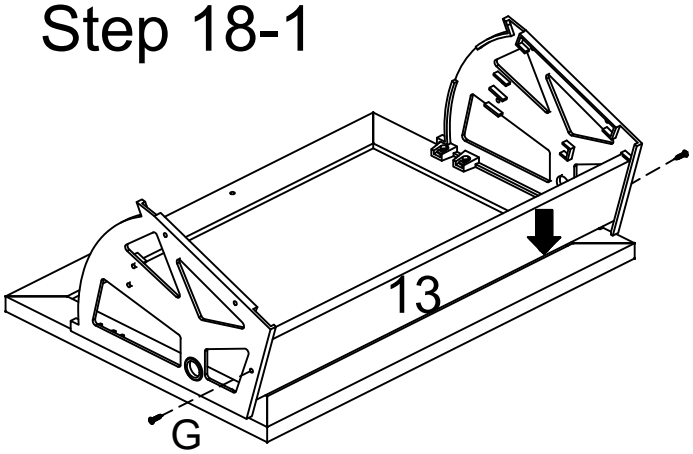

X4

Step 18-2

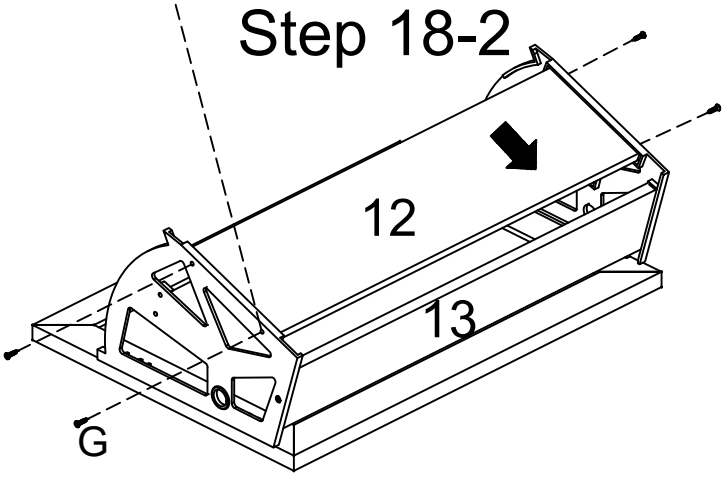

X4

Step 23

I	J
	M4*20mm
x4	x8

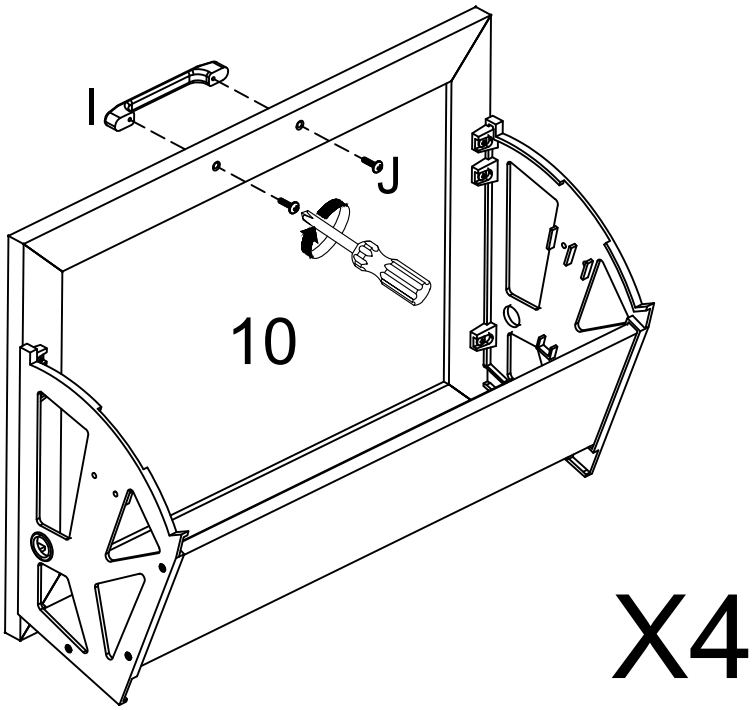

Step 24

K	L
	M4*8mm
x4	x4

NOTE: The door requires 2 people to assemble.

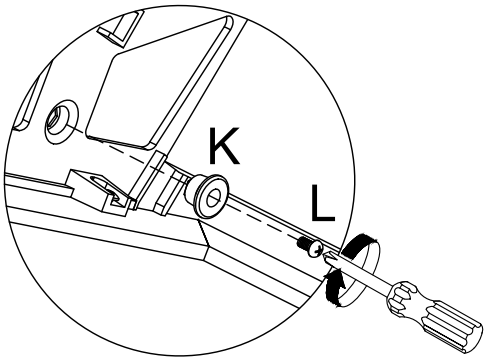

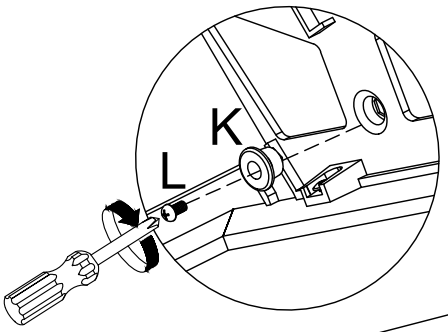

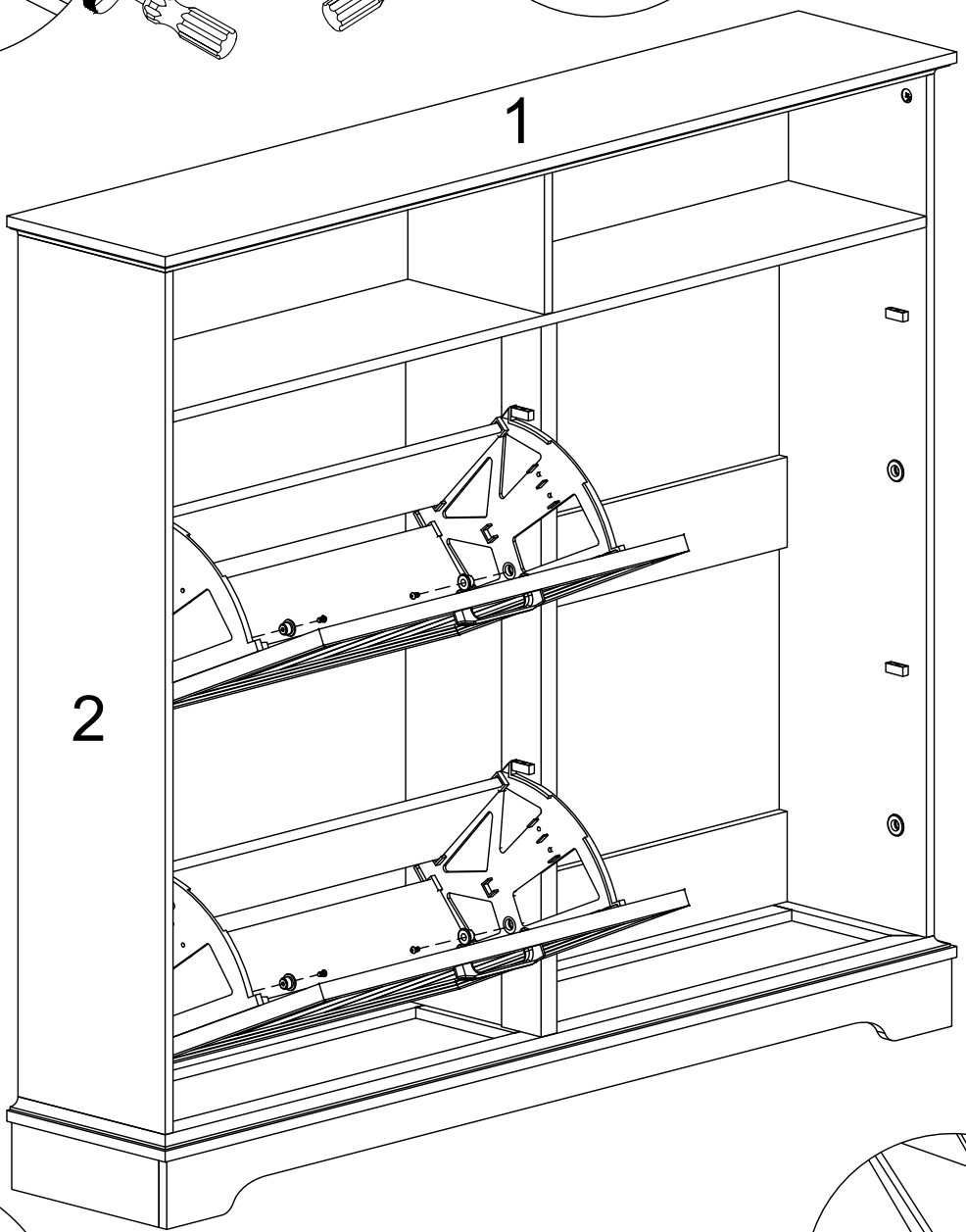

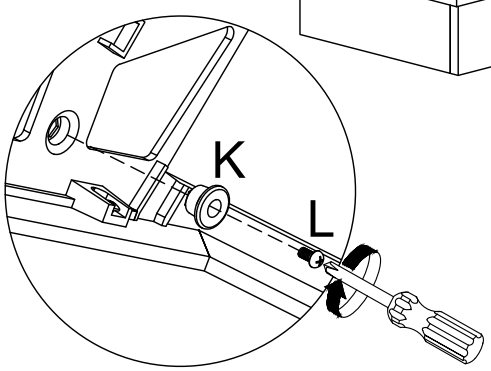

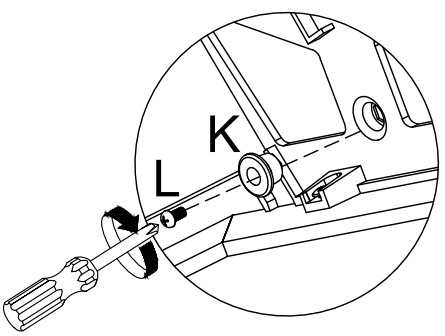

Step 25

K	L
	M4*8mm
x4	x4

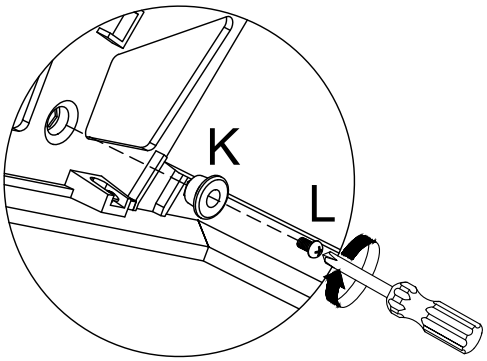

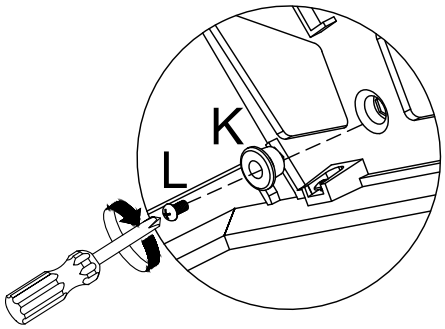

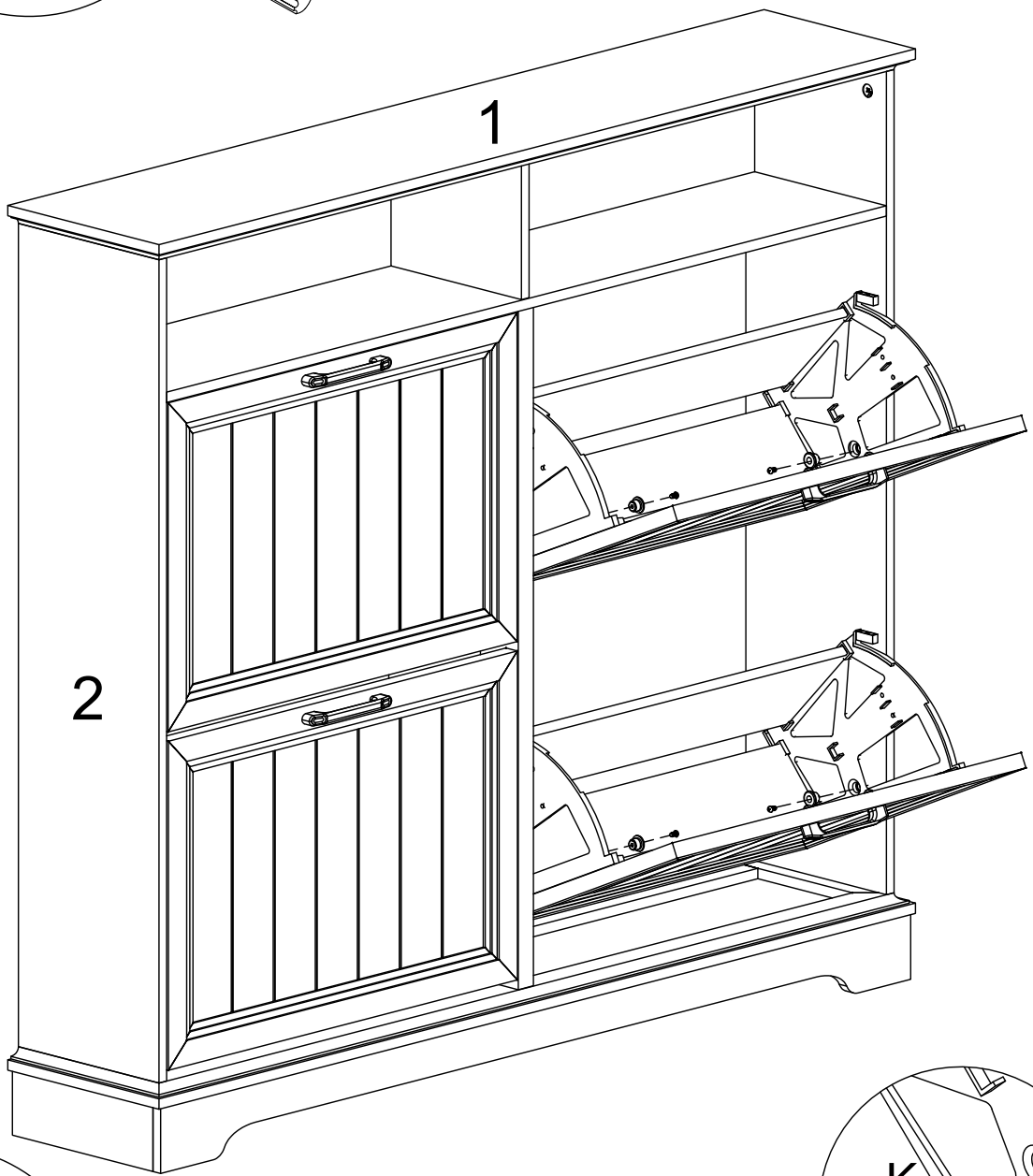

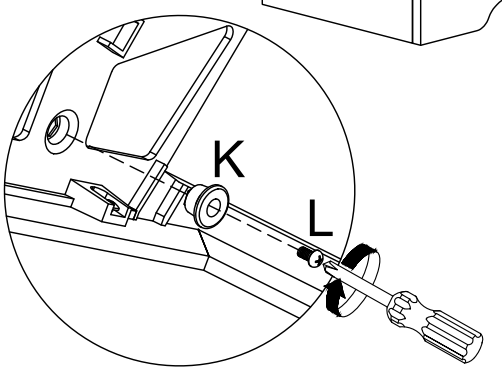

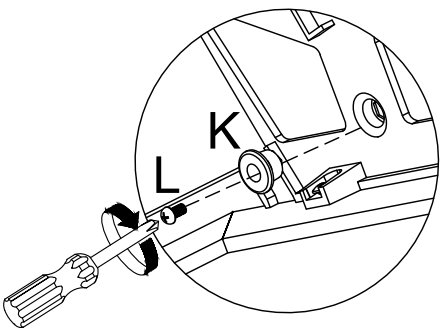

Step 26

Note:Adjustable the #11 shelf for various size of shoes

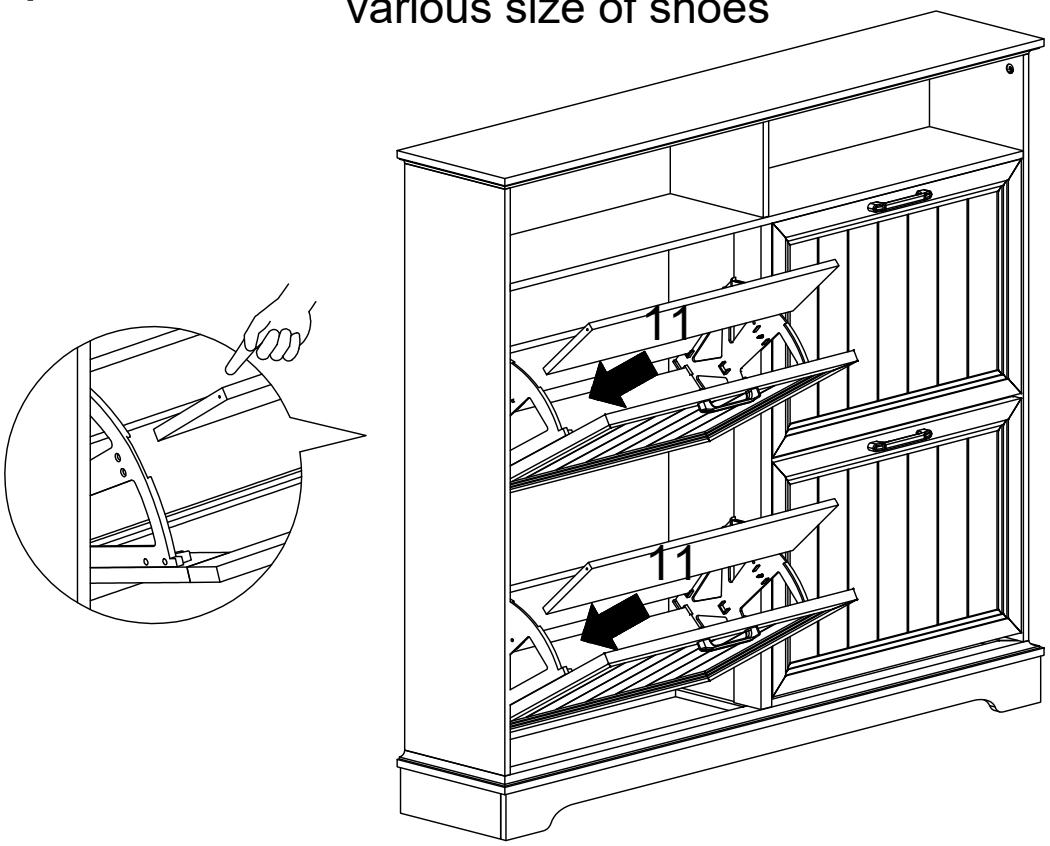

Step 27

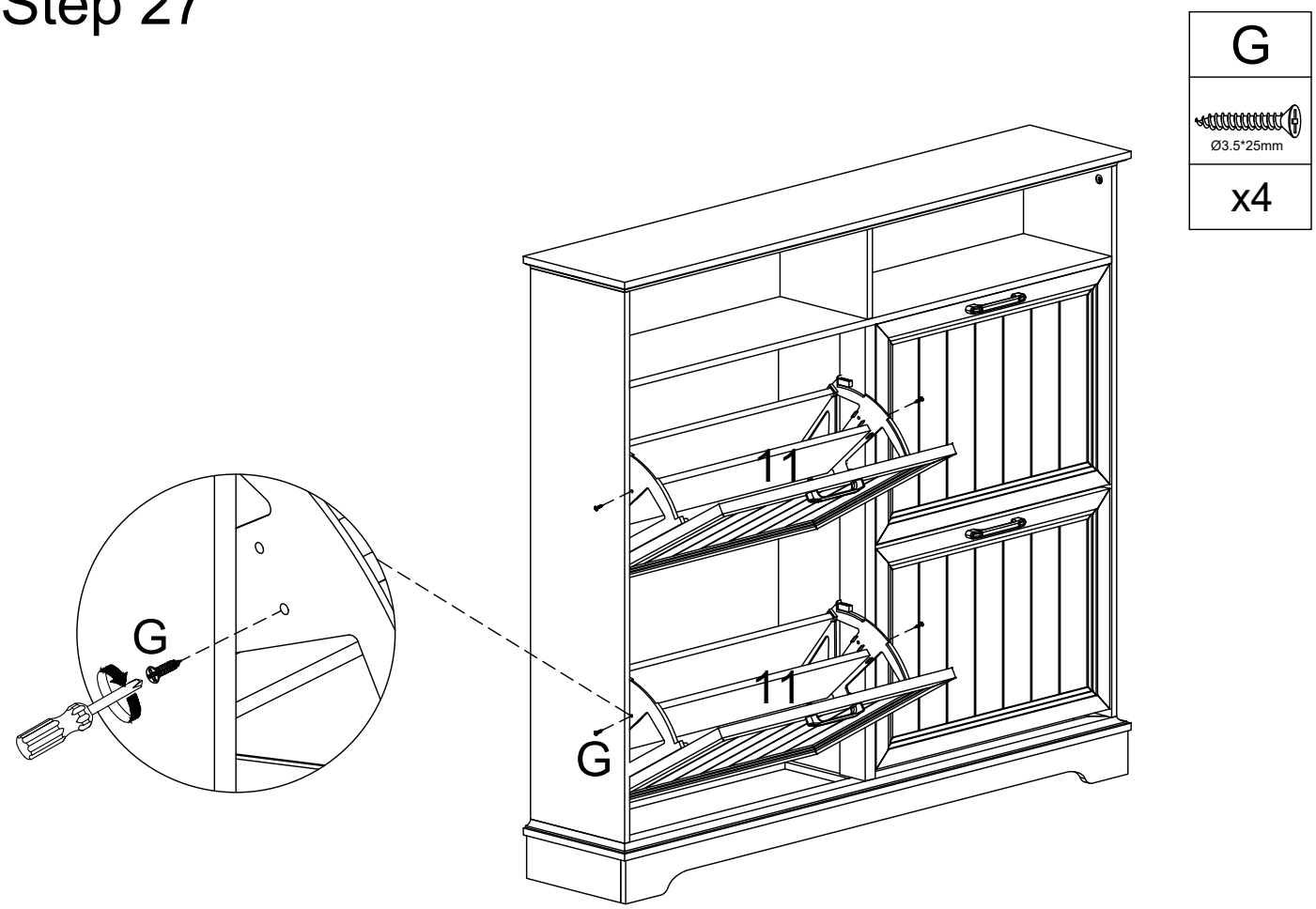

Step 28

Note:Adjustable the #11 shelf for various size of shoes

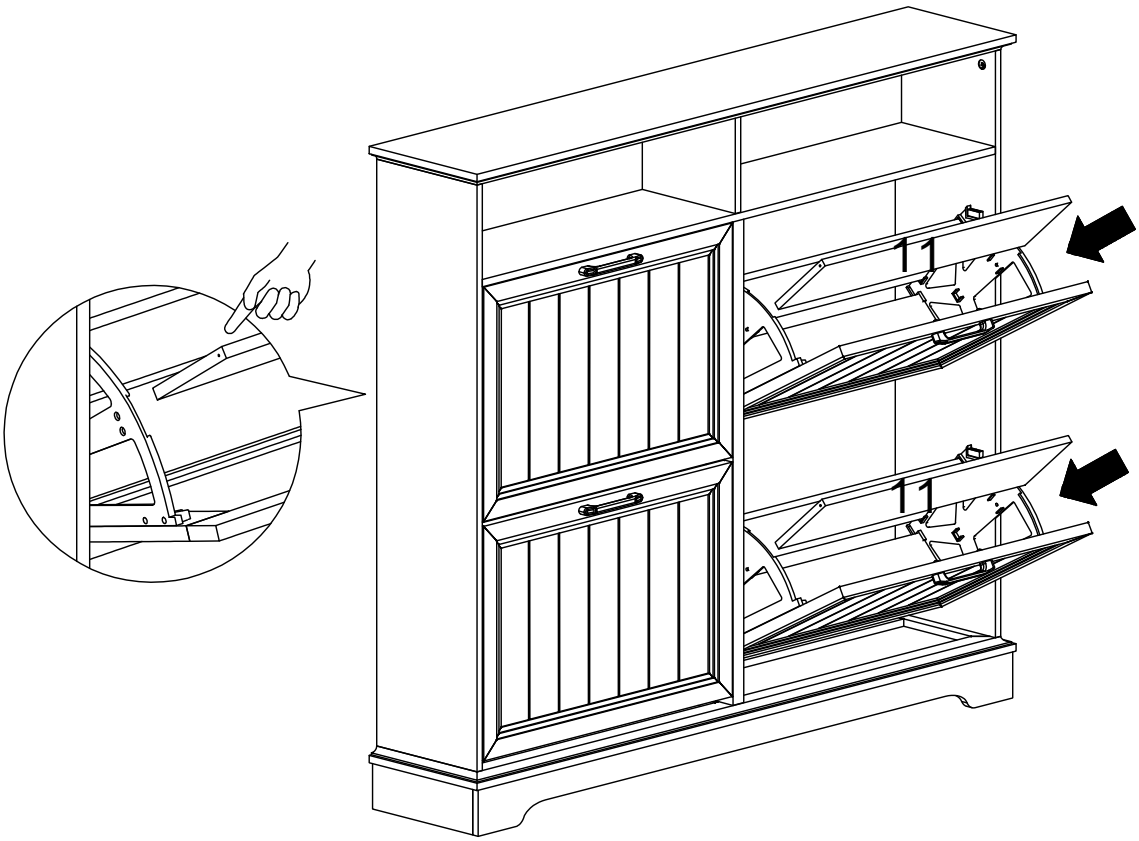

Step 29

G
Ø3.5*25mm
x4

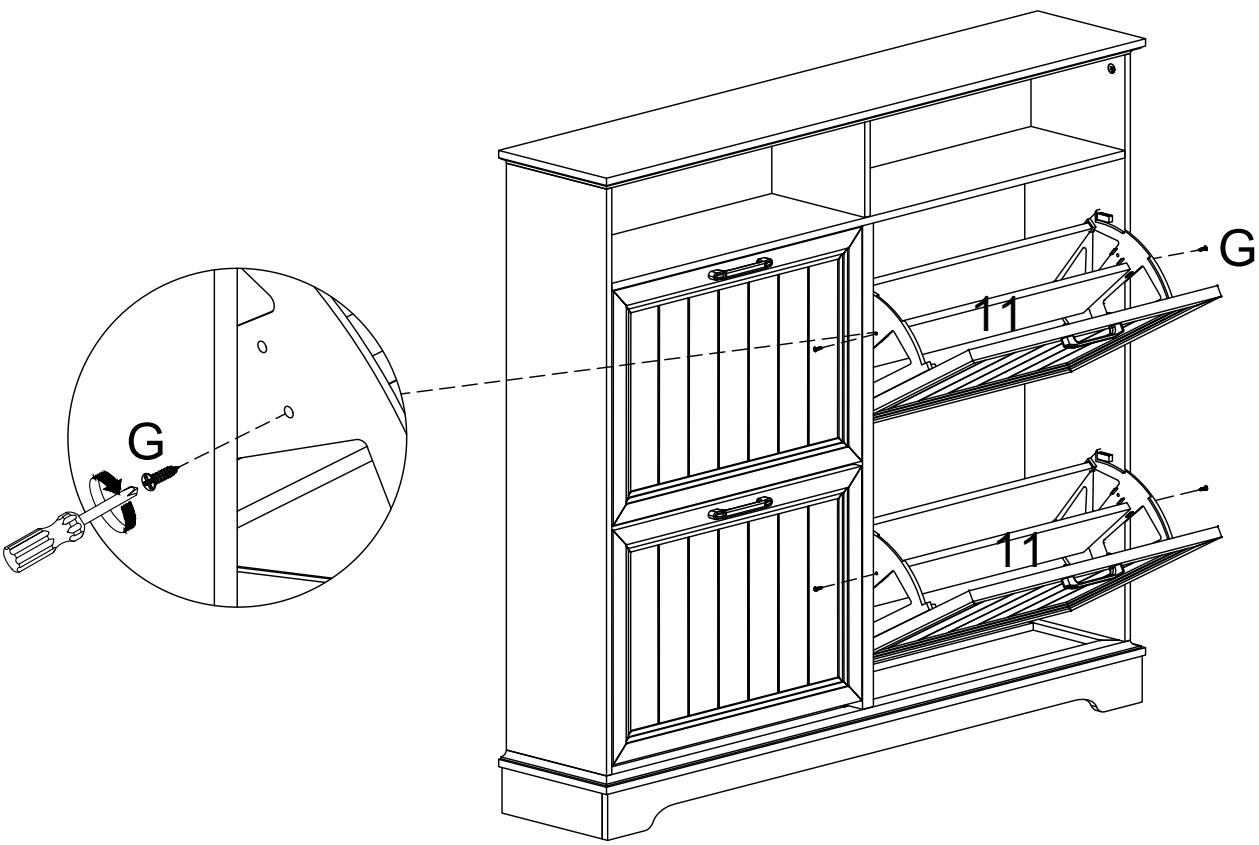

Step 30

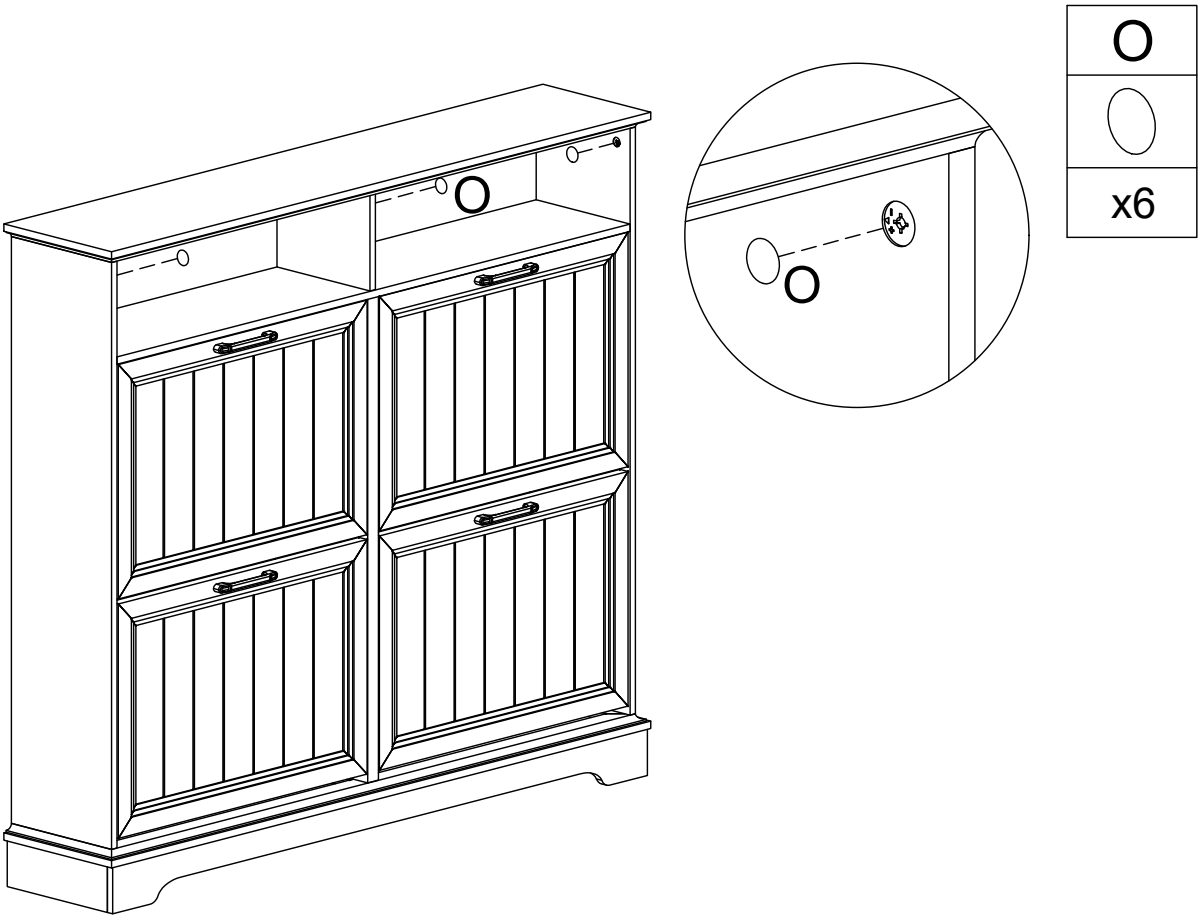

Step 31

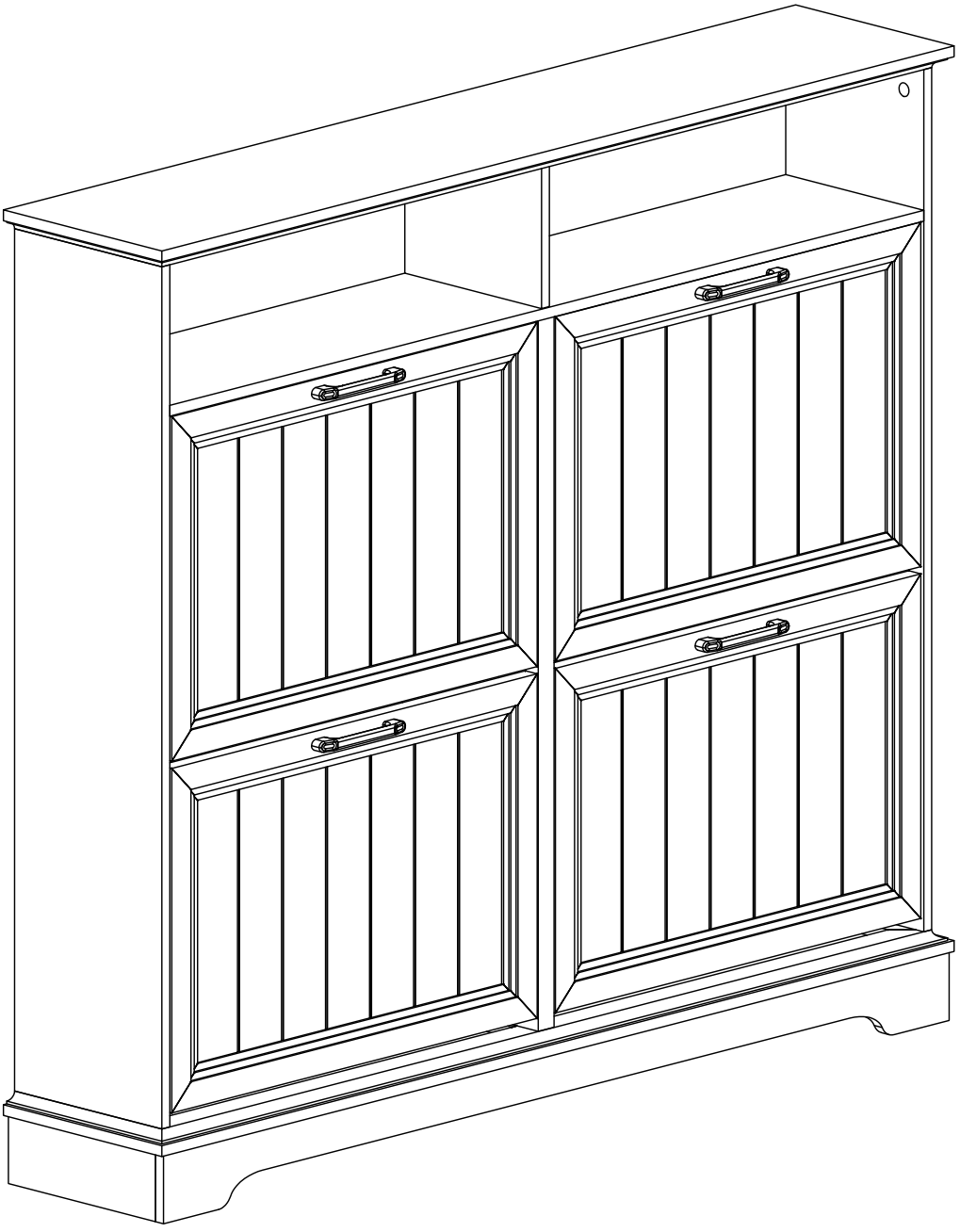

WARNING

Children have died from furniture tipover. To reduce the risk of furniture tipover:

- **ALWAYS install Anti-tip device provided.**
- **NEVER put a TV on this product.**
- **NEVER allow children to stand, climb or hang on drawers, doors, or shelves.**
- **NEVER open more than one drawer at a time.**
- **Place heaviest items in the lowest drawers.**