User Manual

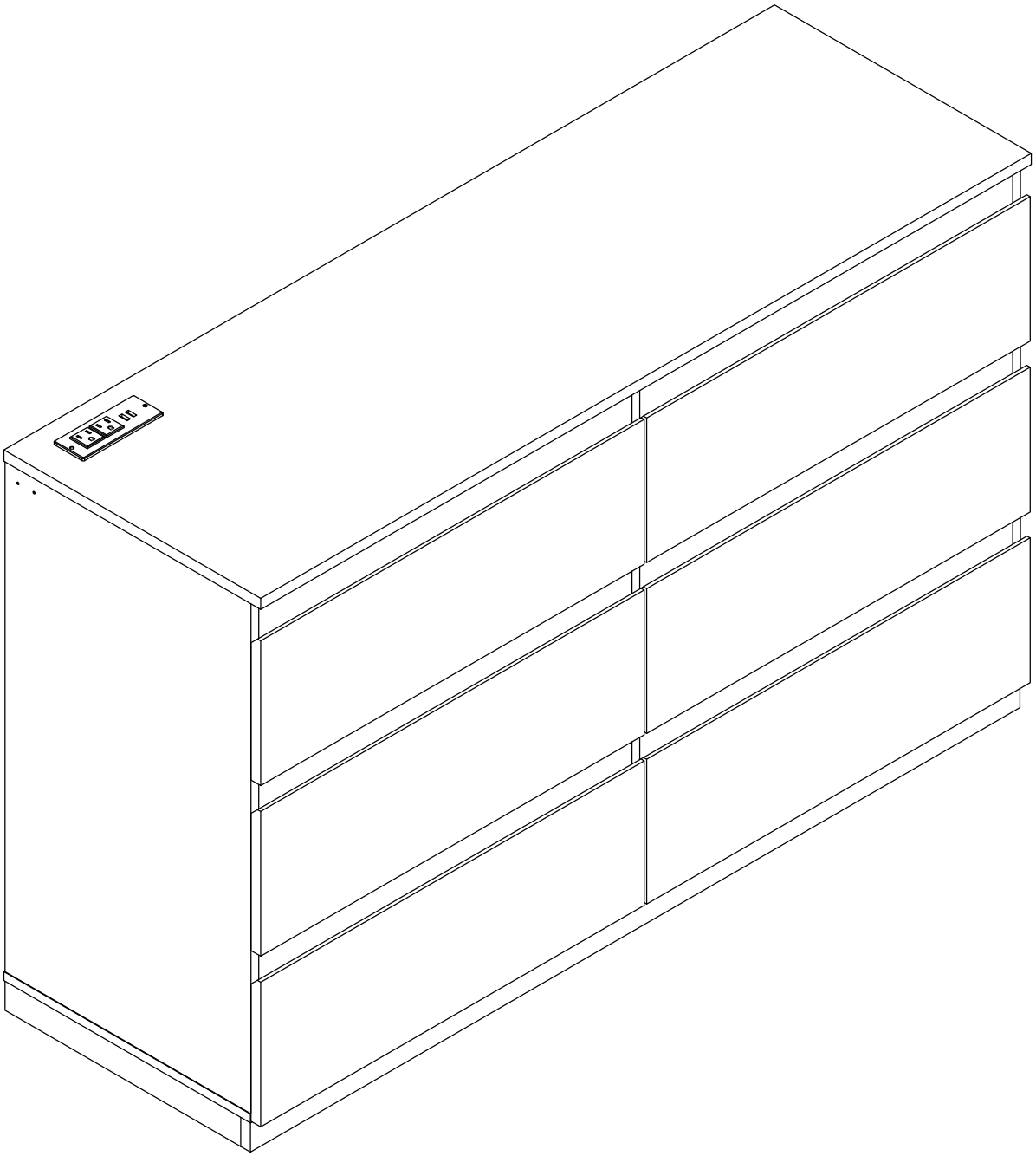

ASSEMBLY INSTRUCTION

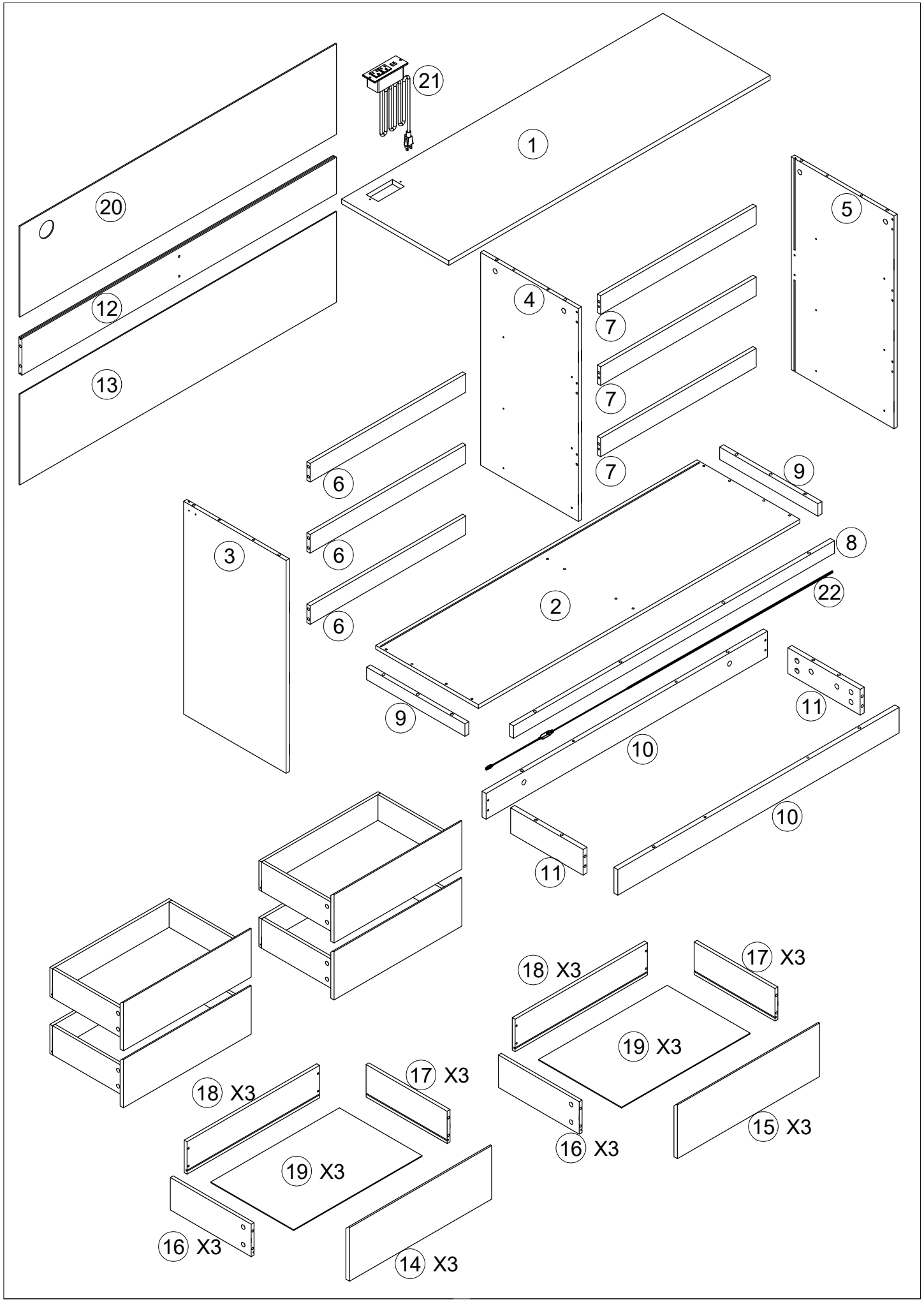

ASSEMBLY INSTRUCTION

1 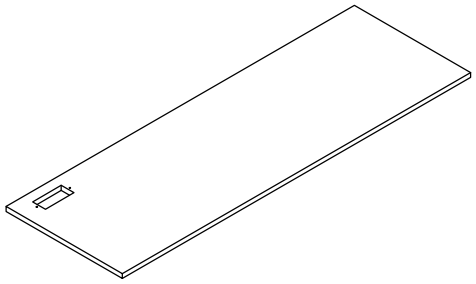 X1	2 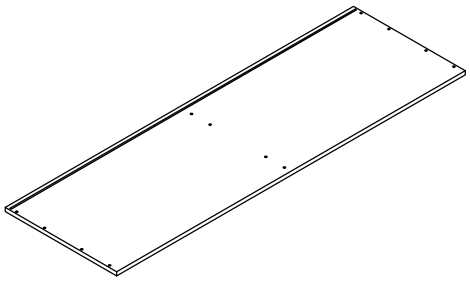 X1	3 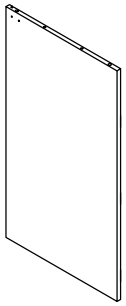 X1
4 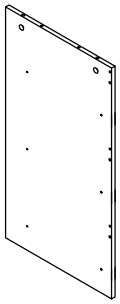 X1	5 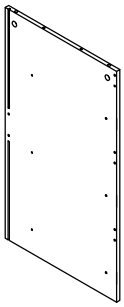 X1	6 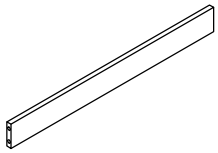 X3
7 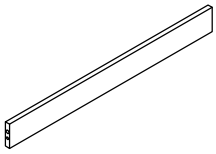 X3	8 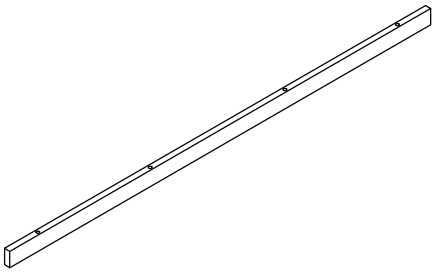 X1	9 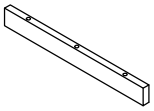 X2
10 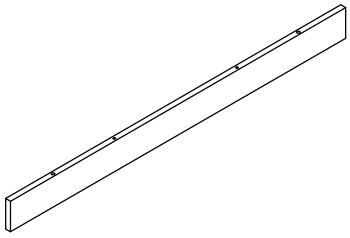 X2	11 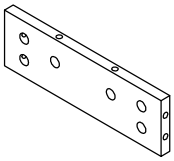 X2	12 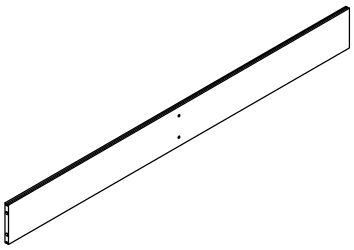 X1
13 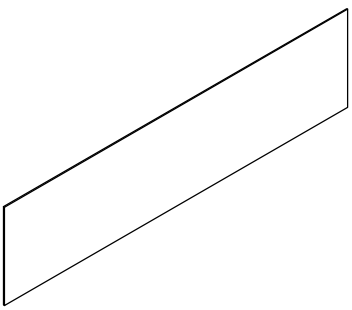 X1	14 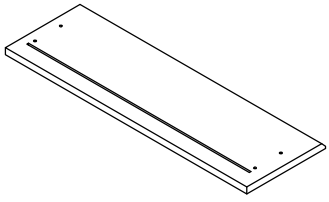 X3	15 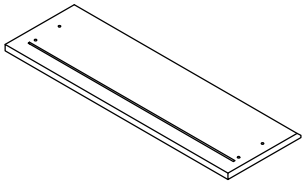 X3

ASSEMBLY INSTRUCTION

16 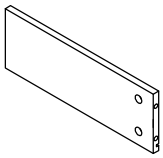 X6	17 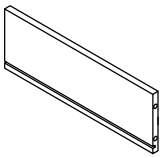 X6	18 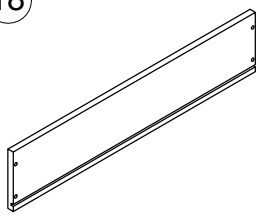 X6	19 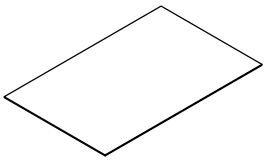 X6
20 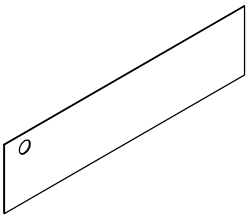 X1	21 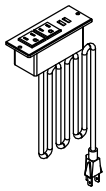 X1	22 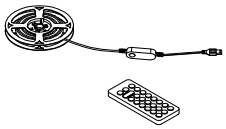 X1	

PART LIST

A	B	C	D
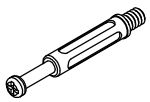 ST6*40mm	 9.5	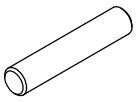 Ø6*30mm	 ST5*40mm
70+5PCS	70+5PCS	22+2PCS	32+3PCS

E	F	G	H
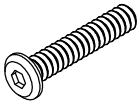 M6*45mm	 ST3.5*14mm		
10+1PCS	14+1PCS	8PCS	7PCS

L	M	N	14″
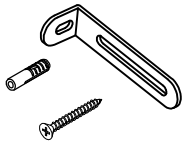		 ST3.5*12mm	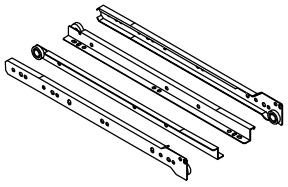
2PCS	6PCS	48+5PCS	6PCS

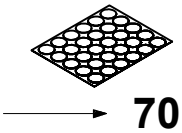 70	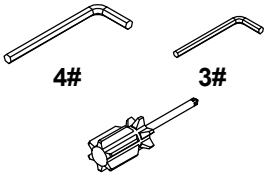		
1PC	1PC		

ASSEMBLY INSTRUCTION

STEP 1

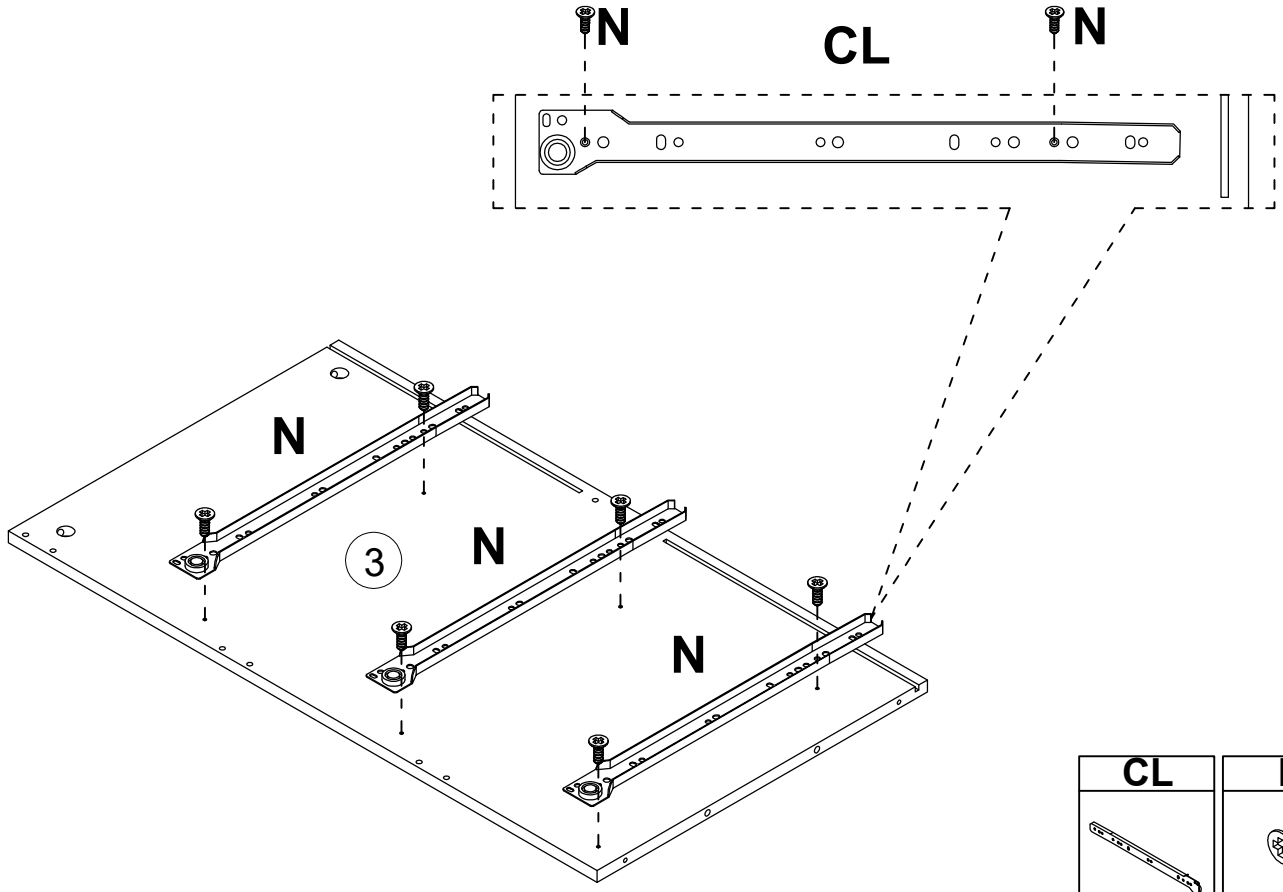

CL	N
	 ST3.5*12mm
3PCS	6PCS

STEP 2

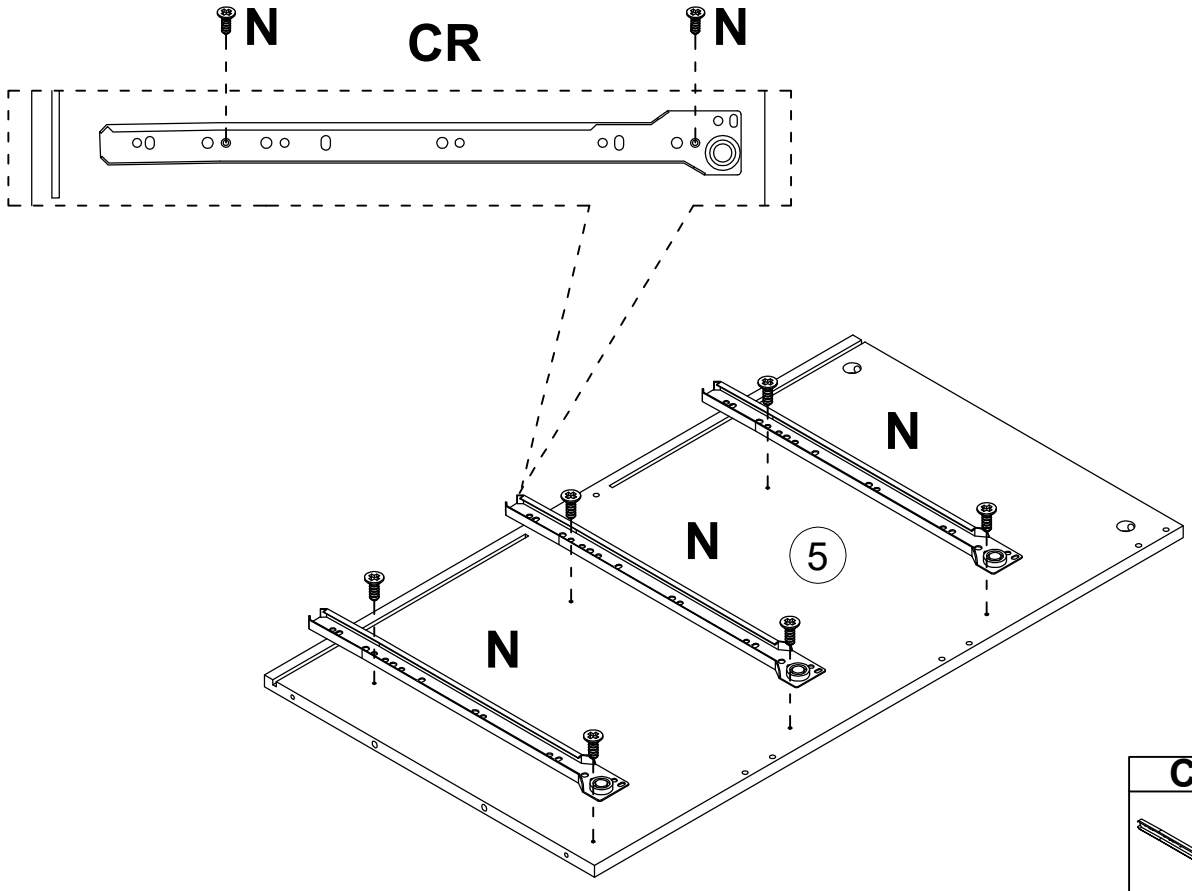

CR	N
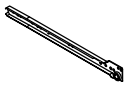	 ST3.5*12mm
3PCS	6PCS

ASSEMBLY INSTRUCTION

STEP 3

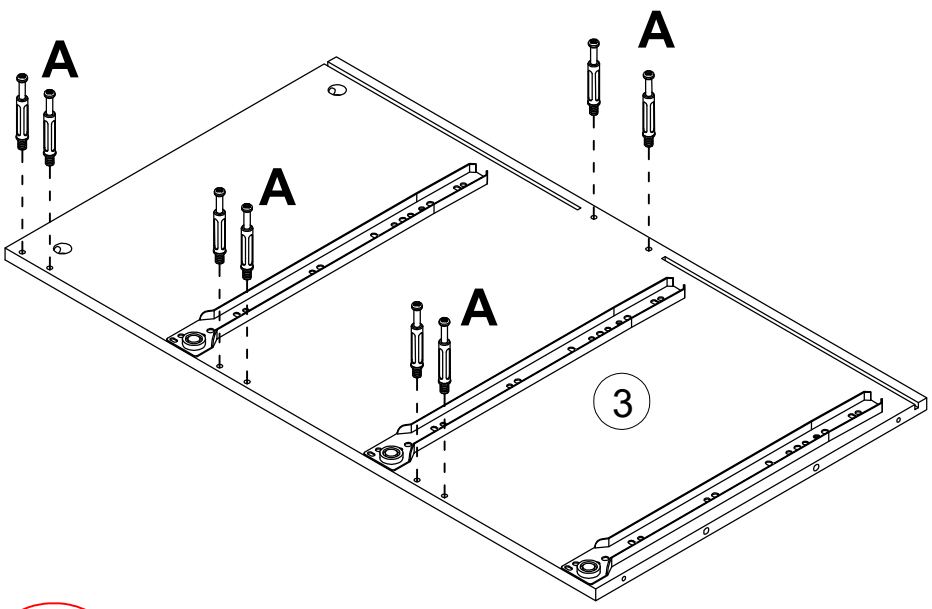

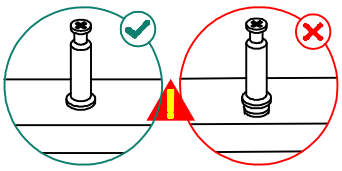

A

ST6*40mm
8PCS

STEP 4

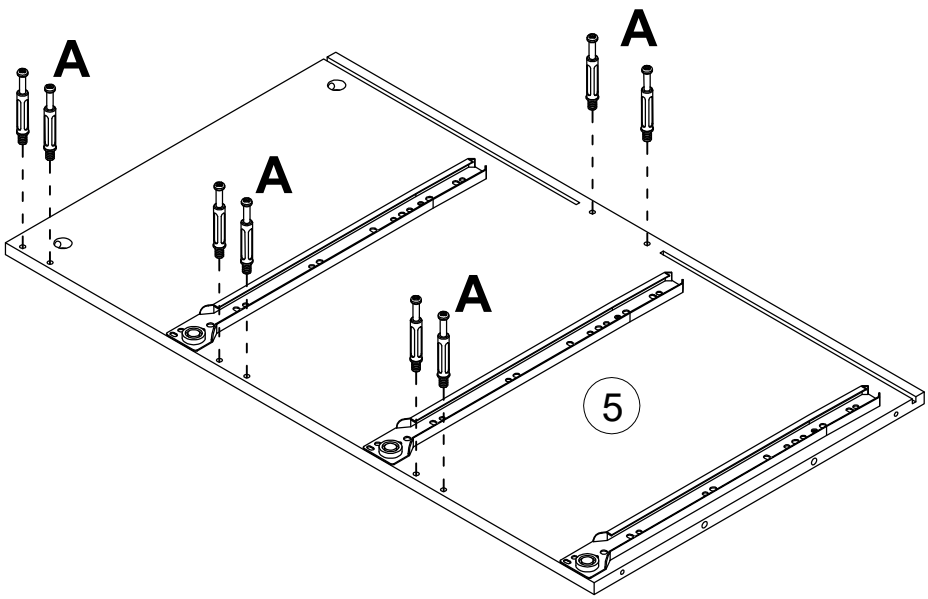

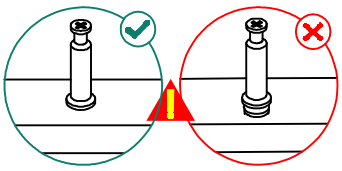

A

ST6*40mm
8PCS

ASSEMBLY INSTRUCTION

STEP 5

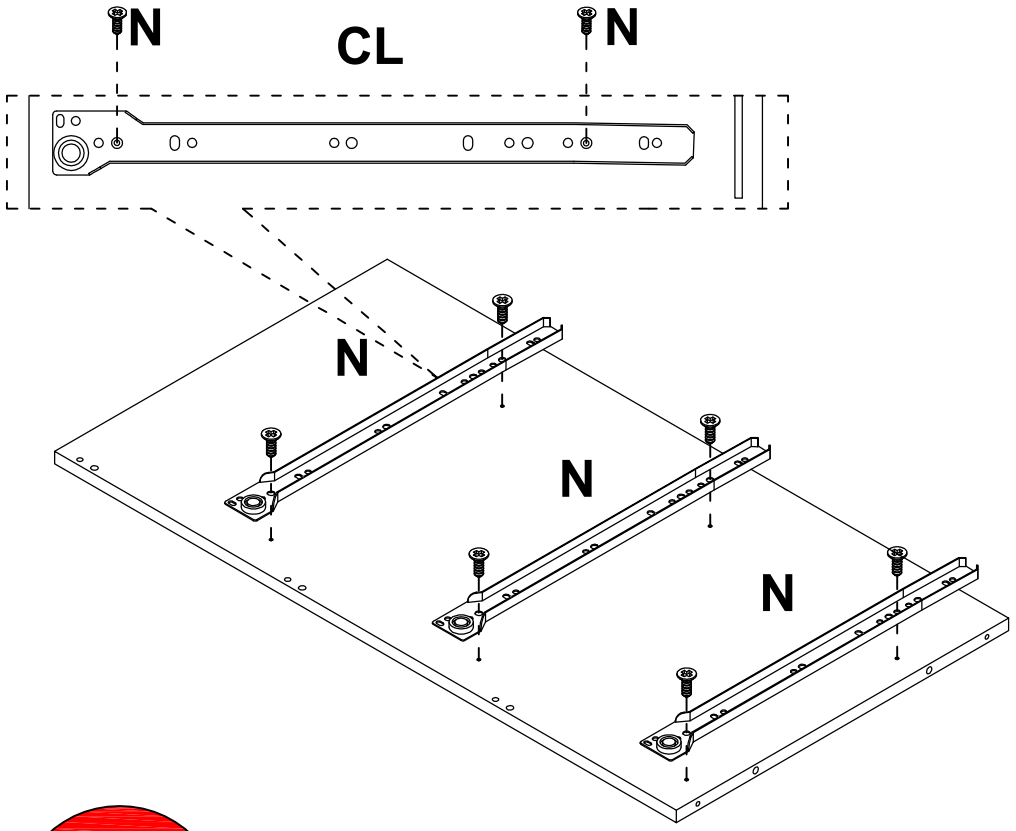

Note that when installing this step, you need to install the A screw from the opposite side.

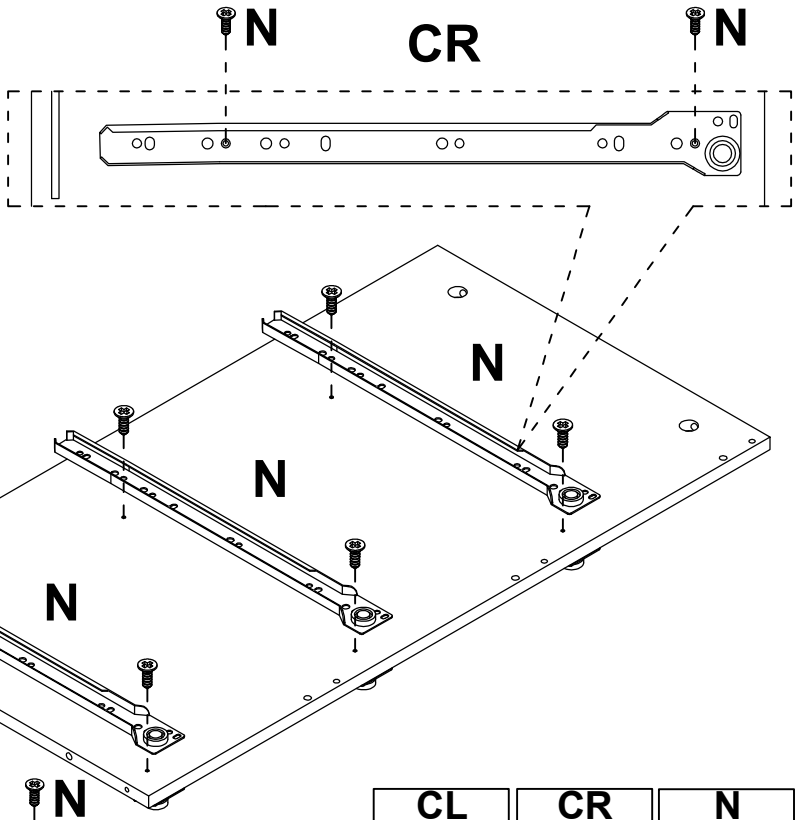

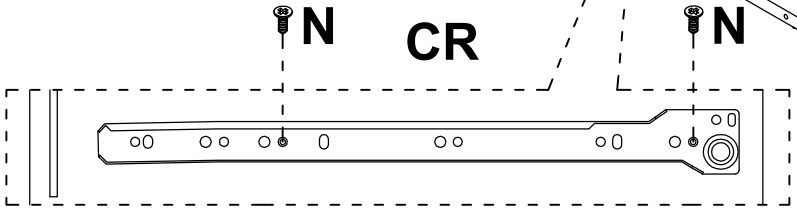

CL	CR	N
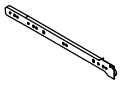	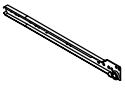	 ST3.5*12mm
3PCS	3PCS	12PCS

ASSEMBLY INSTRUCTION

STEP 6

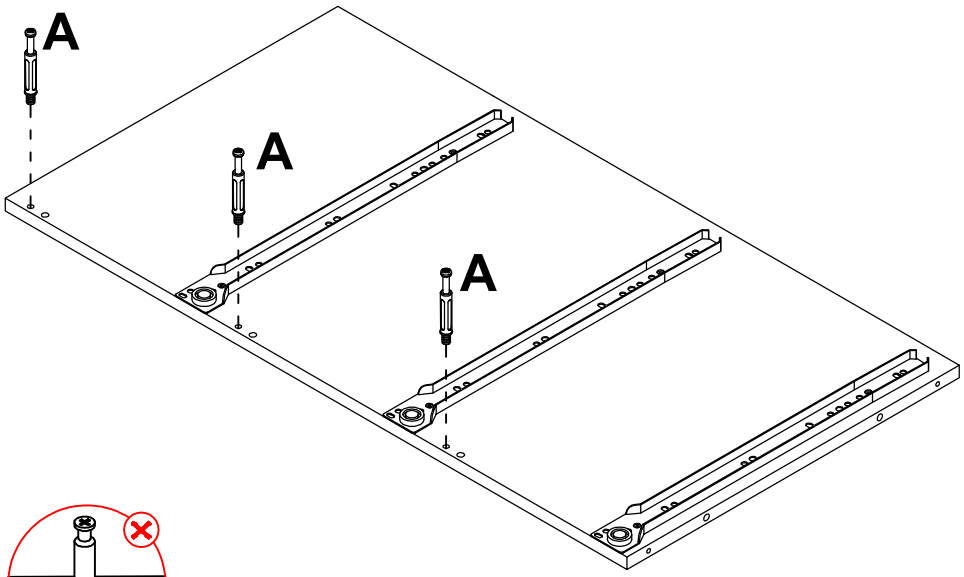

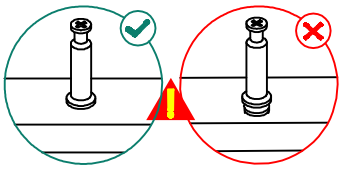

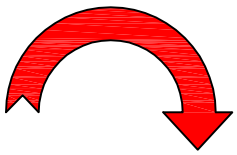



Note that when installing this step, you need to install the A screw from the opposite side.

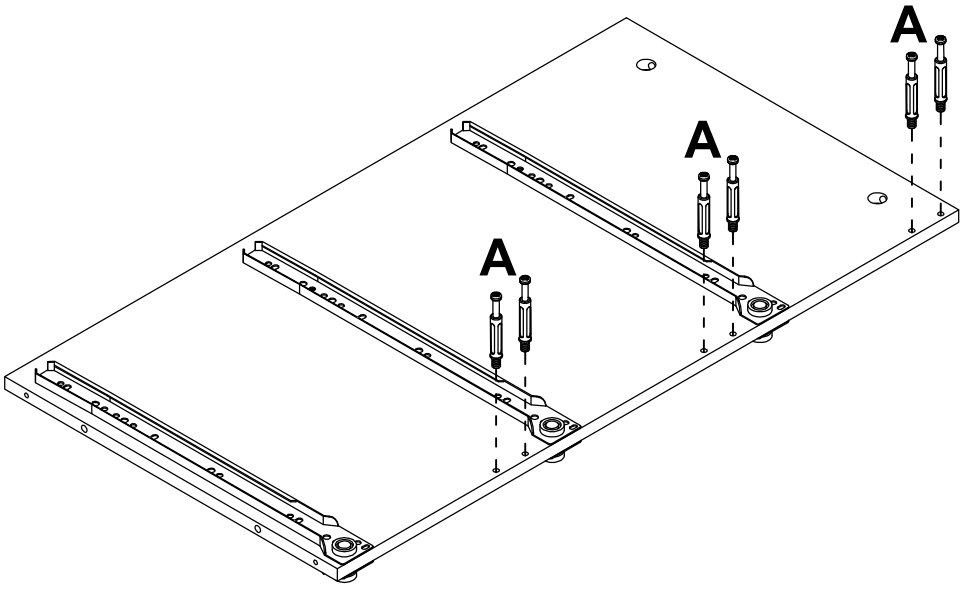

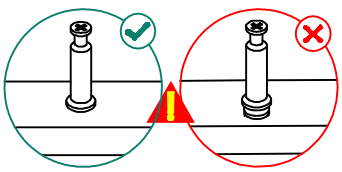

A

ST6*40mm
6PCS

ASSEMBLY INSTRUCTION

STEP 7

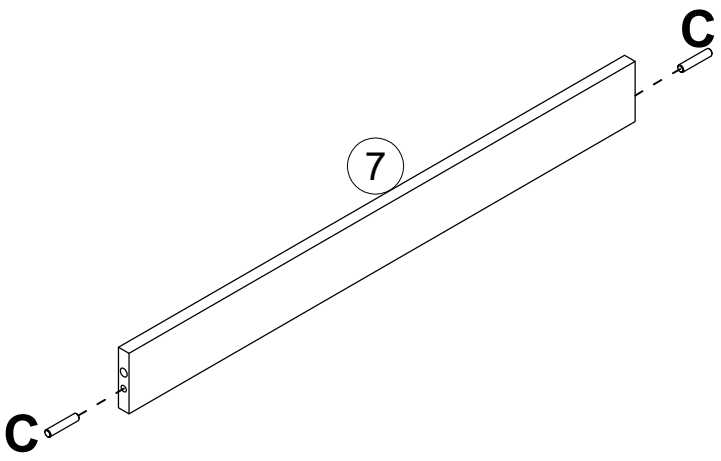

X3

C
Ø6*30mm
6PCS

STEP 8

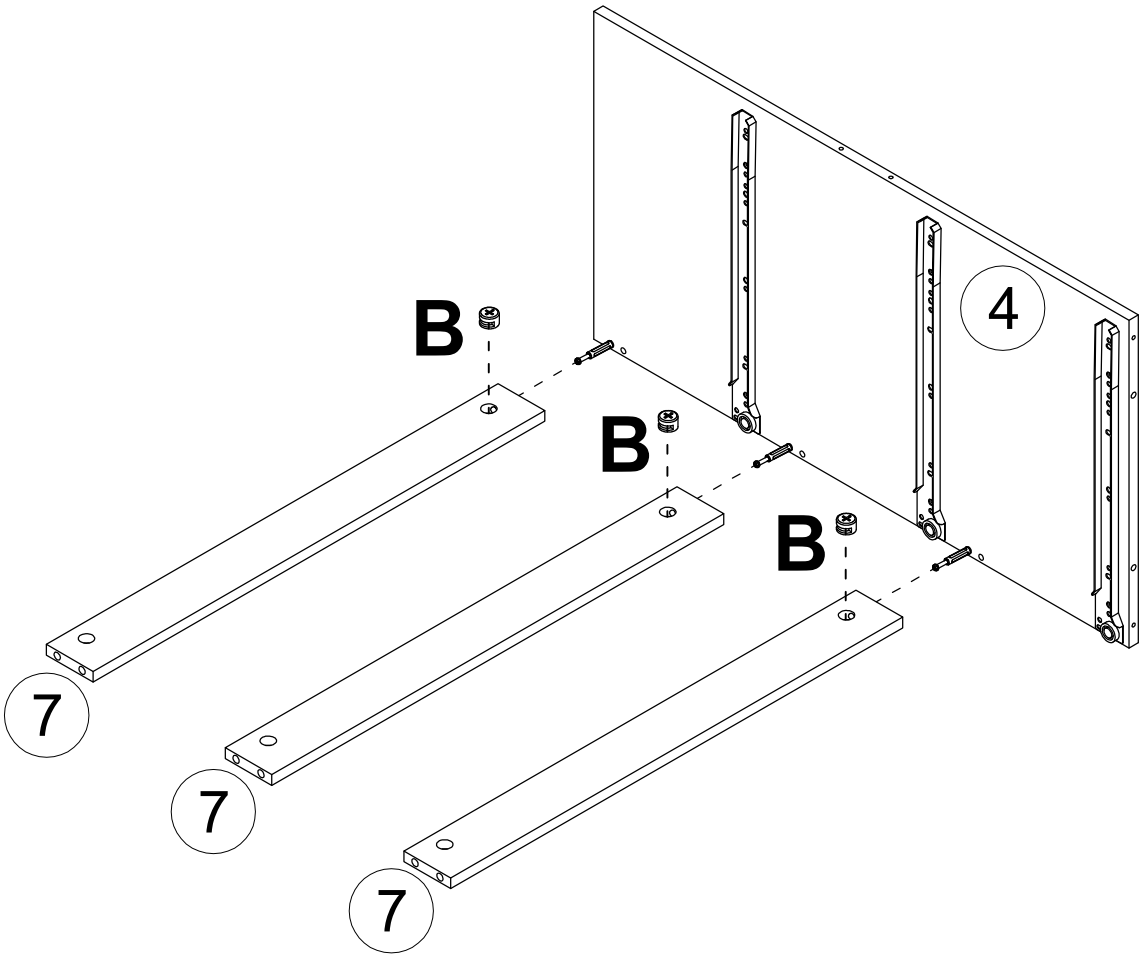

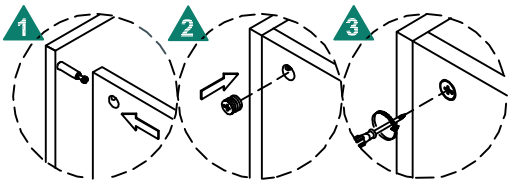

B
9.5
3PCS

ASSEMBLY INSTRUCTION

STEP 9

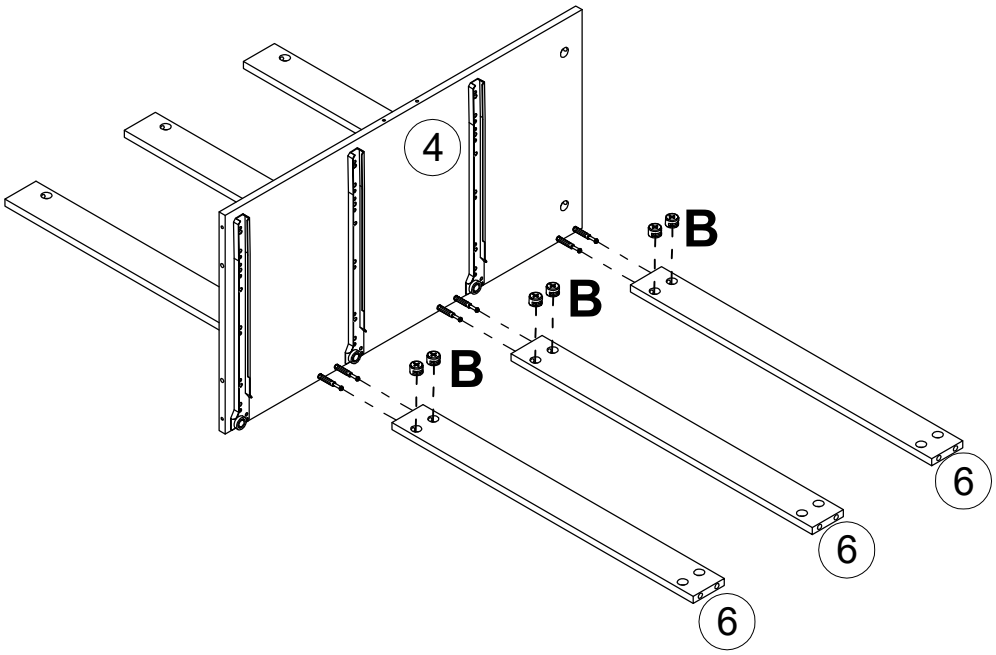

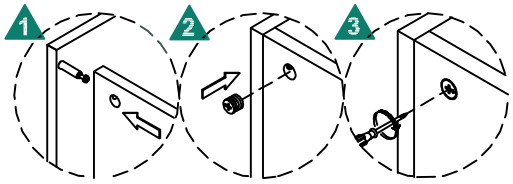

B
9.5
6PCS

STEP 10

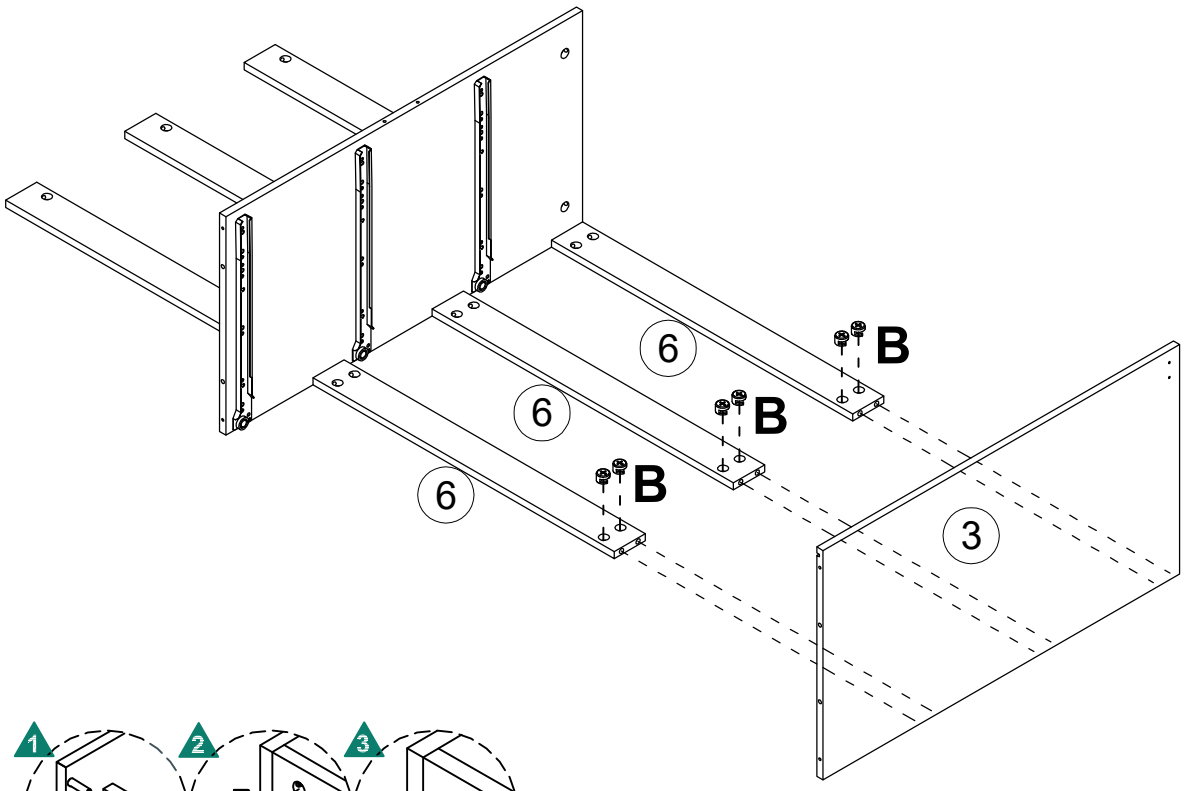

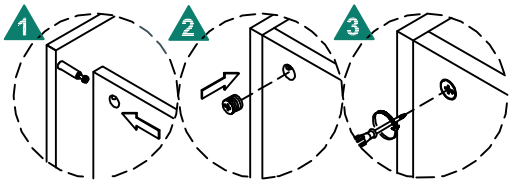

B
9.5
6PCS

ASSEMBLY INSTRUCTION

STEP 11

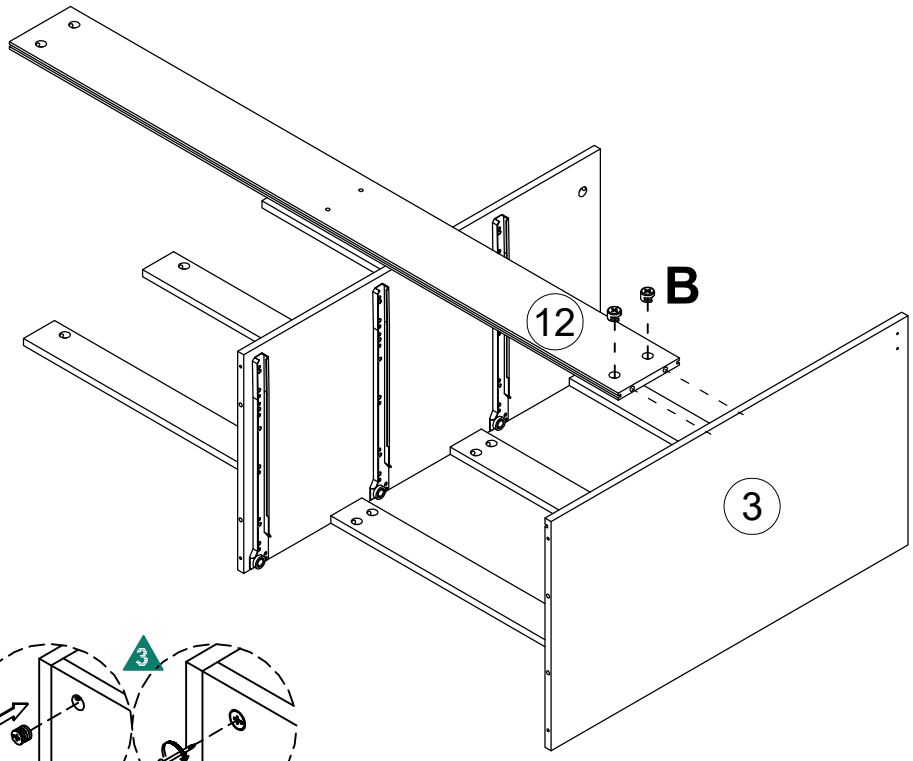

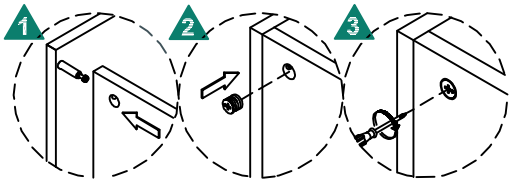

B

9.5
2PCS

STEP 12

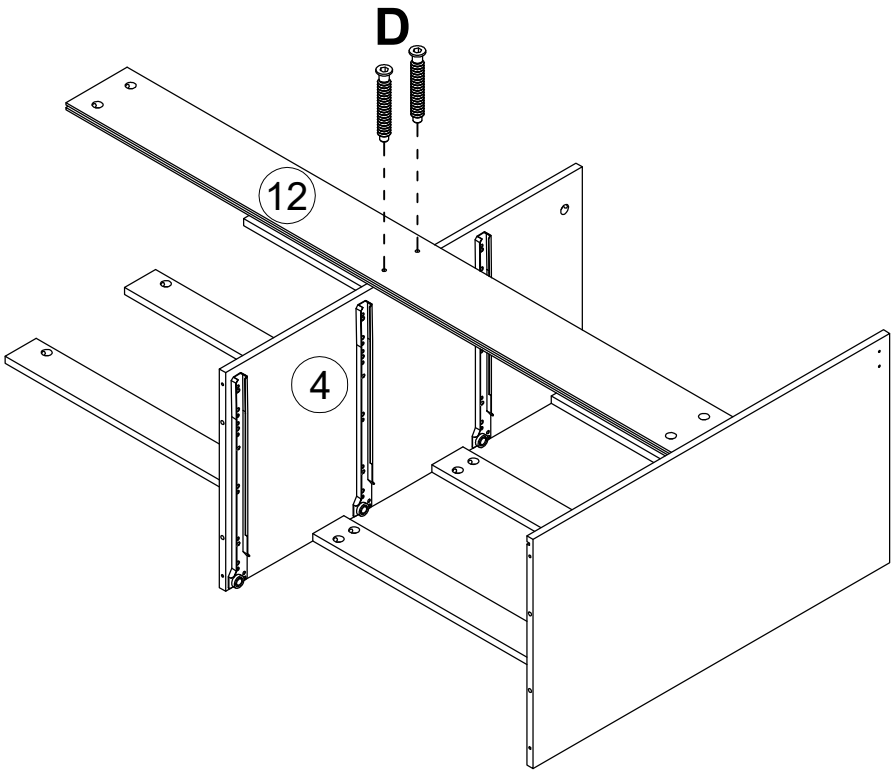

D

ST5*40mm
2PCS

ASSEMBLY INSTRUCTION

STEP 13

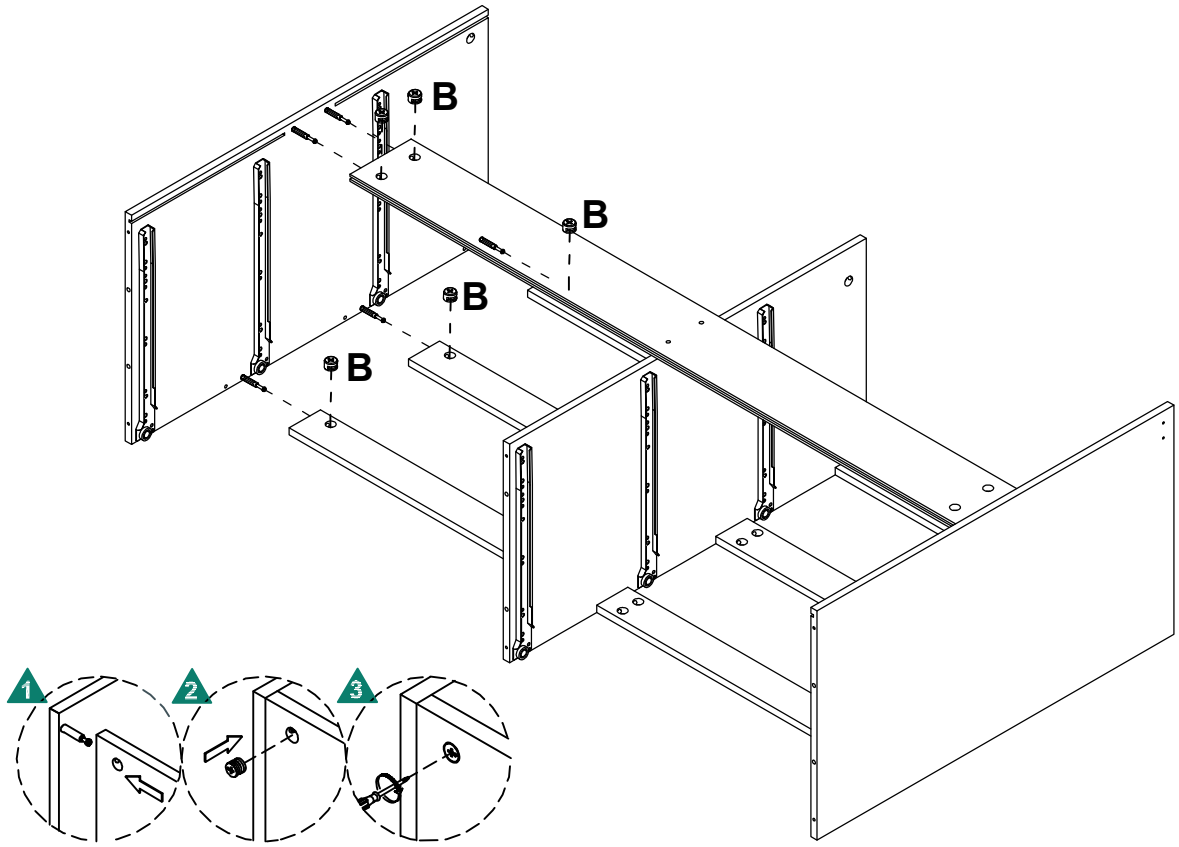

B

9.5
5PCS

STEP 14

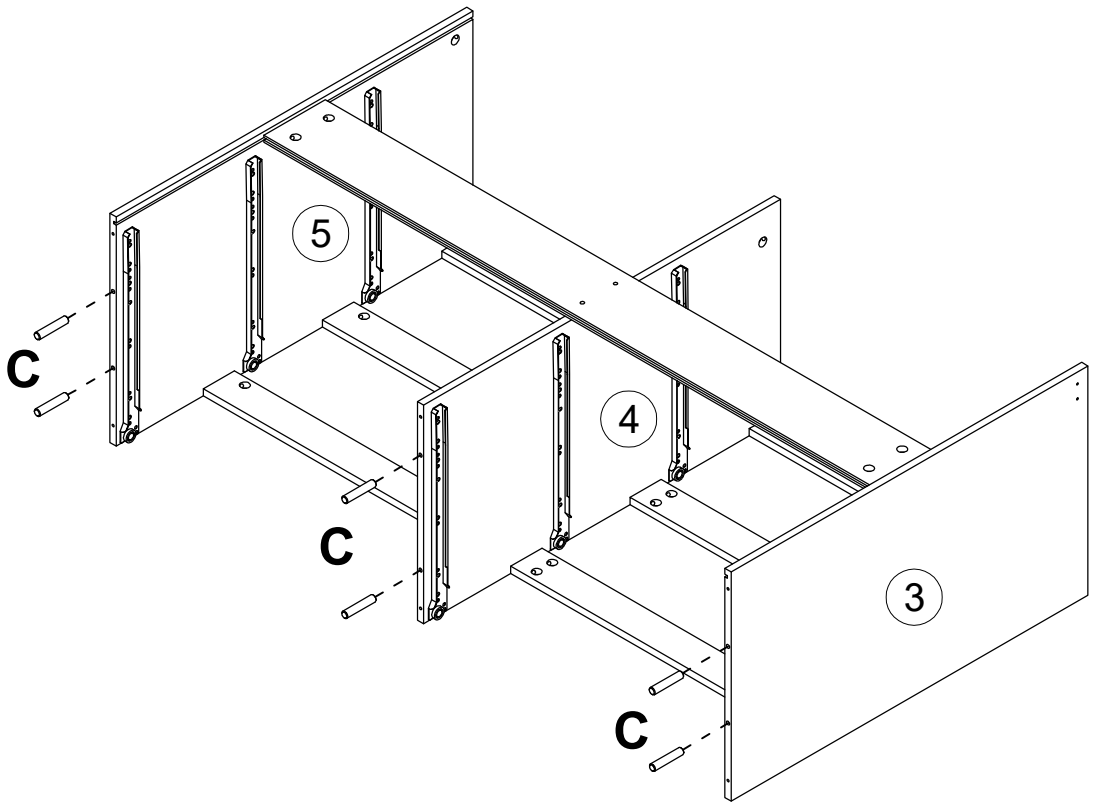

C

Ø6*30mm
6PCS

ASSEMBLY INSTRUCTION

STEP 15

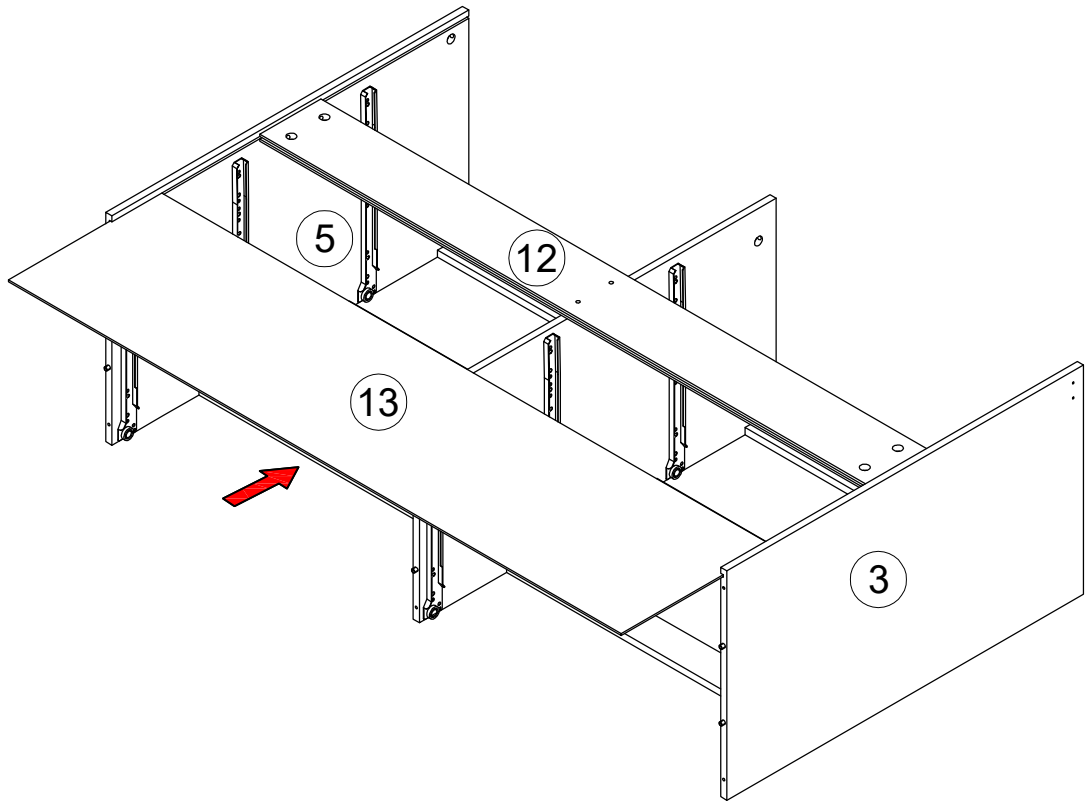

STEP 16

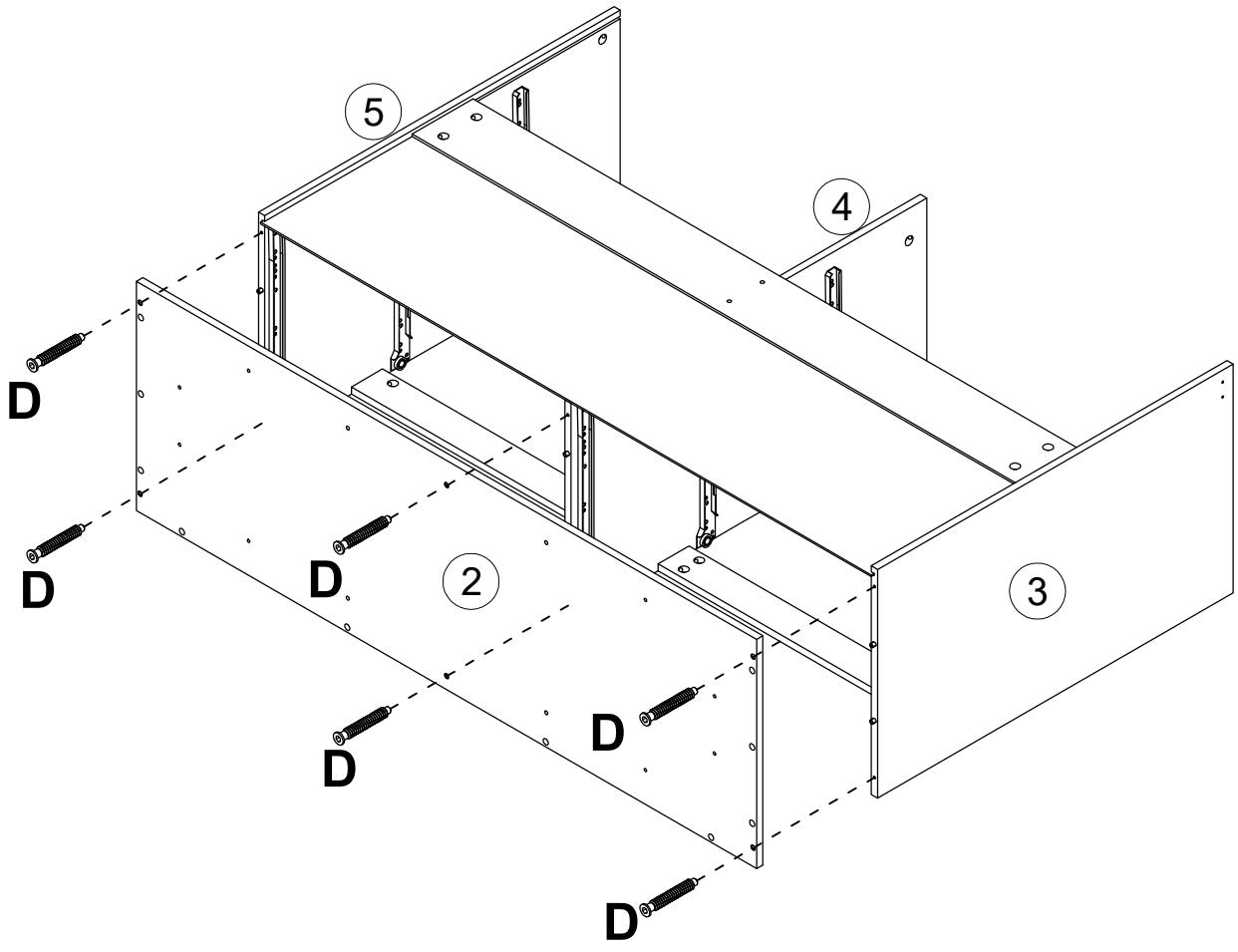

D

ST5*40mm
6PCS

ASSEMBLY INSTRUCTION

STEP 17

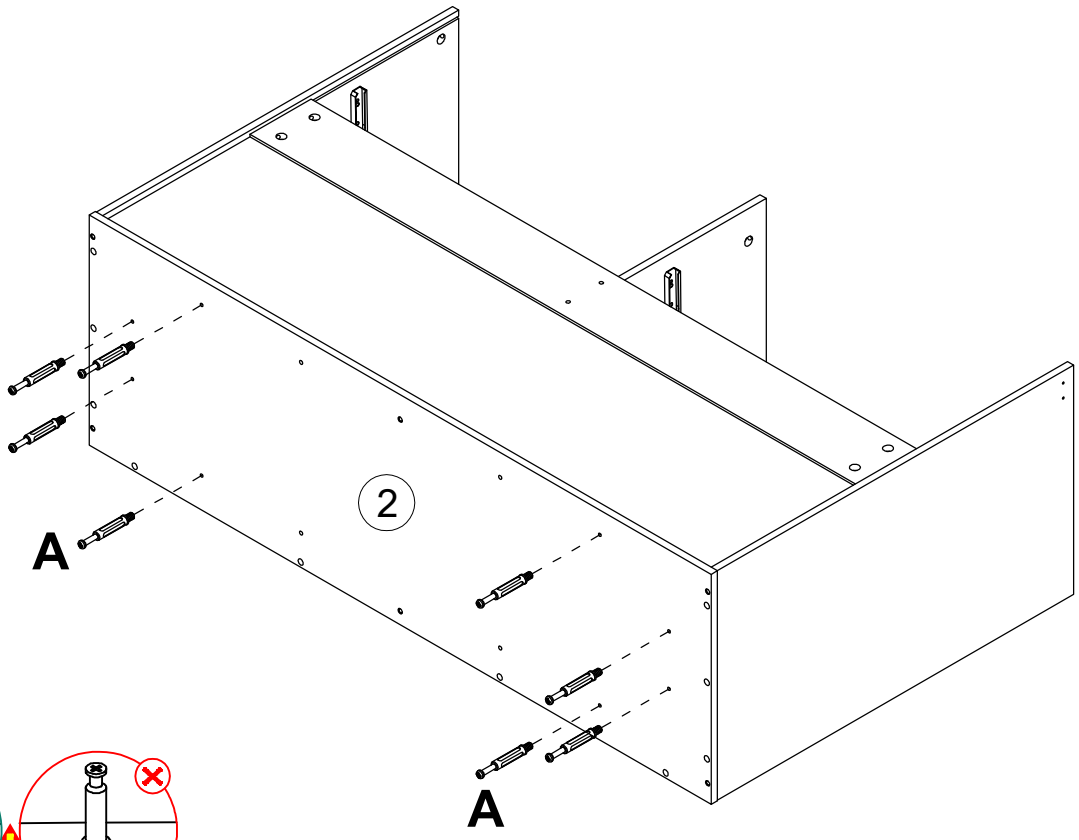

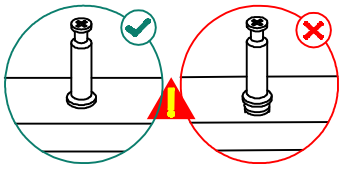

A
ST6*40mm
8PCS

STEP 18

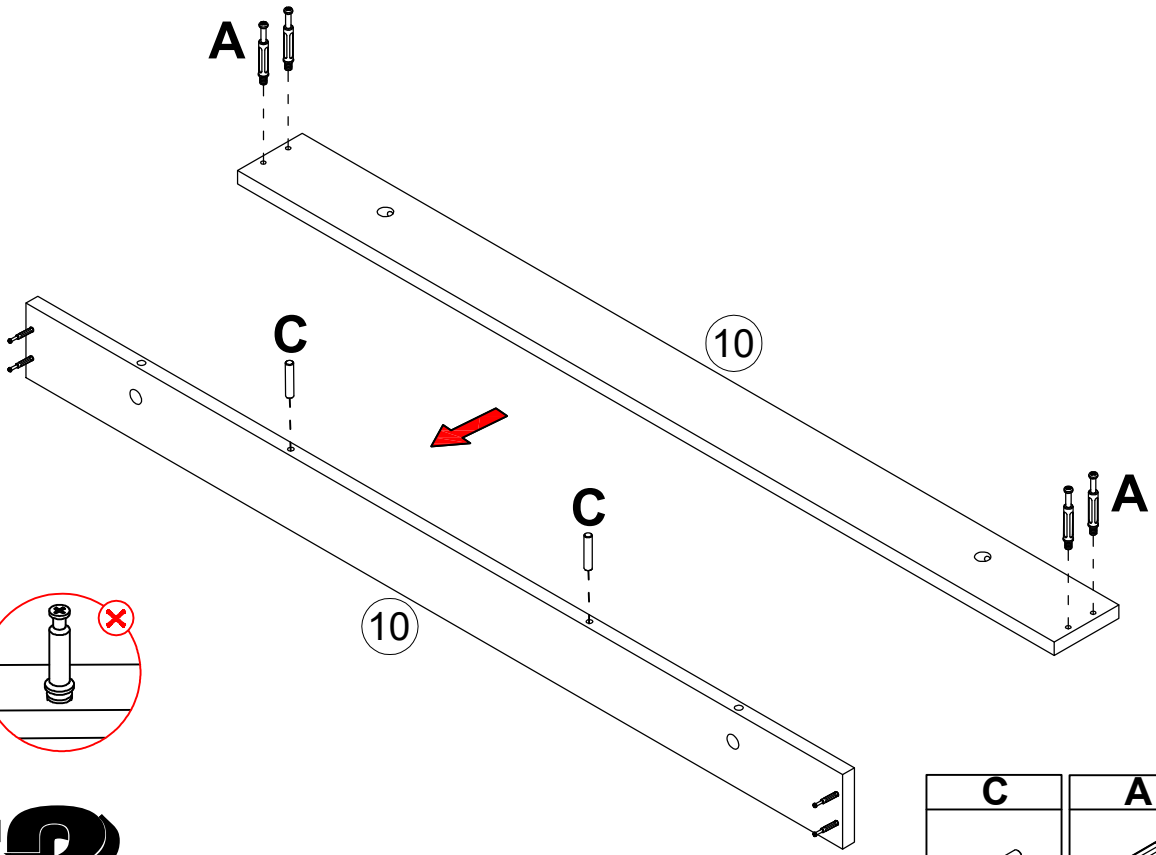

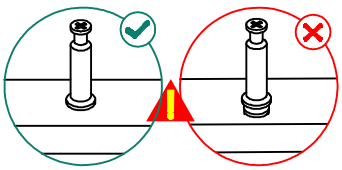

X2

C	A
Ø6*30mm	ST6*40mm
4PCS	8PCS

ASSEMBLY INSTRUCTION

STEP 19

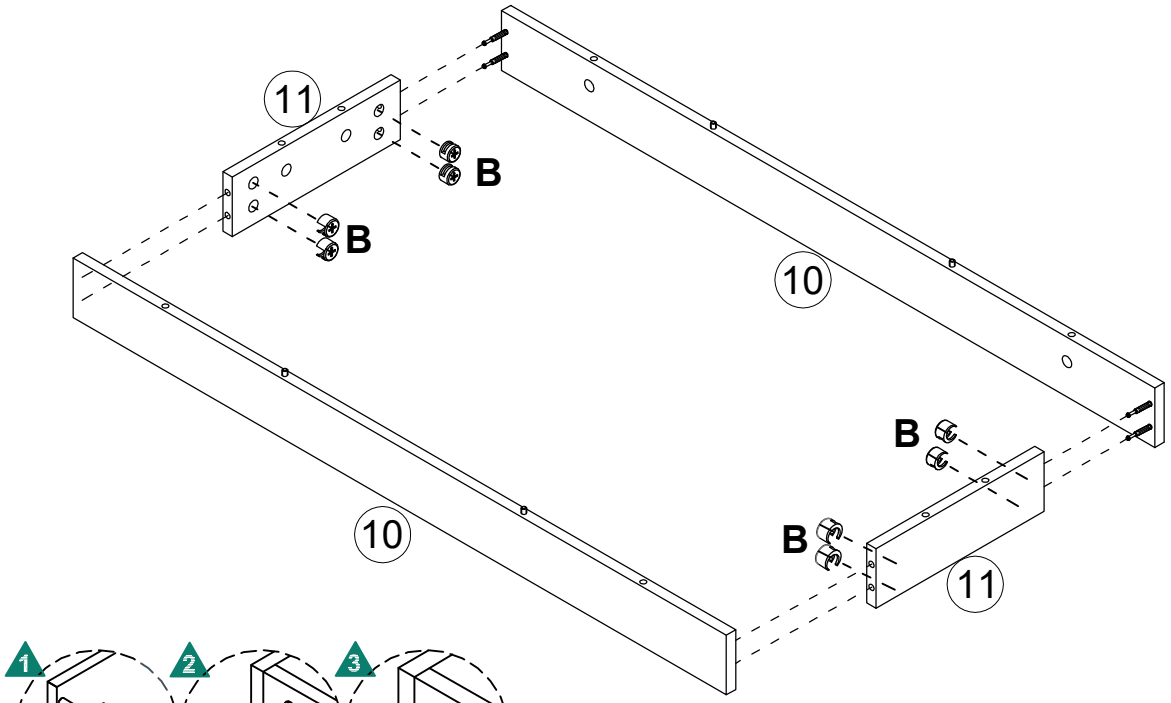

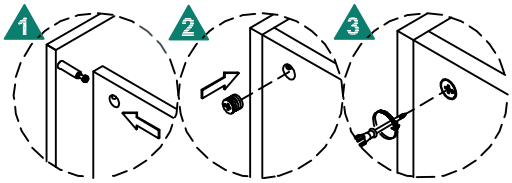

B

9.5
8PCS

STEP 20

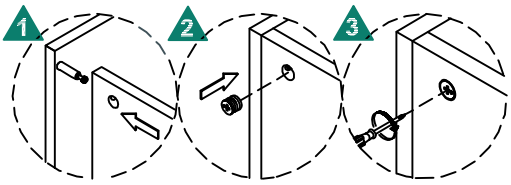

B

9.5
8PCS

ASSEMBLY INSTRUCTION

STEP 21

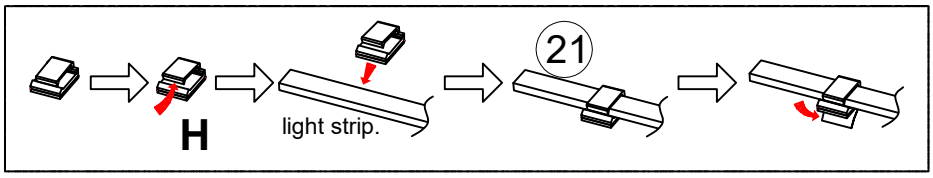

The light strip can be pasted to the desired position according to your own needs.

Note that you can paste the sponge pad according to your own needs.

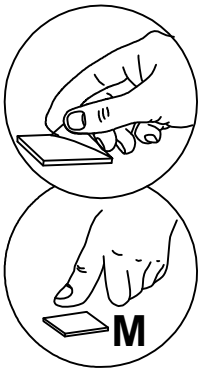

Carefully remove the plastic film behind the light strip.

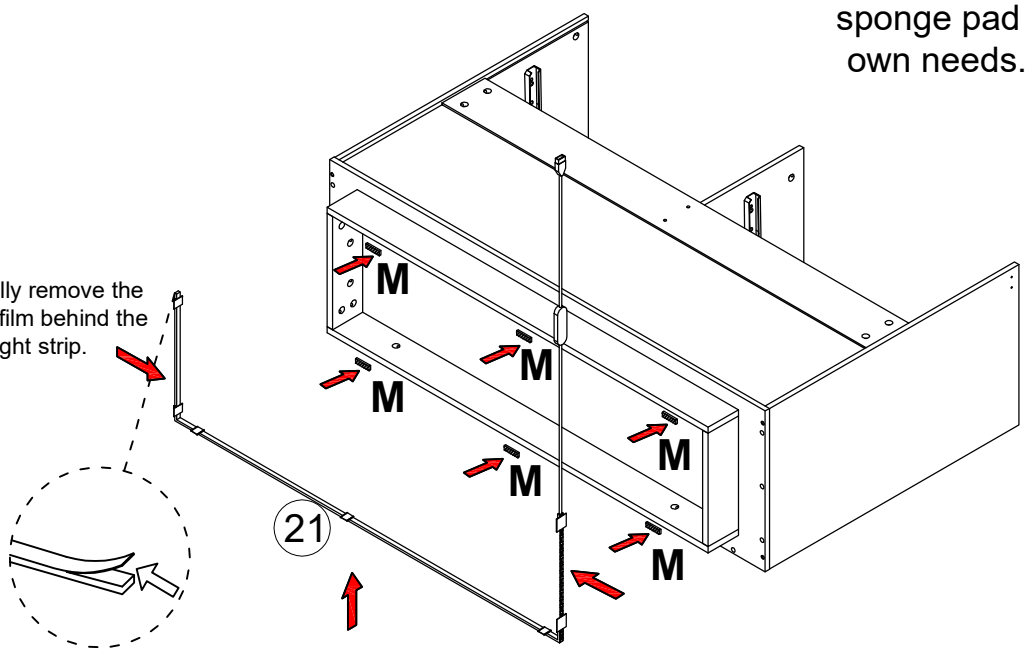

M	H
	
6PCS	7PCS

STEP 22

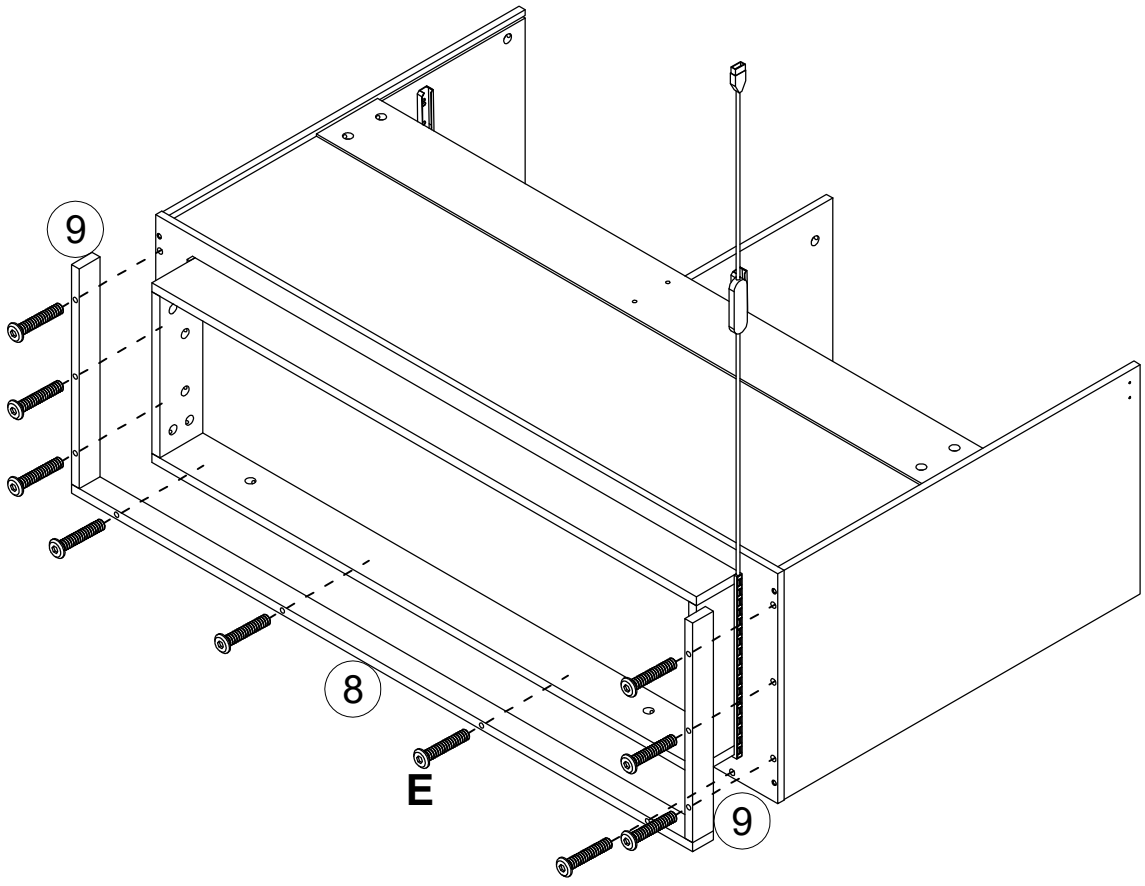

E

M6*45mm
10PCS

ASSEMBLY INSTRUCTION

STEP 23

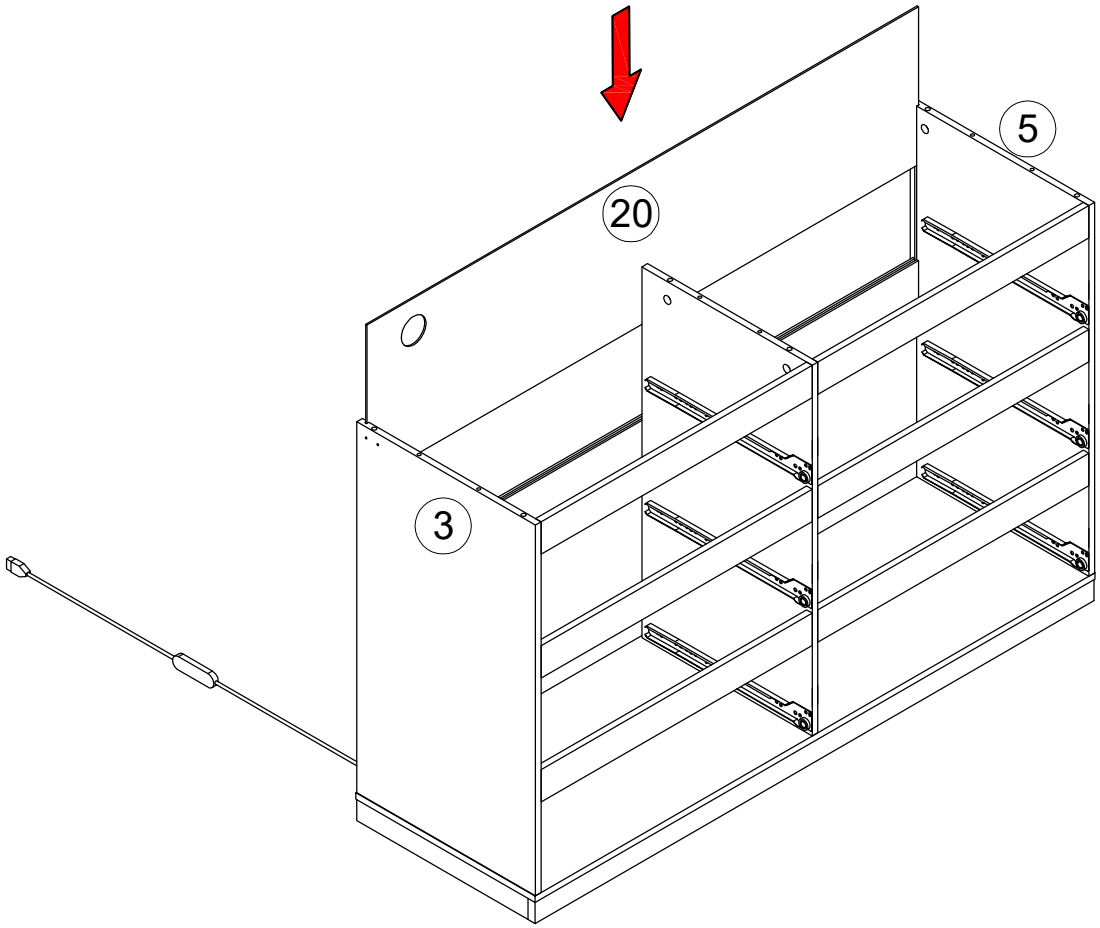

STEP 24

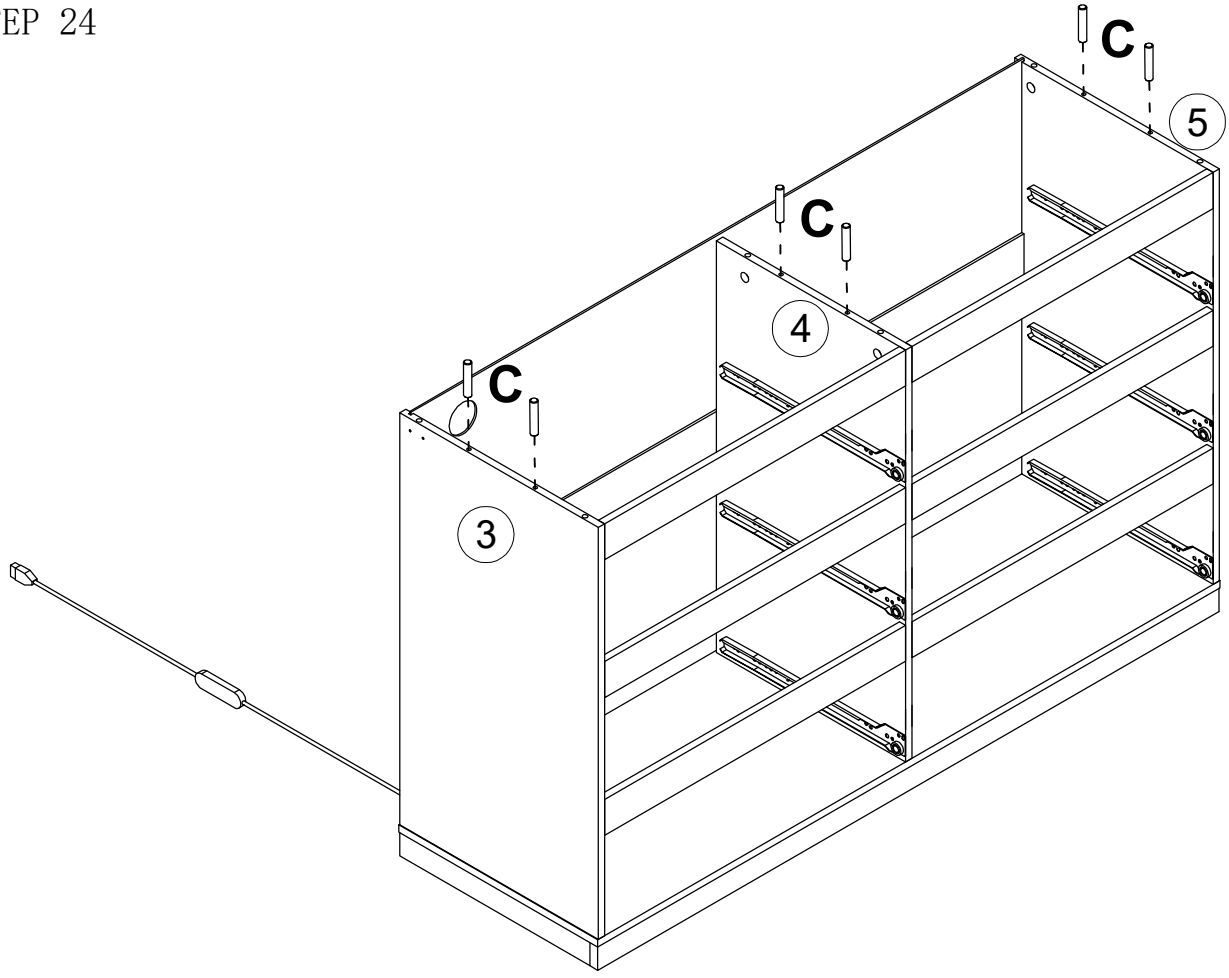

C
Ø6*30mm
6PCS

ASSEMBLY INSTRUCTION

STEP 25

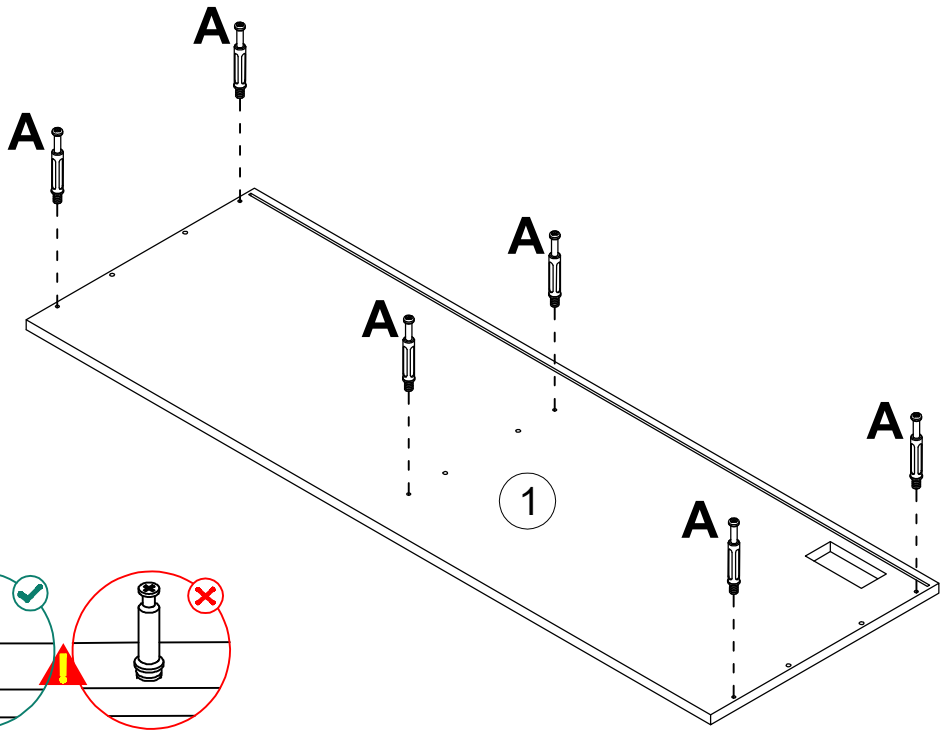

A

ST6*40mm
6PCS

STEP 26

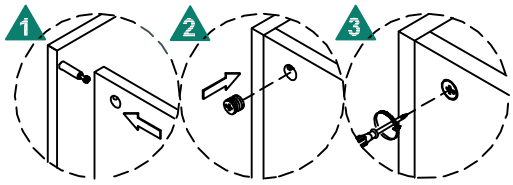

B

9.5
6PCS

ASSEMBLY INSTRUCTION

STEP 27

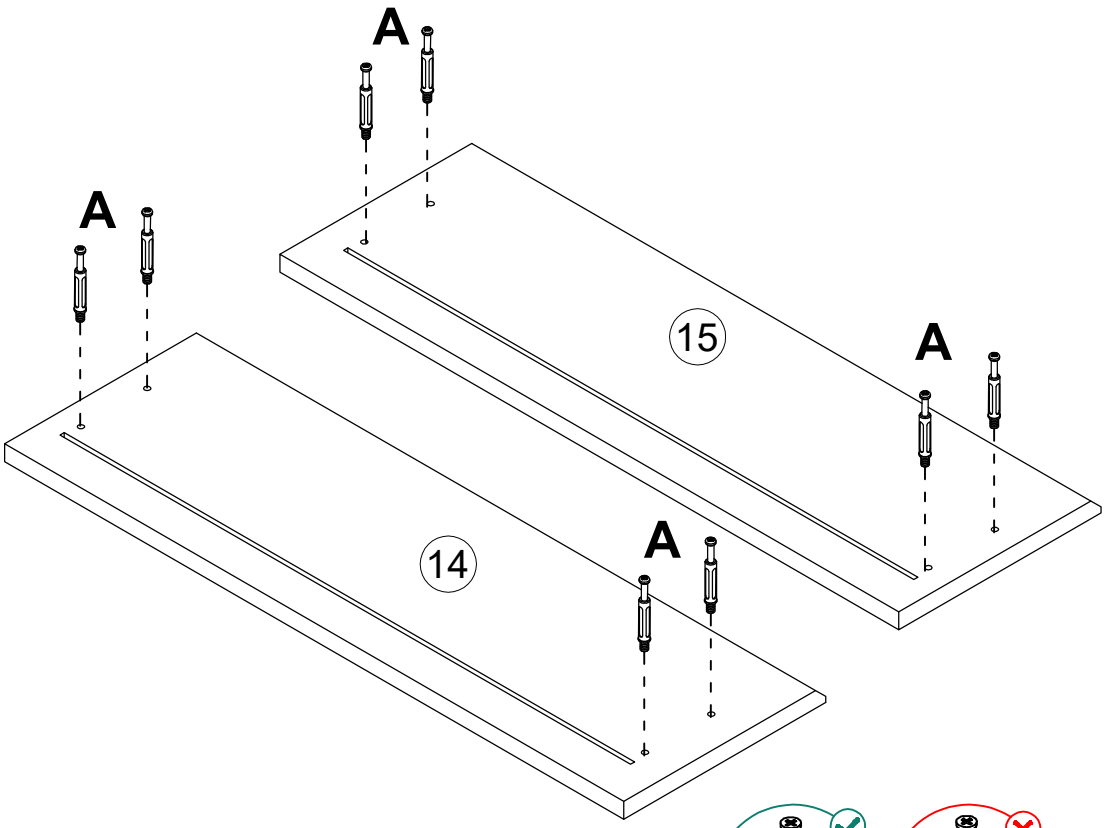

X3

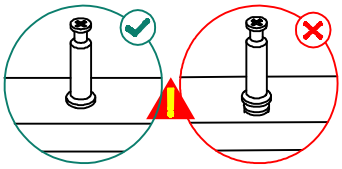

A

ST6*40mm
24PCS

STEP 28

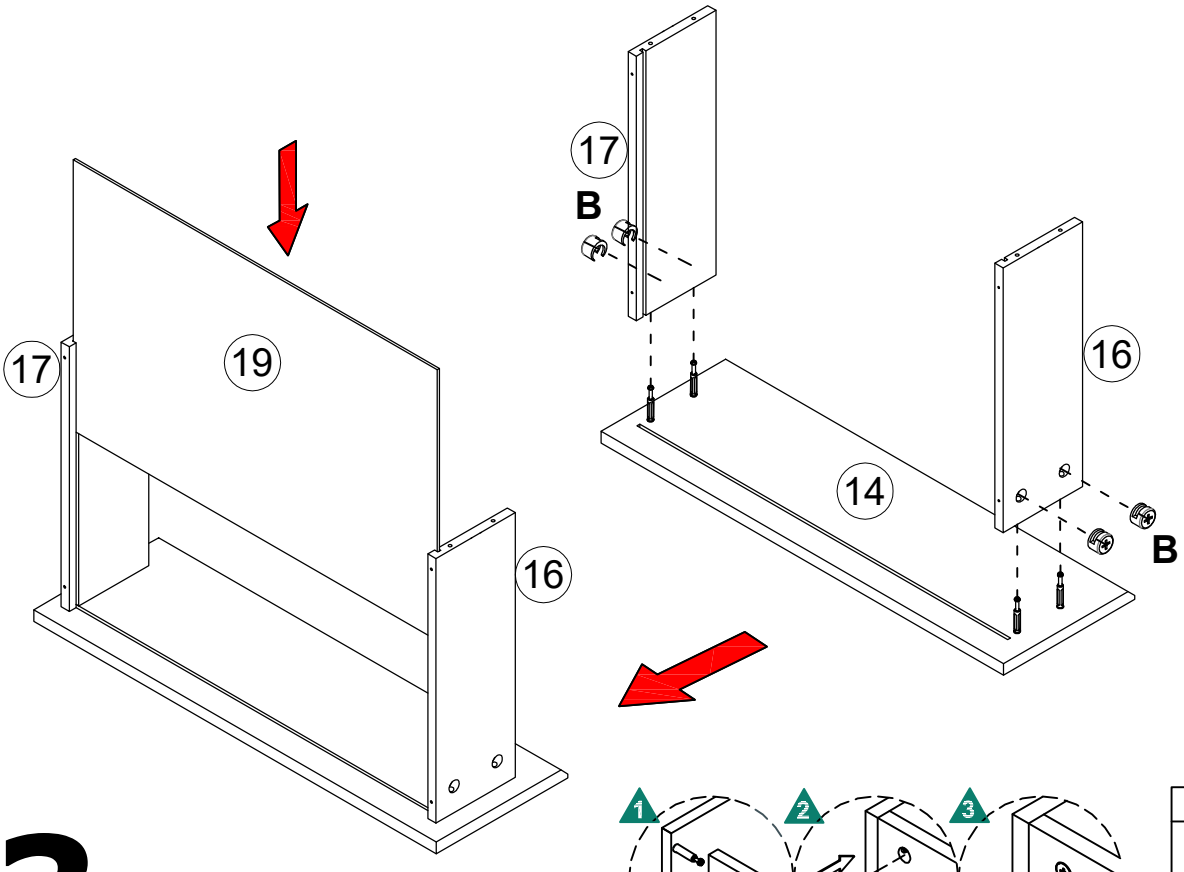

X3

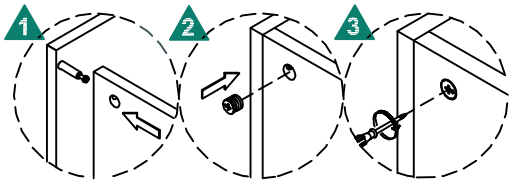

B

9.5
12PCS

ASSEMBLY INSTRUCTION

STEP 29

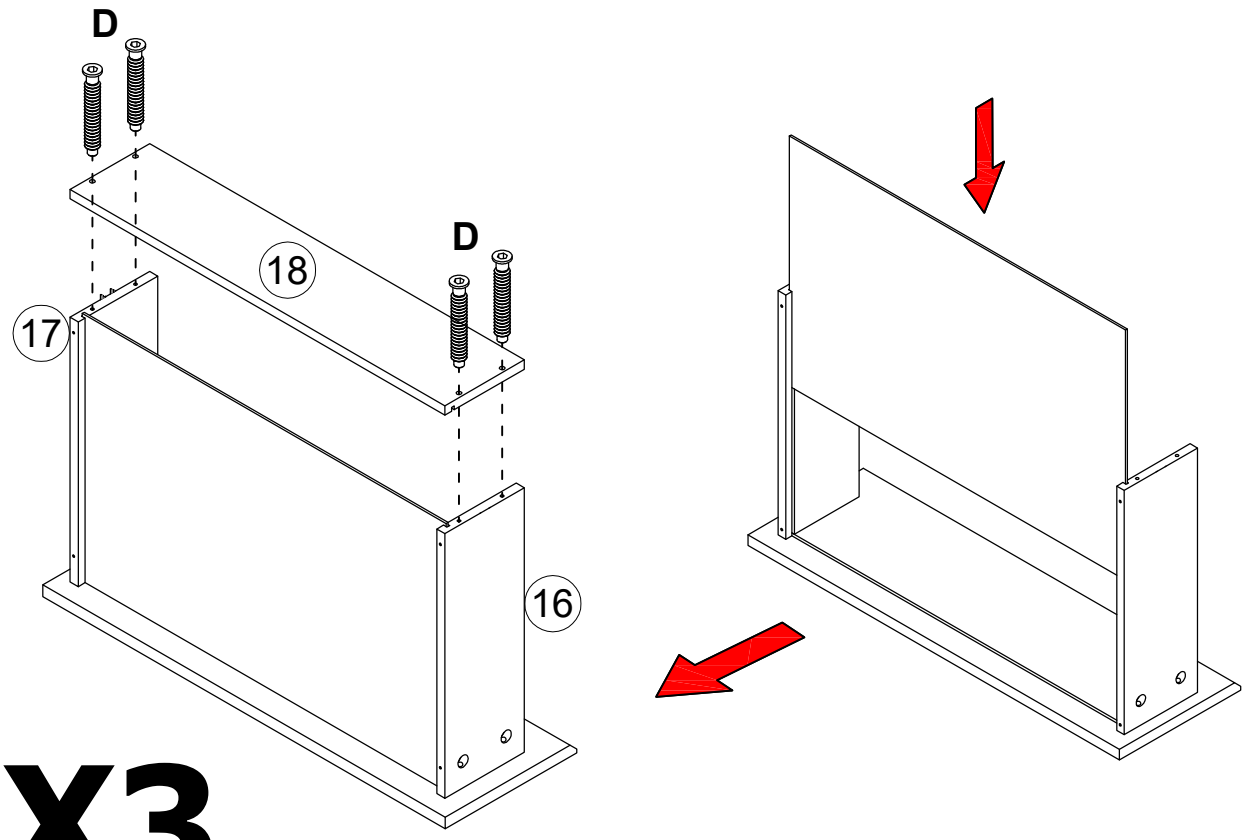

X3

D
ST5*40mm
12PCS

STEP 30

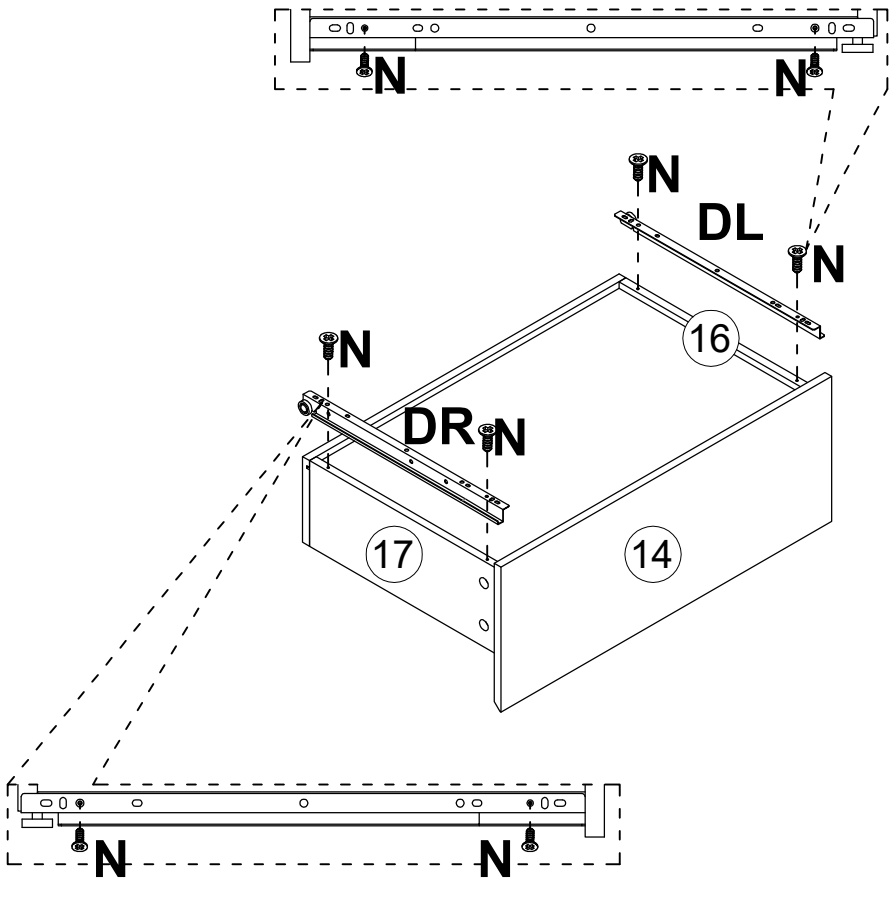

X3

N
ST3.5*12mm
12PCS

ASSEMBLY INSTRUCTION

STEP 31

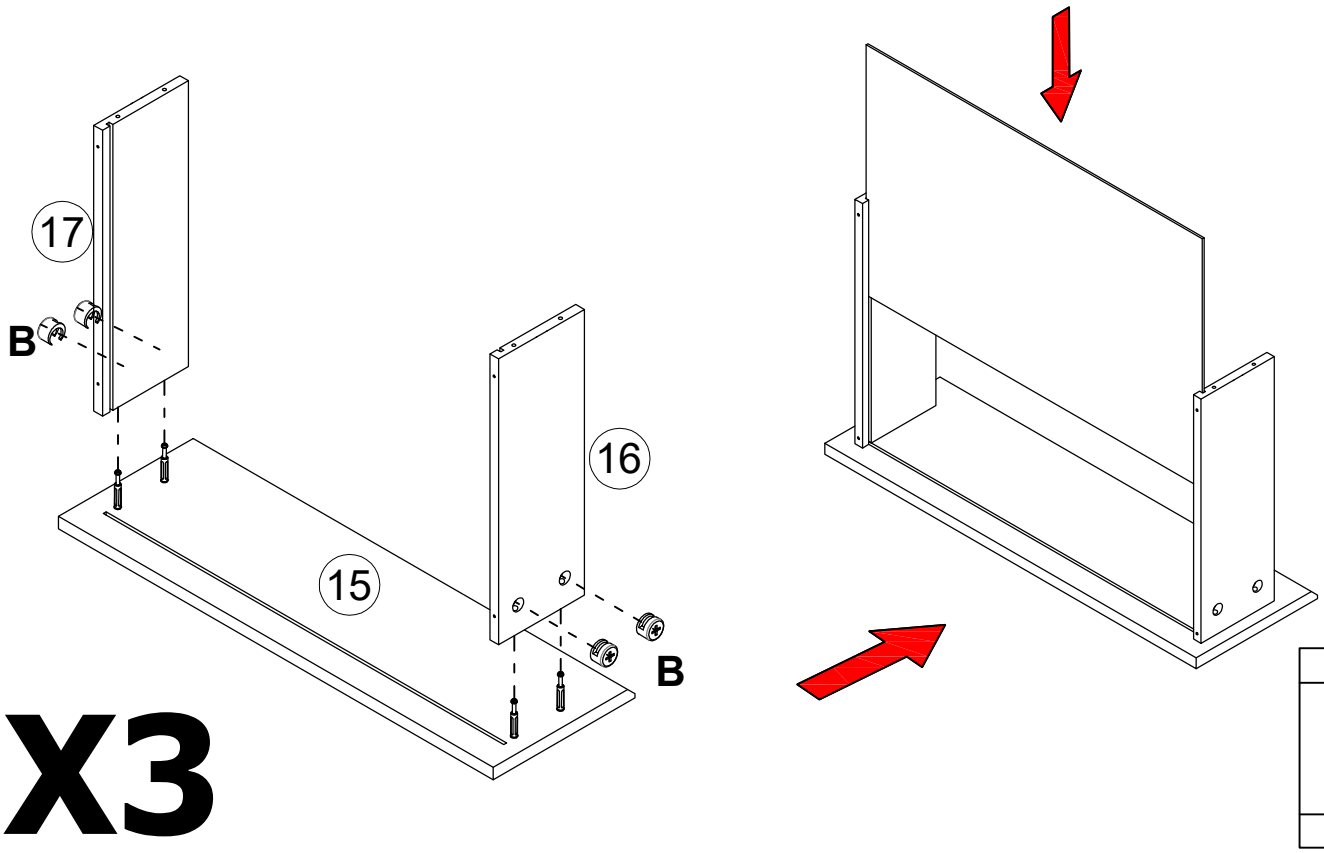

X3

B
9.5
12PCS

STEP 32

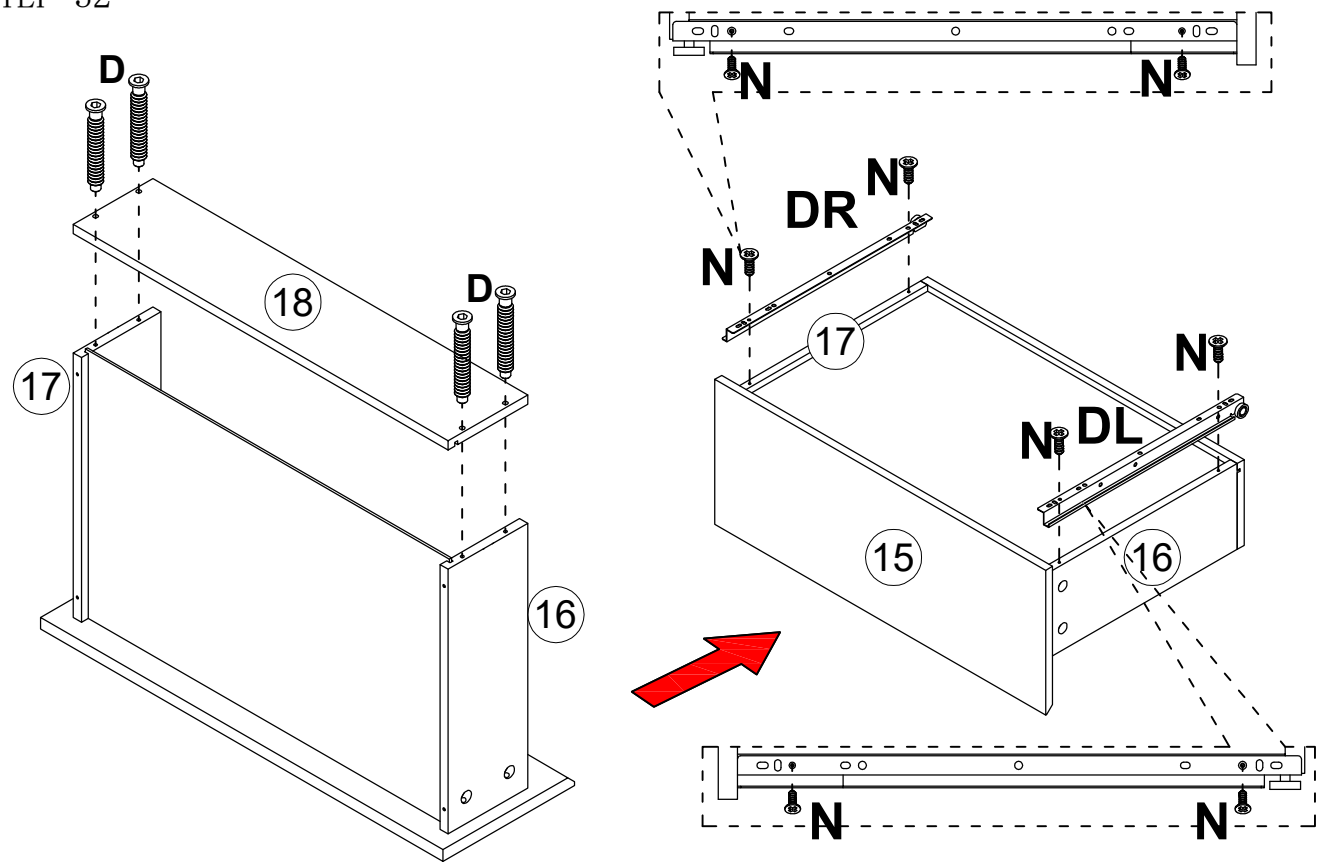

X3

N	D
ST3.5*12mm	ST5*40mm
12PCS	12PCS

ASSEMBLY INSTRUCTION

STEP 33

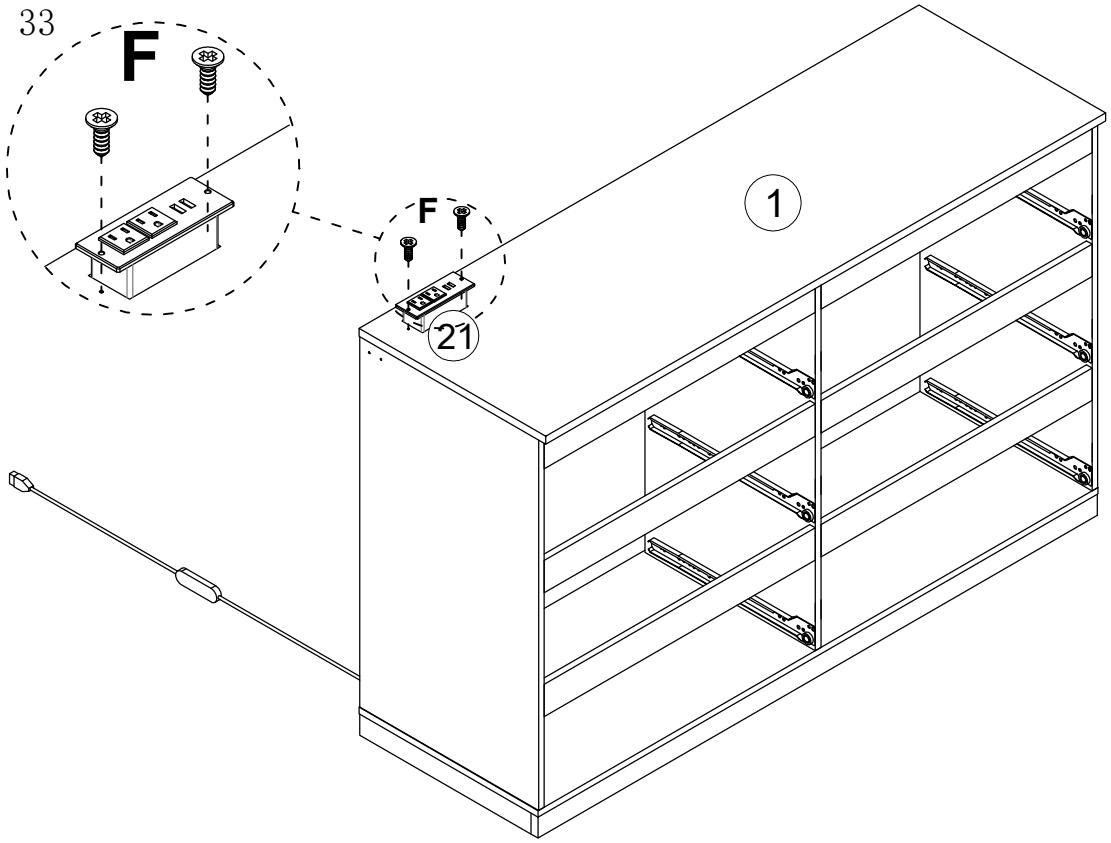

F
ST3.5*14mm
2PCS

STEP 34

Note that when the drawer is installed, it is inclined upward and the bottom wheel of the drawer is stuck in the CR and CL rail grooves.

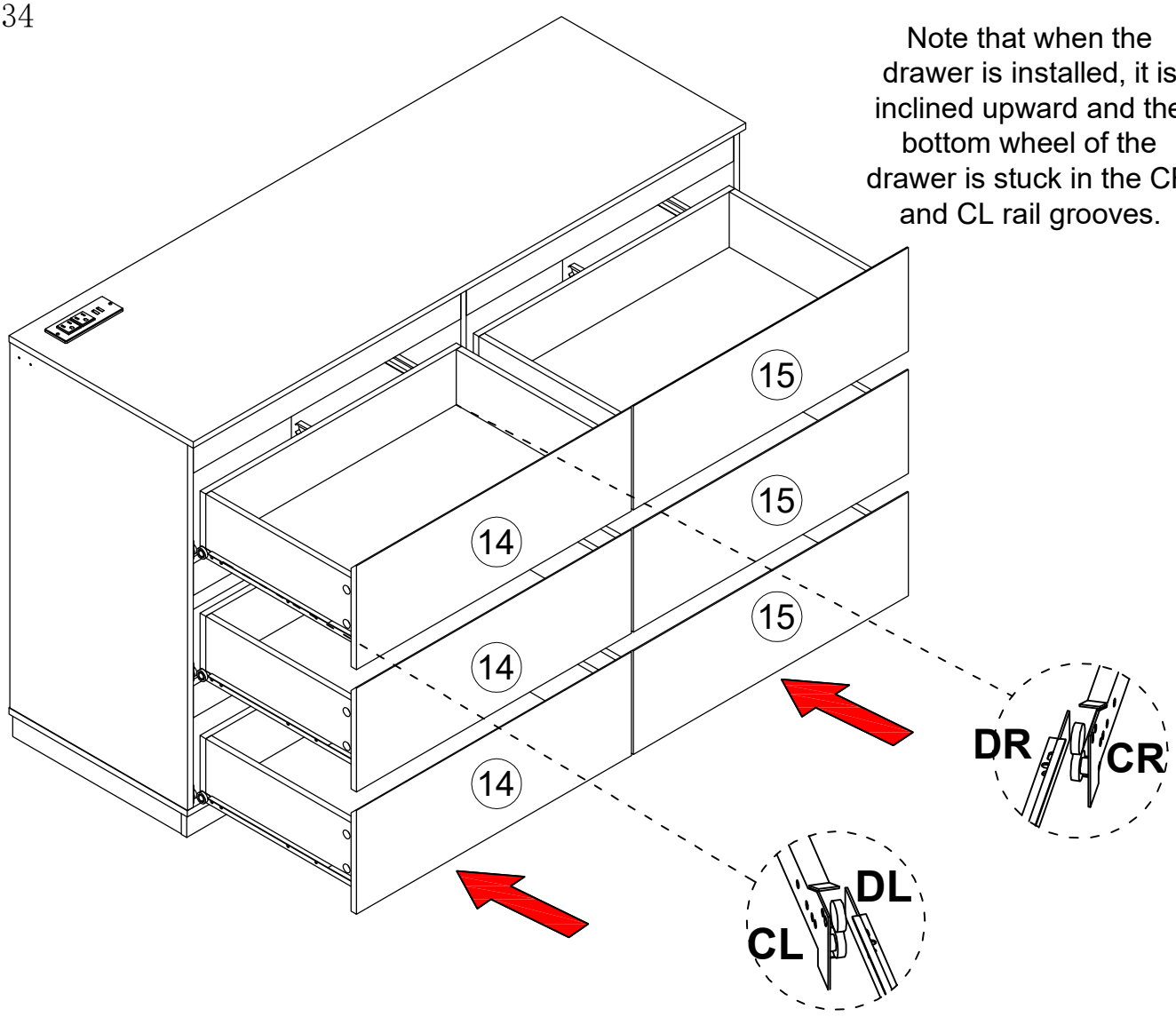

ASSEMBLY INSTRUCTION

STEP 35

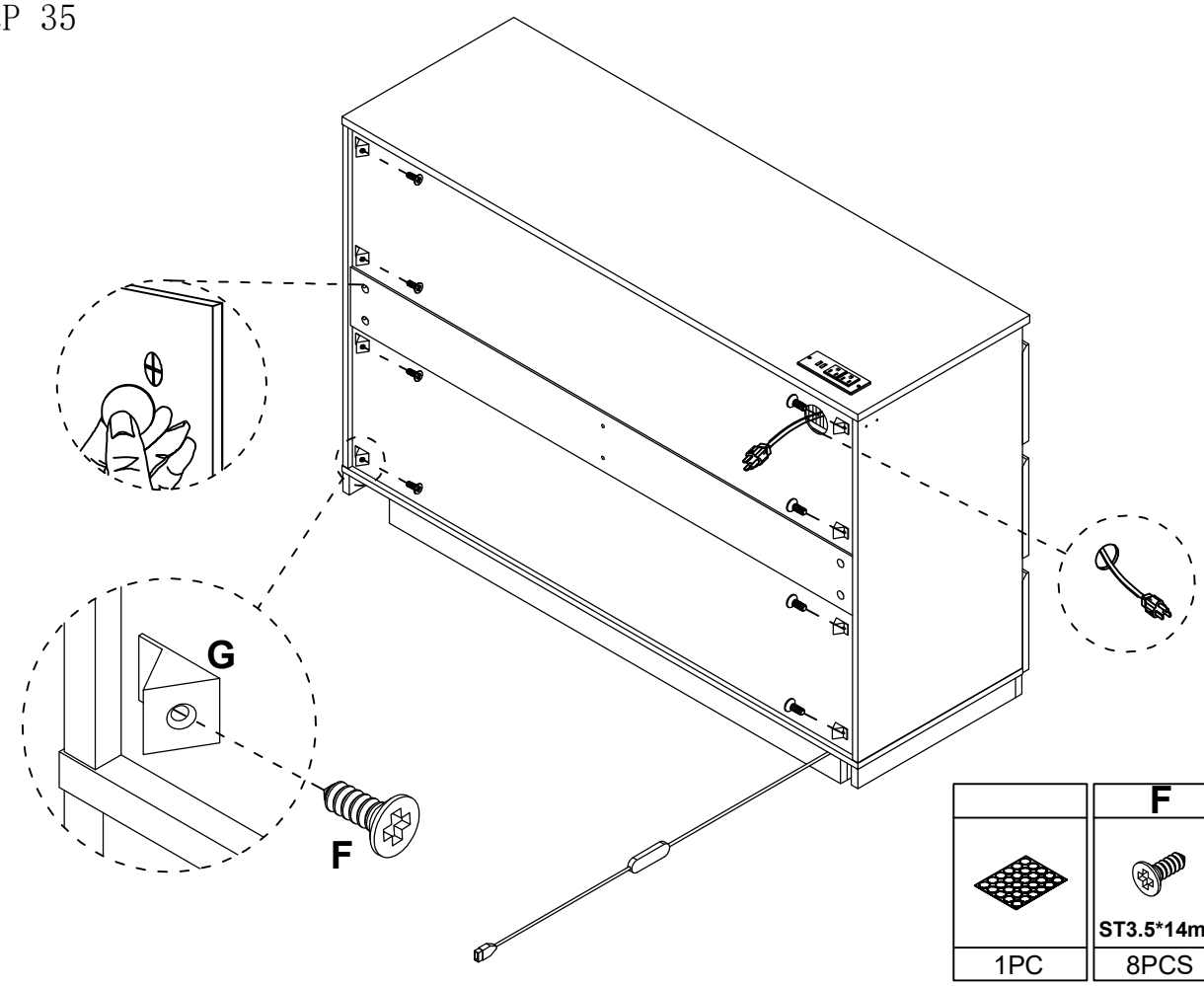

	F	G
	ST3.5*14mm	
1PC	8PCS	8PCS

STEP 36

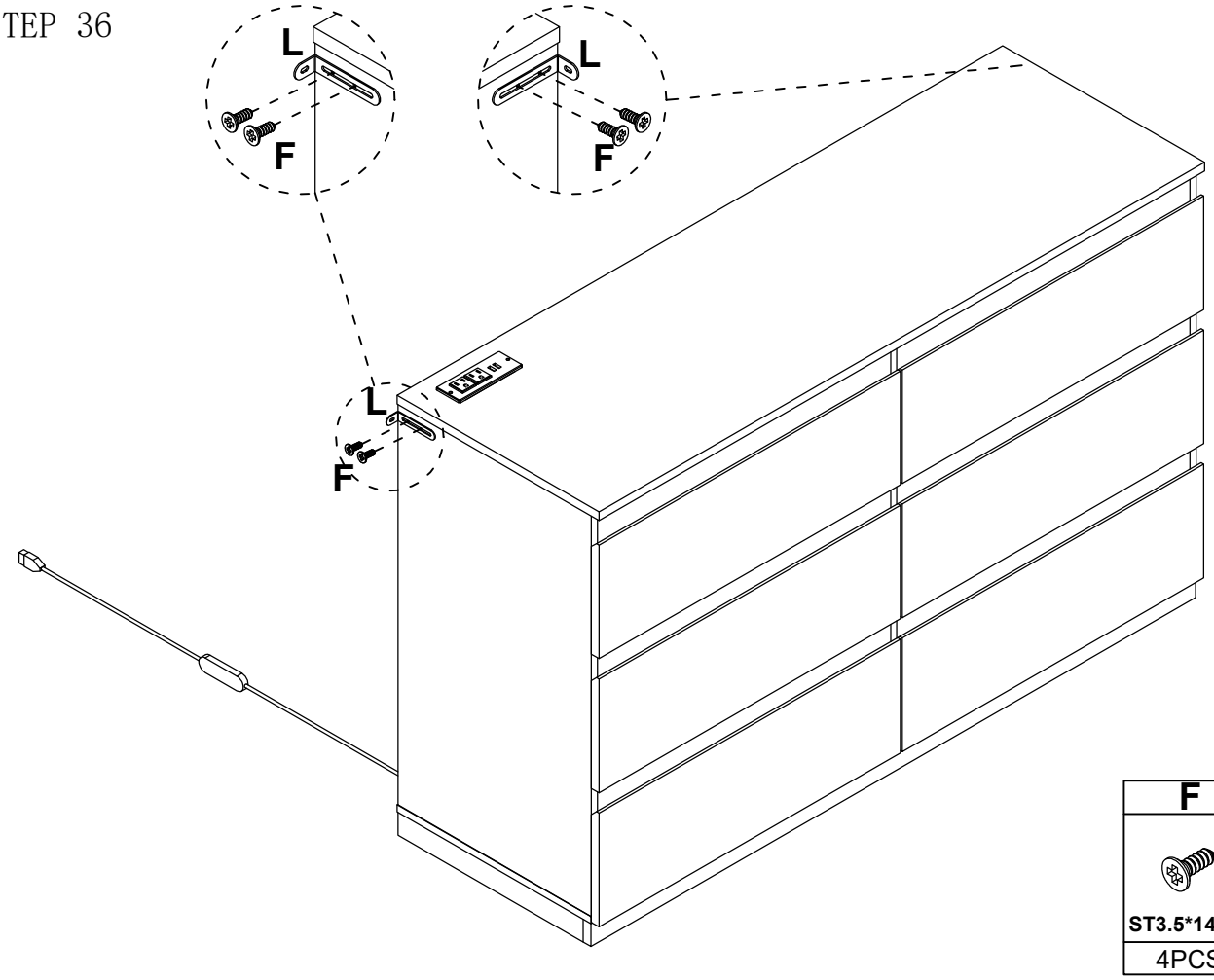

F	L
ST3.5*14mm	
4PCS	2PCS

STEP 37

WARNING

In order to prevent overturning this product must be used with the wall attachment device provided.

The furniture must be
permanently fixed to the wall using the provided
anti-tip device to prevent it from tipping over.
Mark the drilling positions on the wall with a pencil.
Drill a small hole at the
marked position.
Insert the wall anchor into the hole.
Use the provided screws to
fix the anti-tip belt to the wall.

