20X40FT Carport

Instructions for Assembly

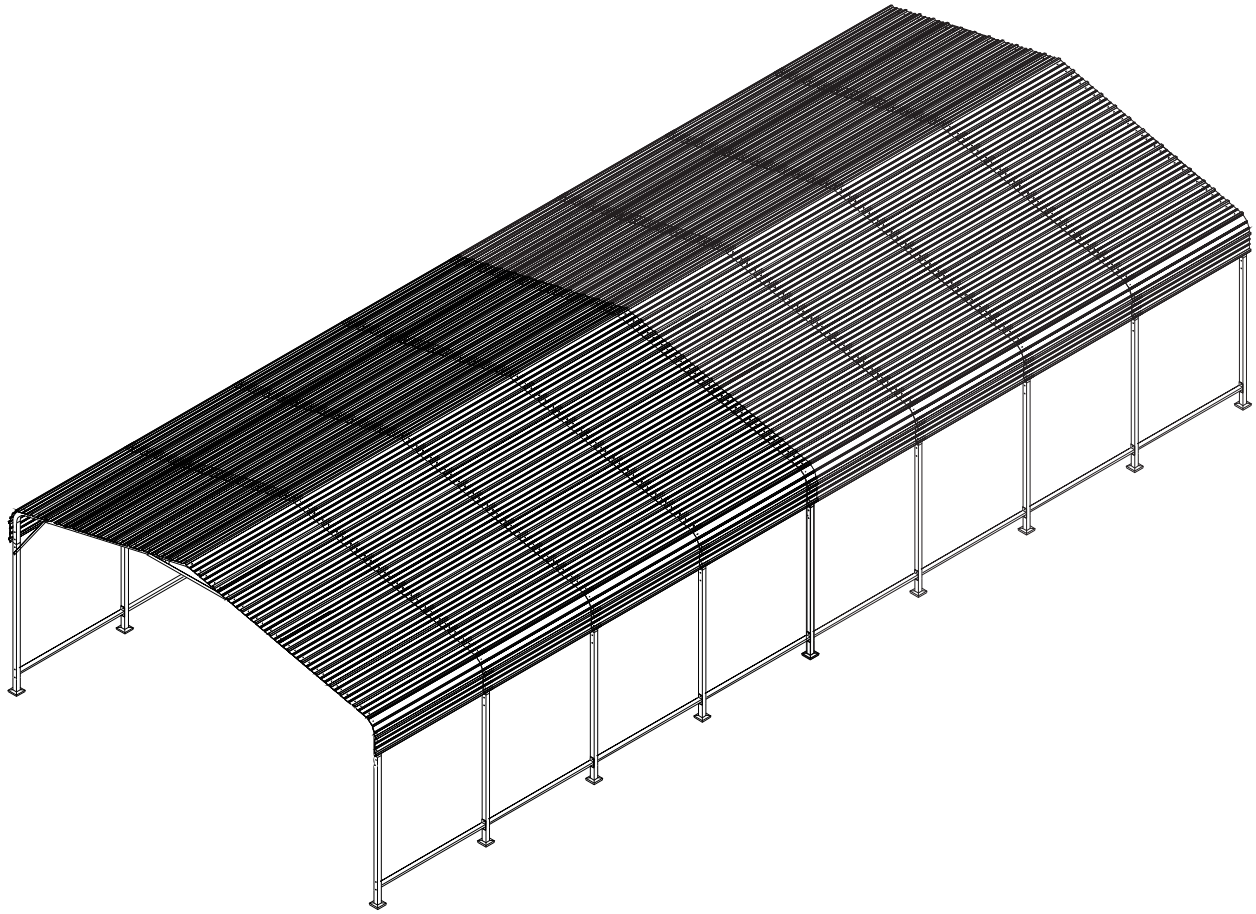

Minimum of 5-6 People is required for a safe assembly of the product

You wil receive ten separate boxes for this product to be fully assembled. Please make sureall boxes arrived in good condition before assembling. It happens sometimes whenboxes arrive separately due to postponed carrier's shipping, and your patience is reallyappreciated! You can also reach out to us at any time at **EASYHAWKservice@outlook.com** for any questions!

EASYHAWKservice@outlook.com

STOP

Missing Parts,Questions on Assembly?

Email me: EASYHAWKservice@outlook.com

Do not return to dealer they are not equipped to handle your requests.

We will reply to you within 1 business day.

Get Ready: Think Ahead!

Prep Work: Before you dive into setting up your new metal carport, make sure to check out your local building codes. These codes might have specific guidelines on footings, placement, and other key details. Don't skip this step!

Understand the Guide: We've put together detailed instructions for you. Take some time to go through them. They're packed with crucial info and handy tips that'll make your installation smoother and even more satisfying.

Tools & Supplies: You're going to need some basic tools and materials. The anchoring method and foundation type you choose will determine what exactly you'll need. So, make a comprehensive list based on your plan to stay organized.

Before You Start Assembling

Instruction Manual: This manual's got everything you need for setting up your carport. Go through all the instructions before starting. As you assemble, following the steps in order is key to getting it right.

Check Your Parts: Make sure you've got all the necessary parts and the right quantities as listed. They should all be in your package, neatly packed within the carton. We've thrown in some extra fasteners too, just to make things easier for you.

Exploded View Diagram: This diagram shows all the parts (except screws and bolts). Look over everything before you start. Getting familiar with the hardware and fasteners now will save you time and hassle during installation.

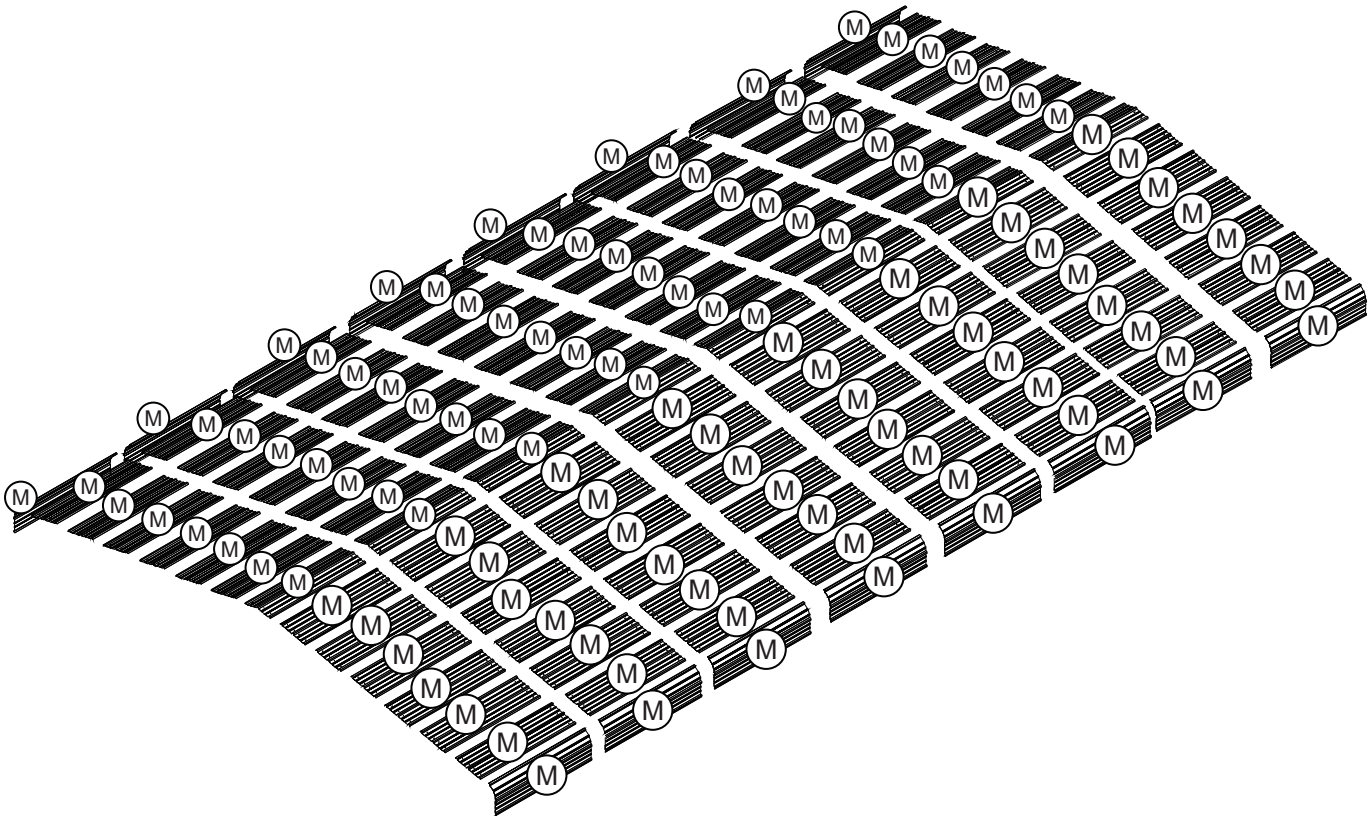
M

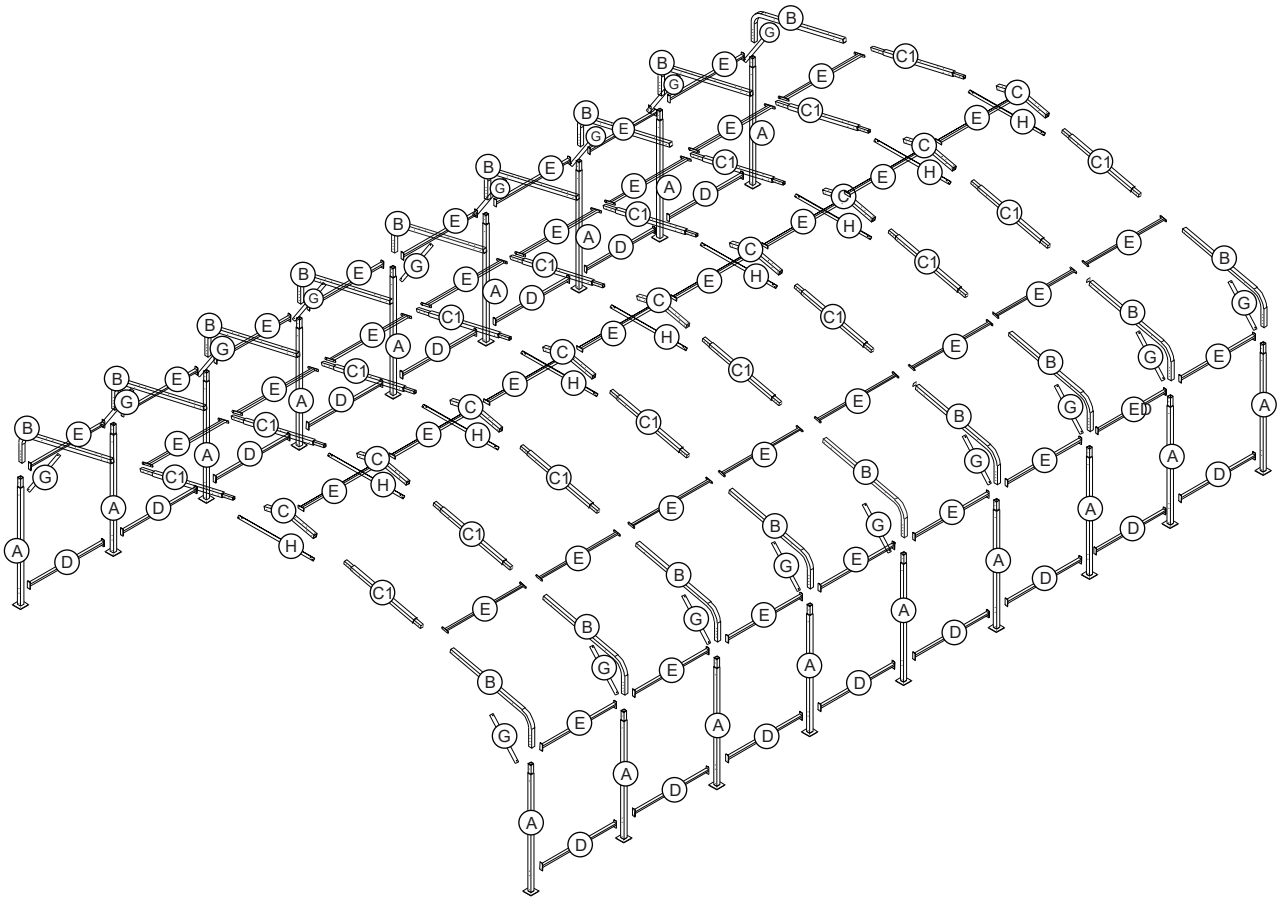
A
B
C
C1
D
E
G
H

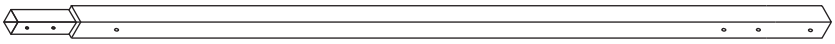

A x18

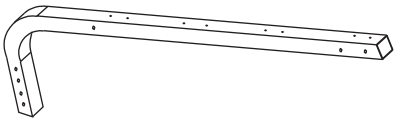

B x18

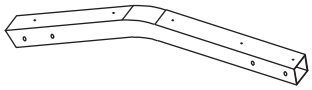

C x9



C1 x18



D x16



E x40



G x18



H x9



I x18



J x558 +10



K x5



L x1

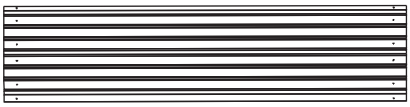

M x120



M6*15

N x36



M6*65

O x270 +10

3.5

P x1



M6

Q x306 +10



M6

R x270 +10

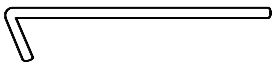

S x36

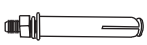

M6x62

T x36



U x18



V x1

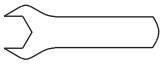

W x1

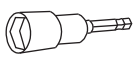

X x2

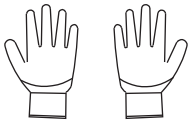

Y x4

Step 1

X18

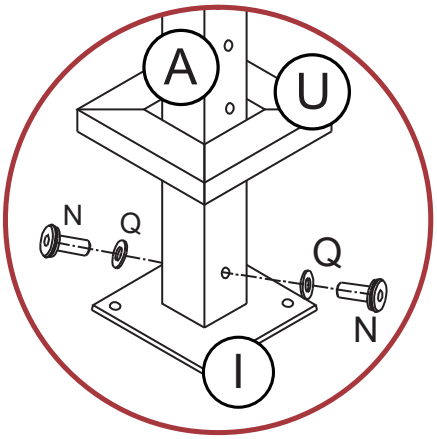

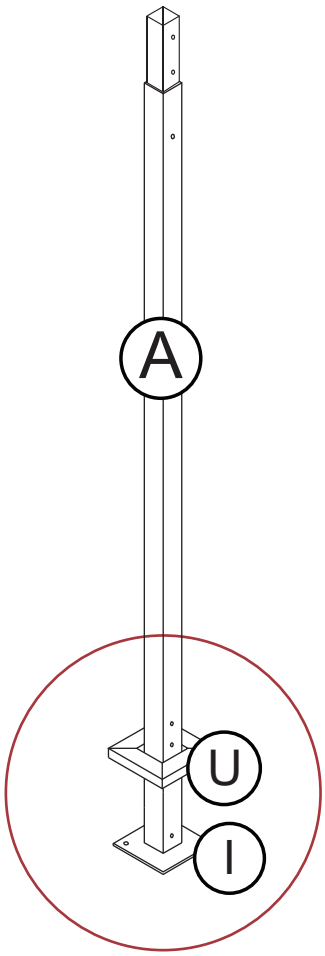

M6*15	N	36
	Q	36

Step 2

X18

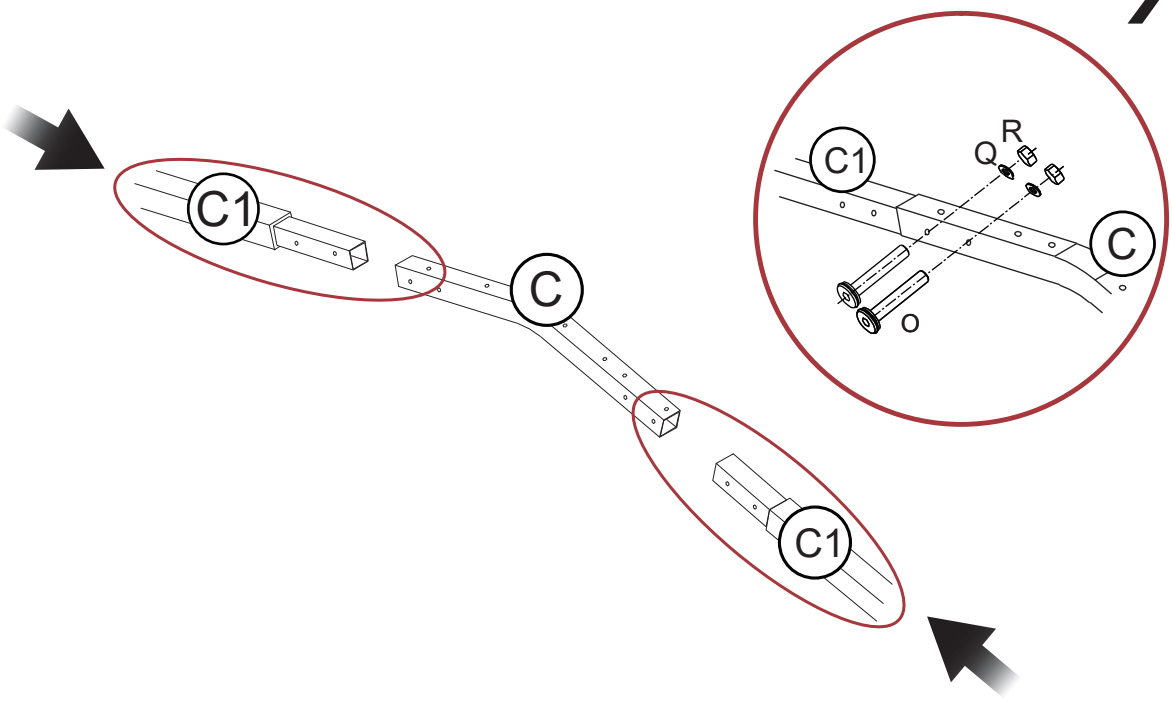

	O	36
	Q	36
	R	36

Step 3

X18

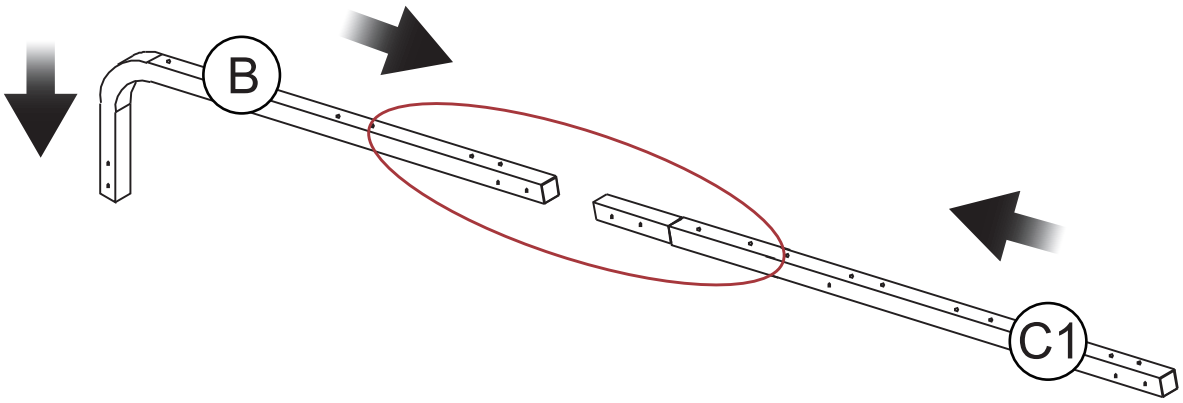

Step 4

X18

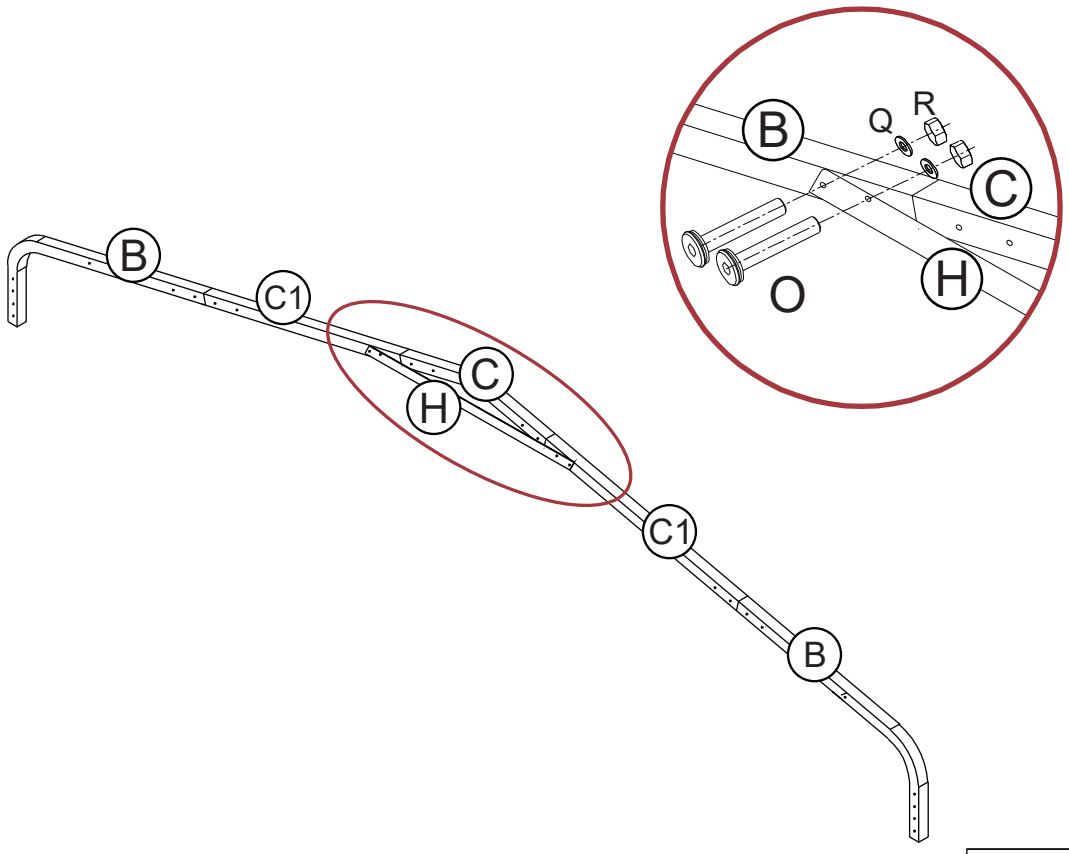

	O	36
	Q	36
	R	36

Step 5

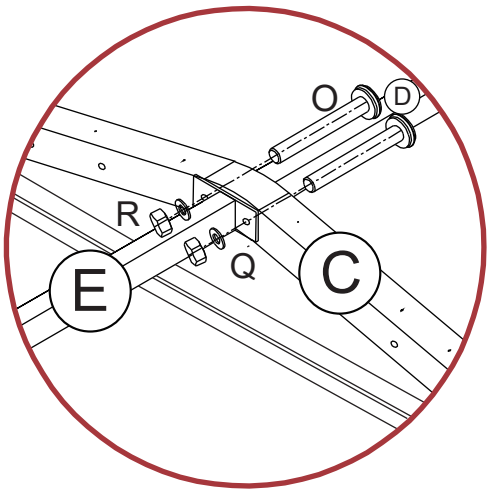

X7

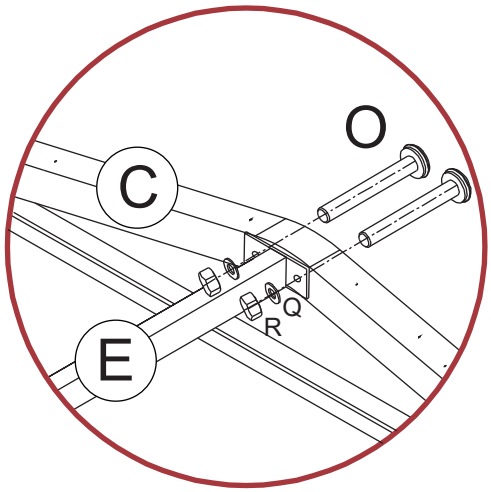

X2

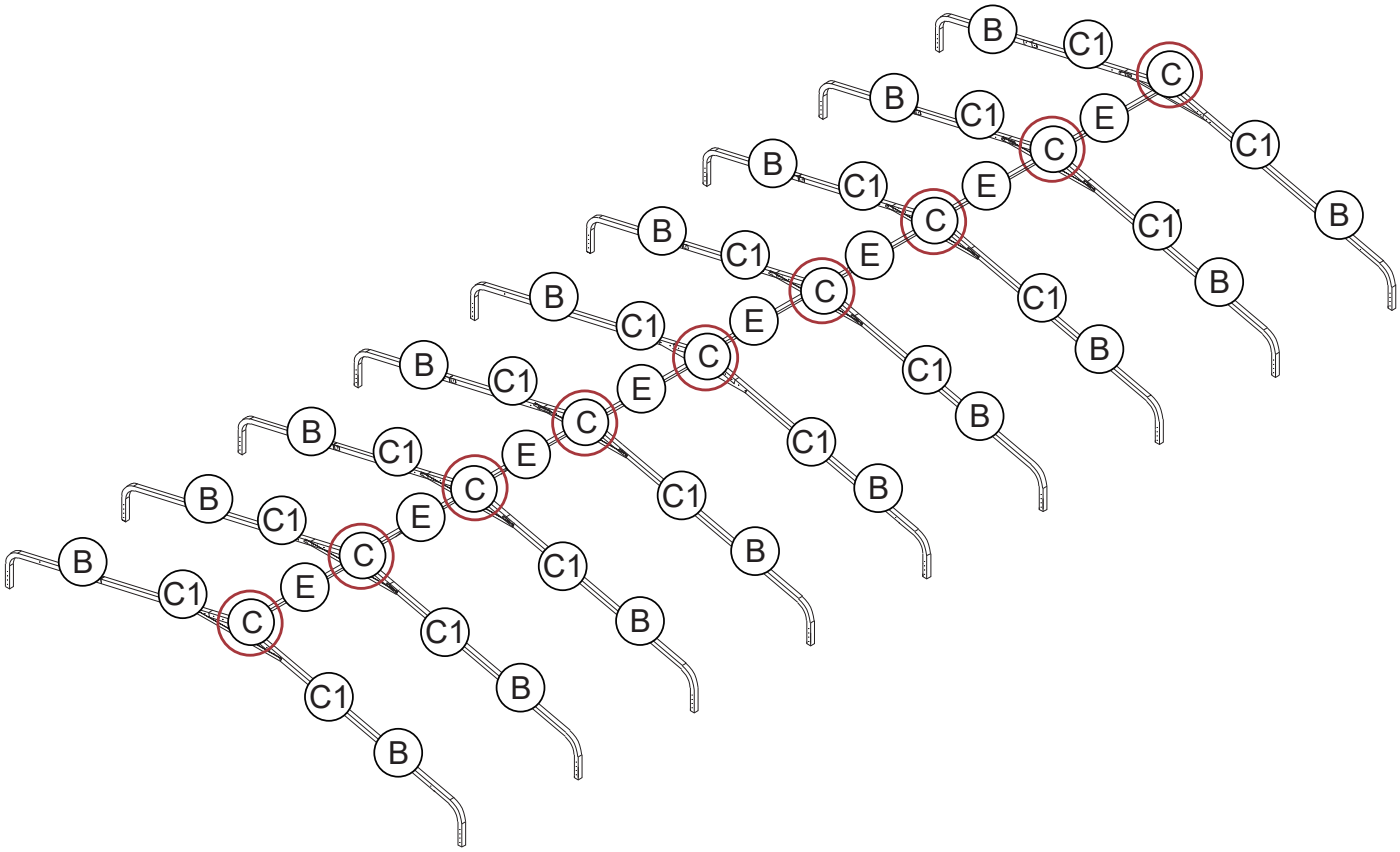

	O	18
	Q	18
	R	18

Step 6

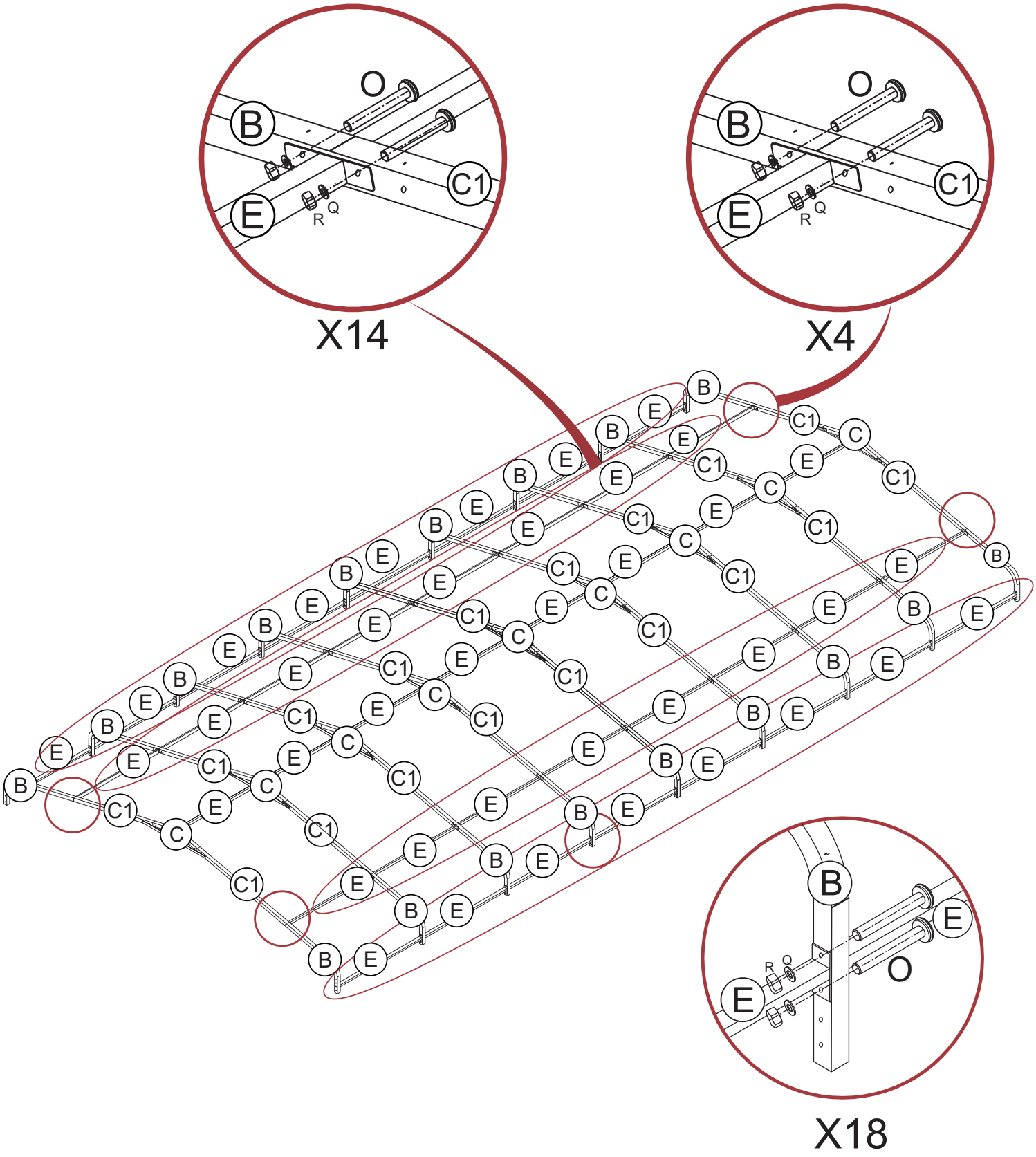

	O	72
	Q	72
	R	72

Step 7

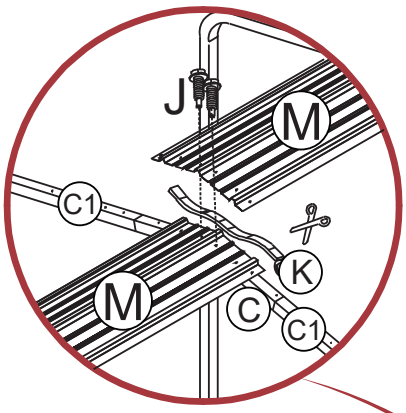

X7

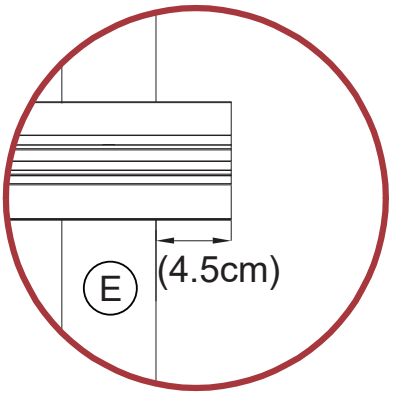

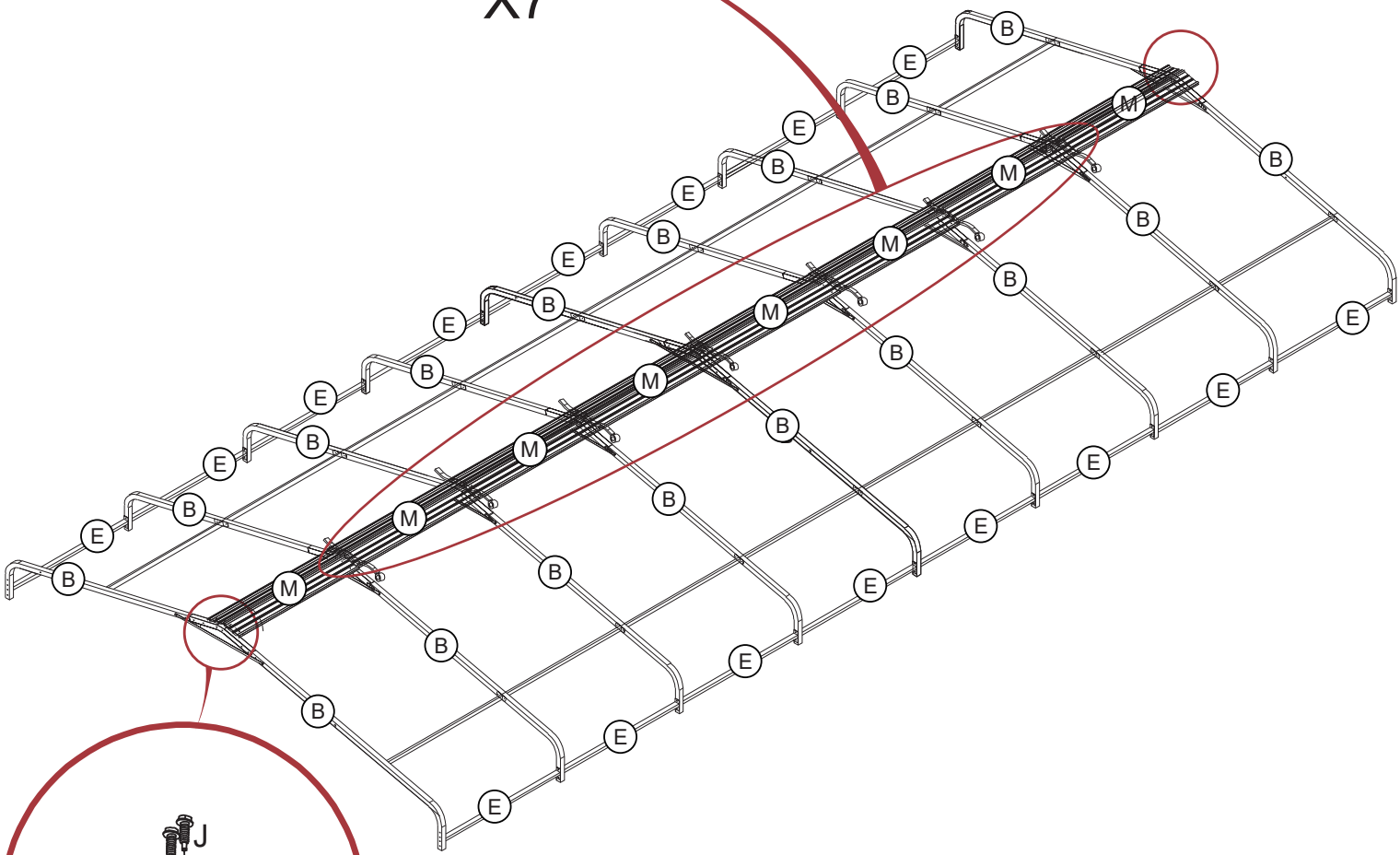

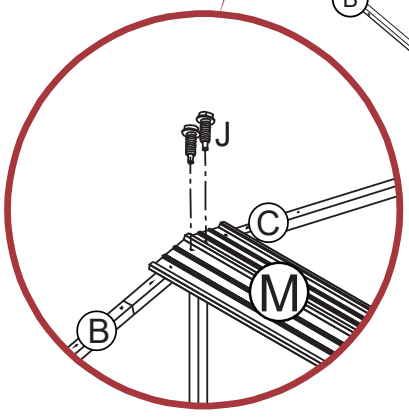

X2

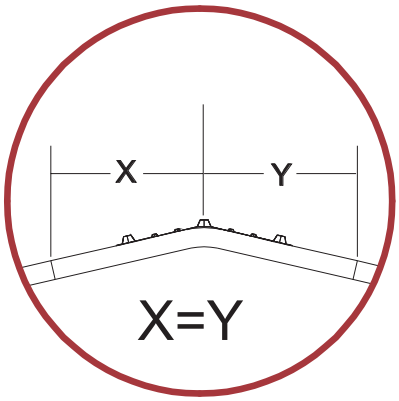

X=Y

	J	18

Step 8

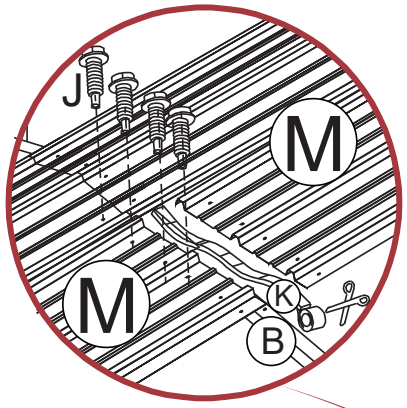

X7

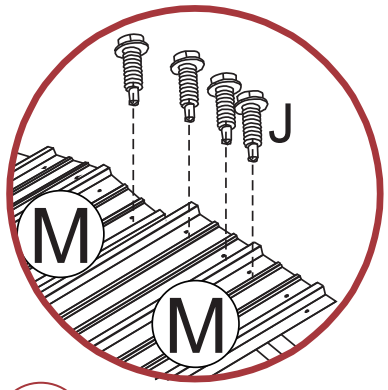

X2

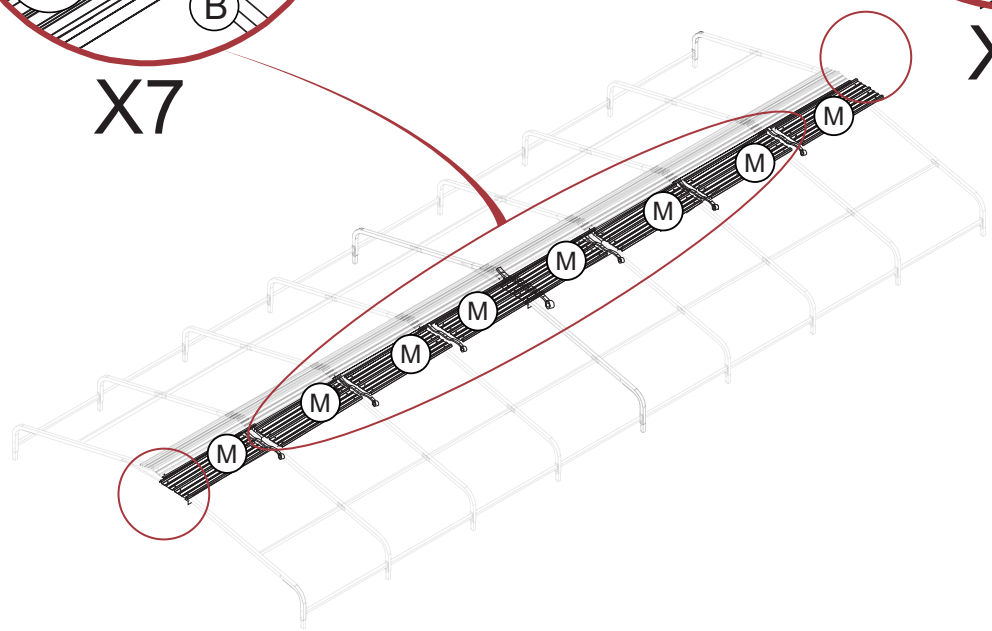

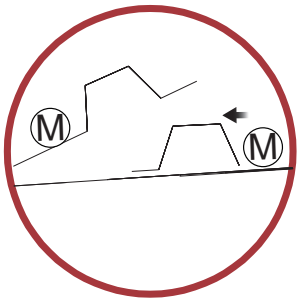

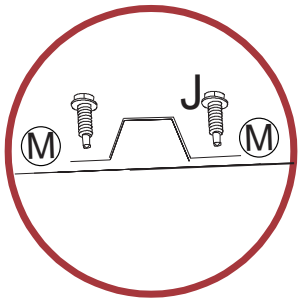

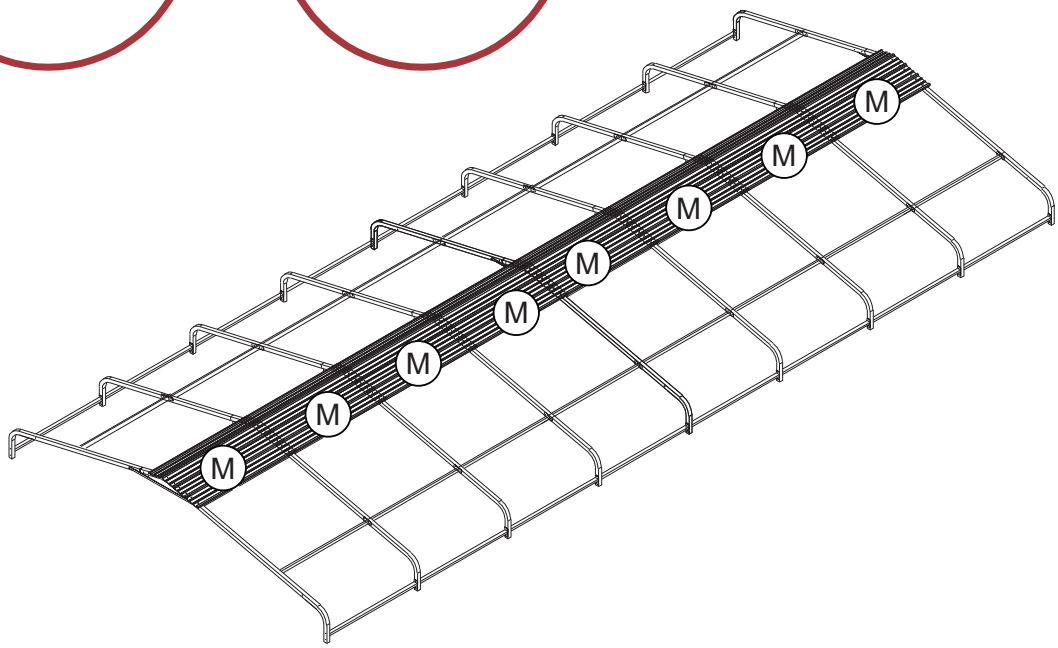

	J	36

Step 9

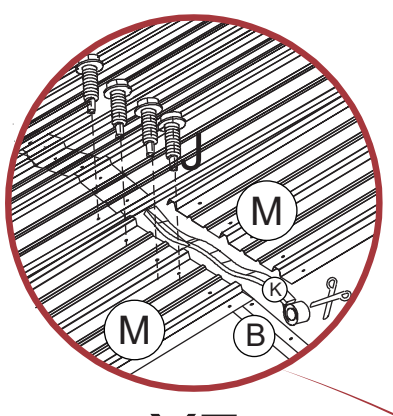

X7

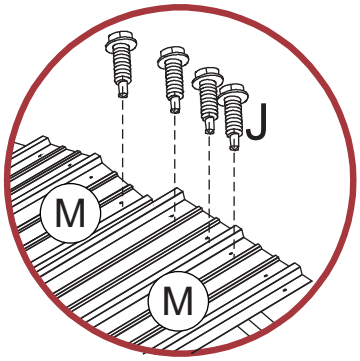

X2

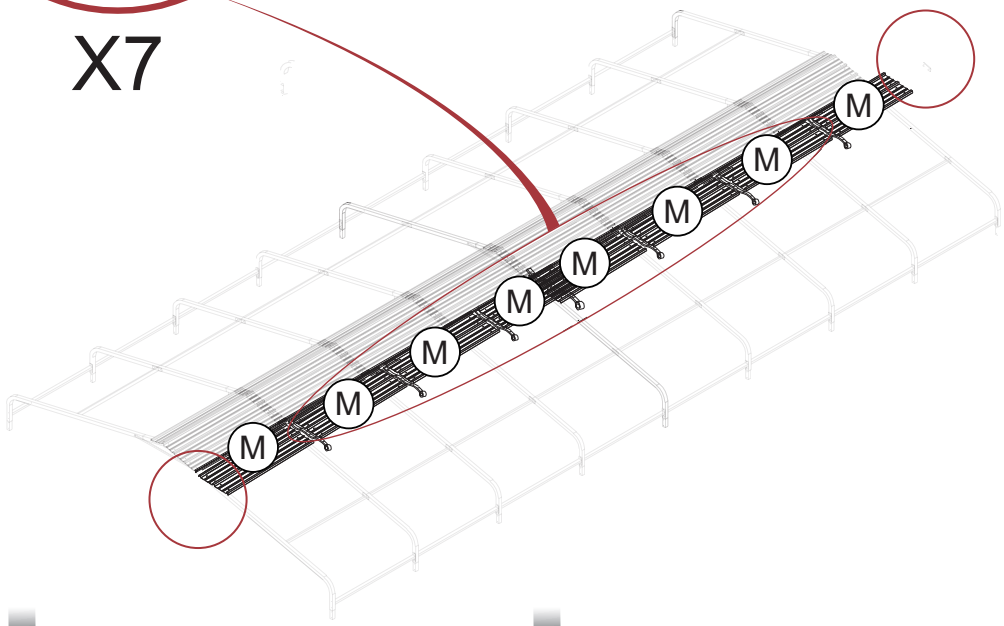

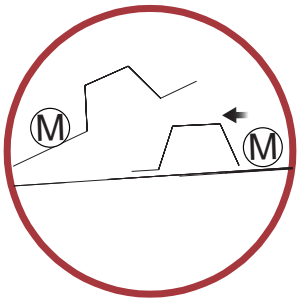

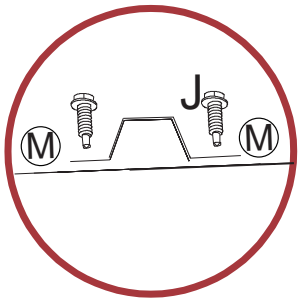

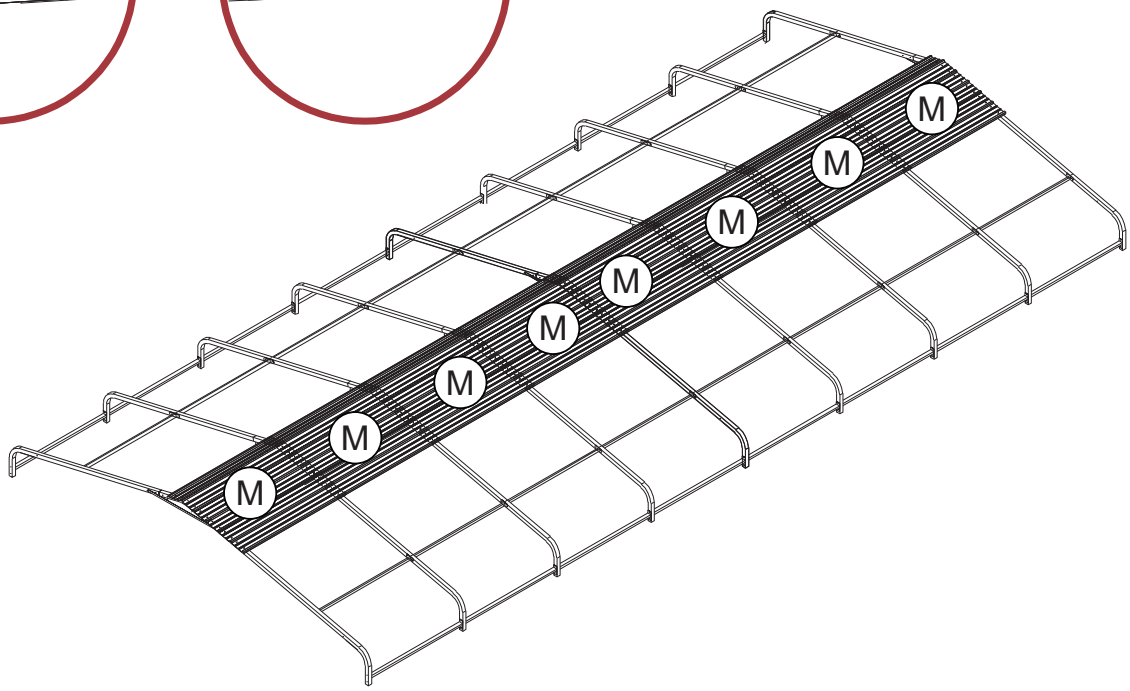

	J	36

Step 10

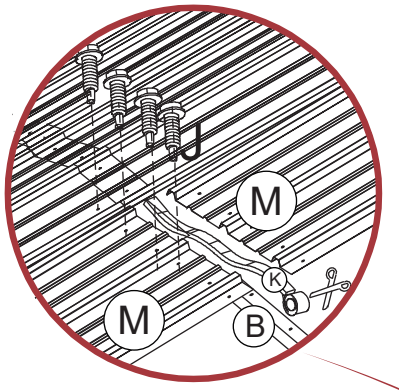

X7

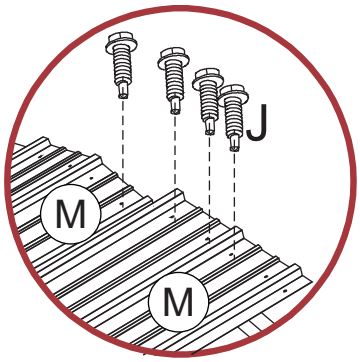

X2

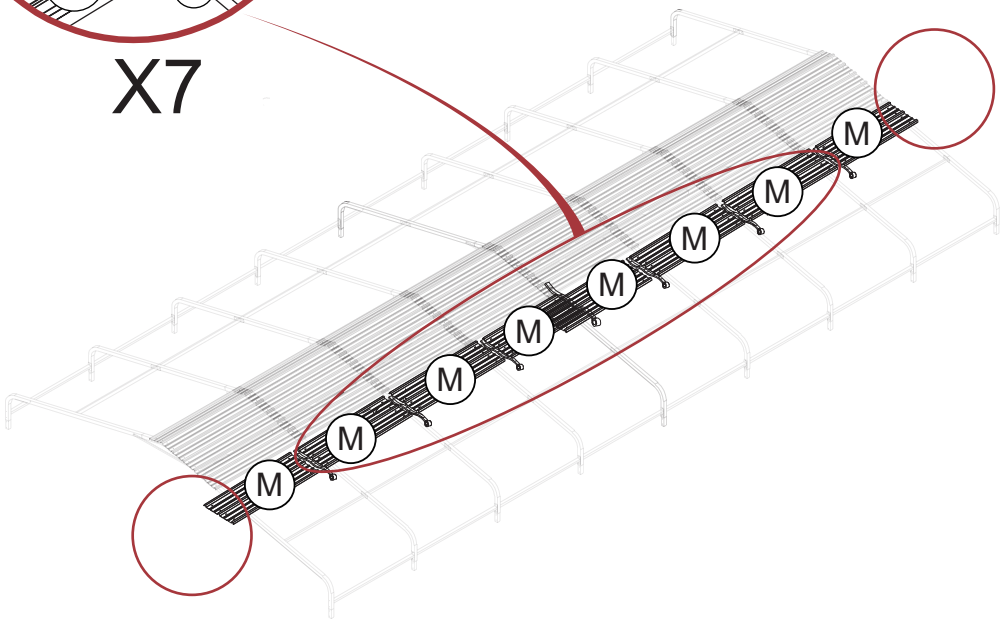

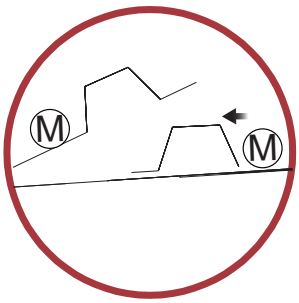

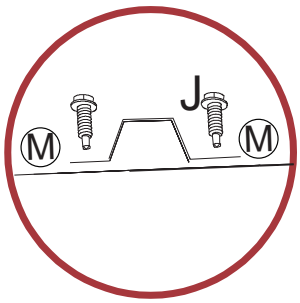

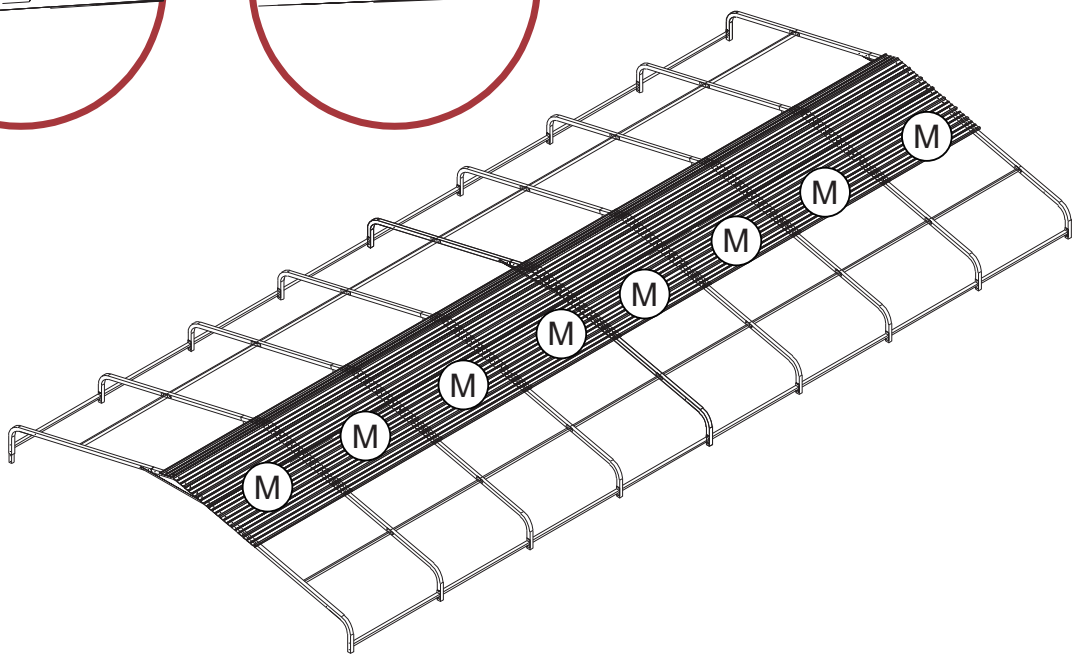

	J	36

Step 11

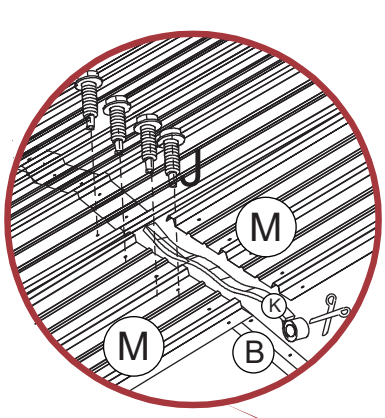

X7

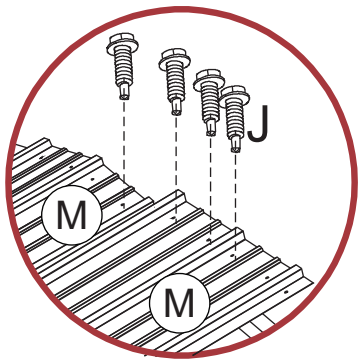

X2

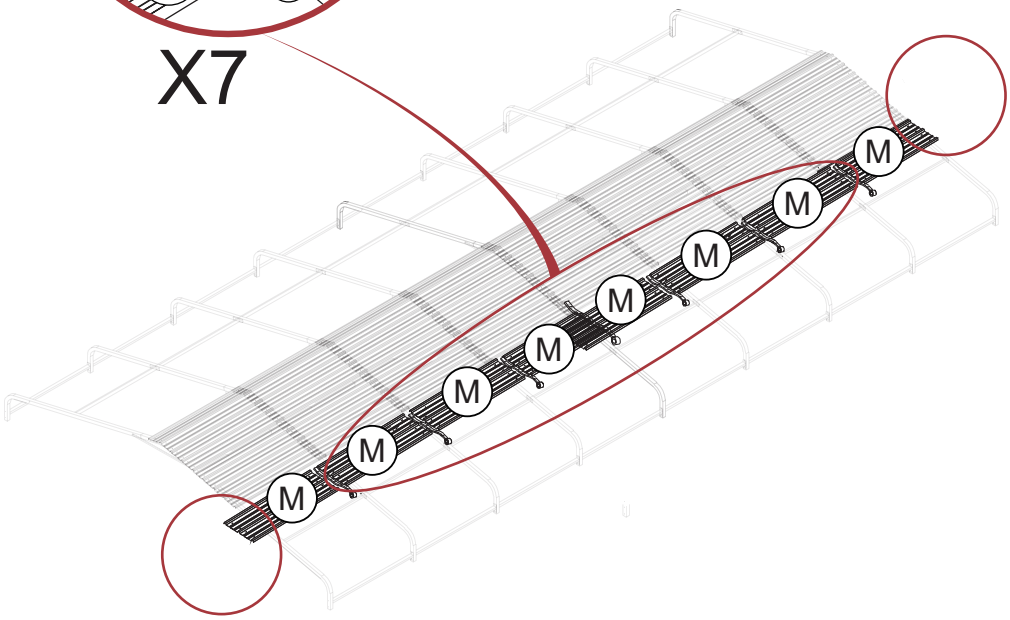

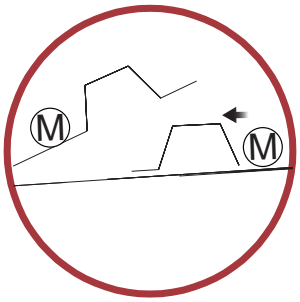

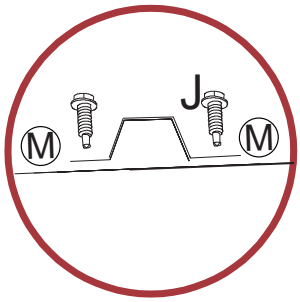

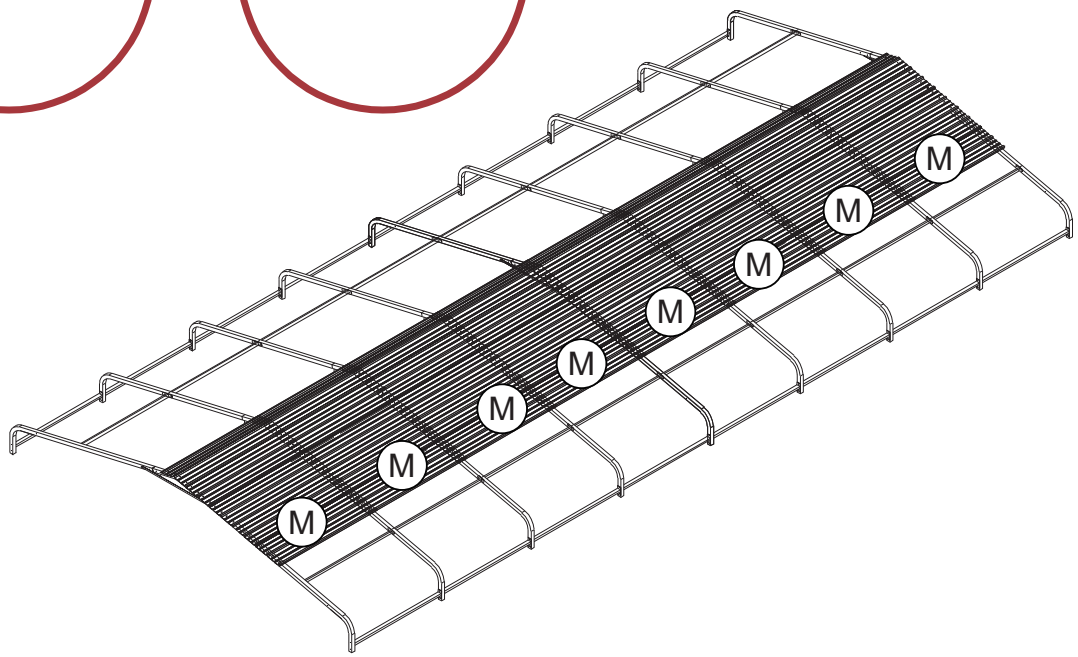

	J	36

Step 12

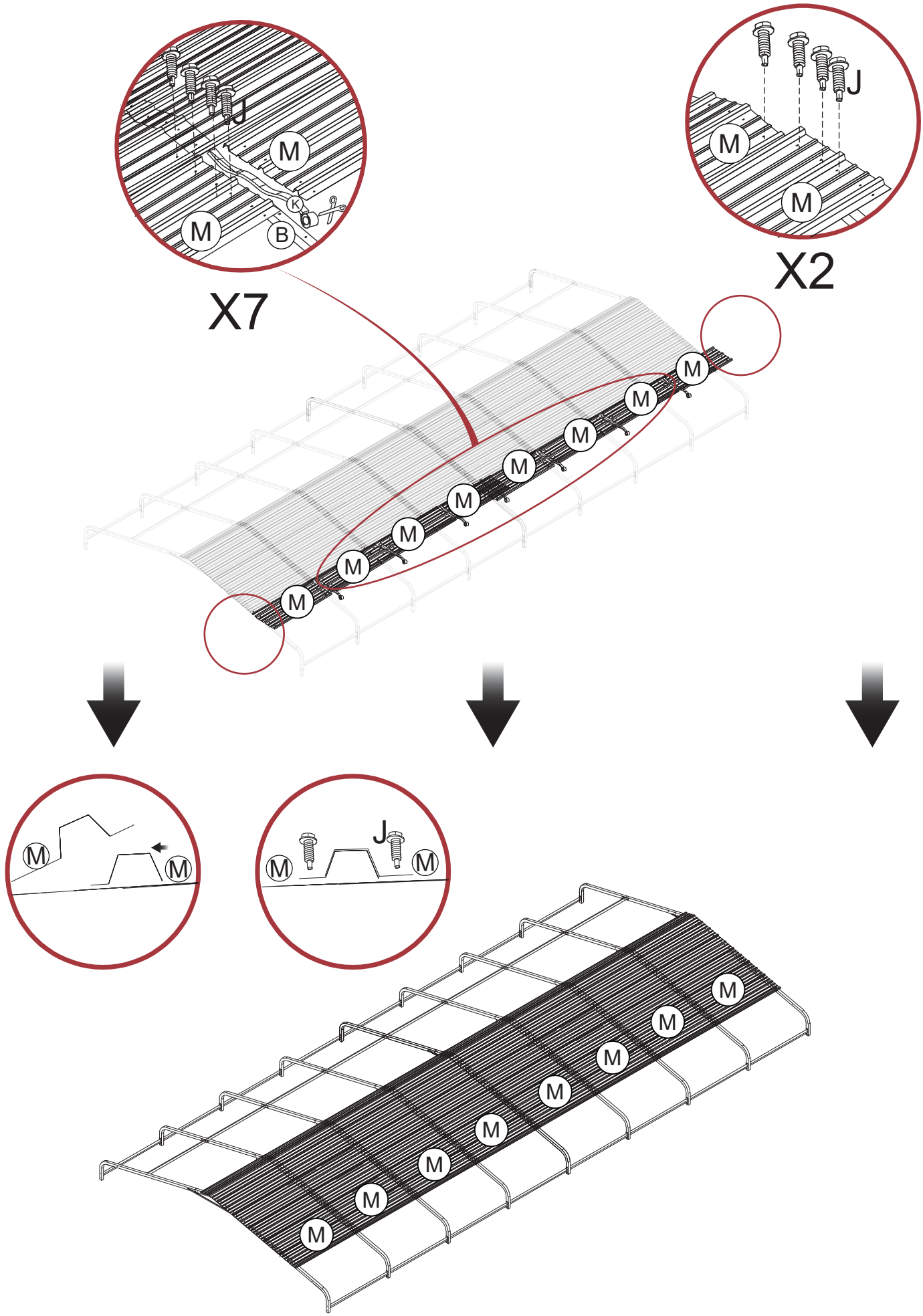

	J	36

Step 13

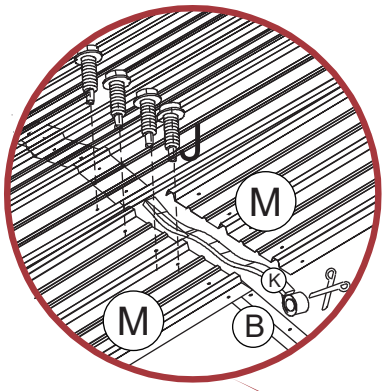

X7

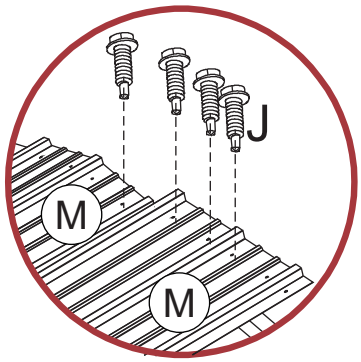

X2

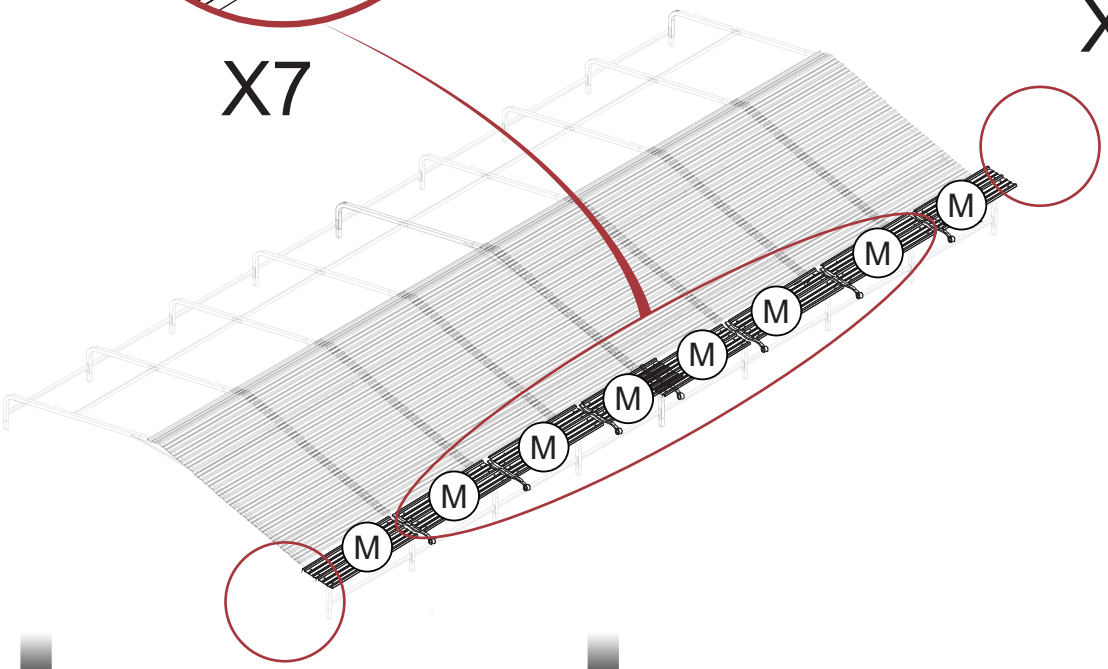

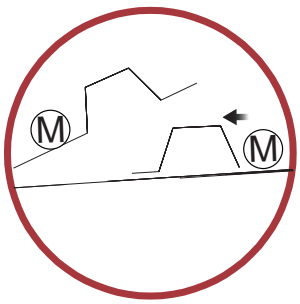

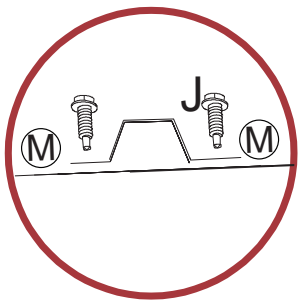

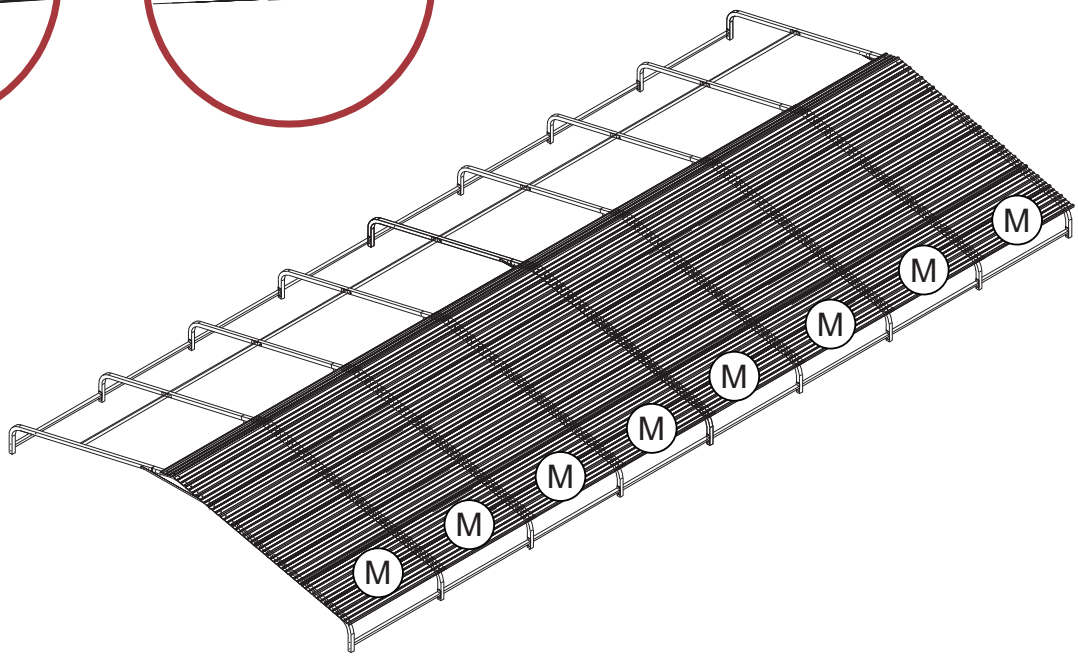

	J	36

Step 14

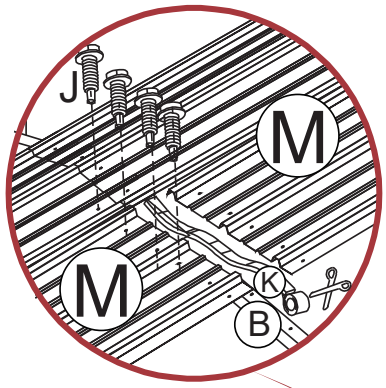

X7

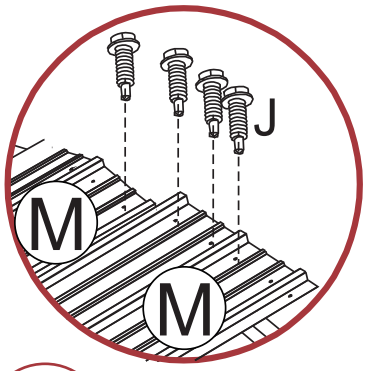

X2

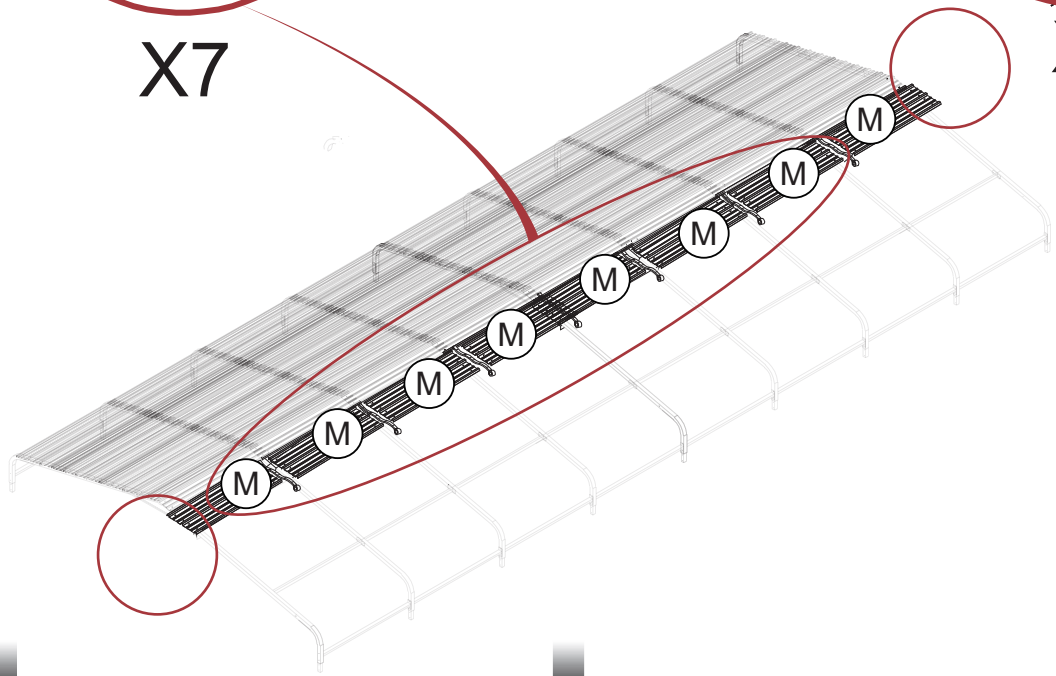

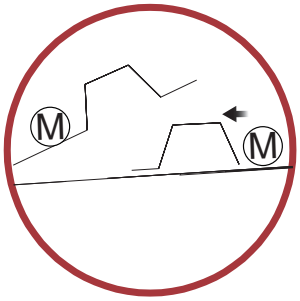

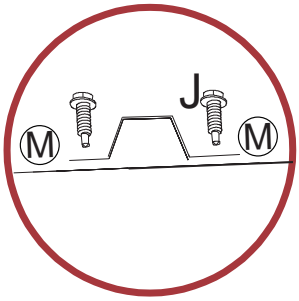

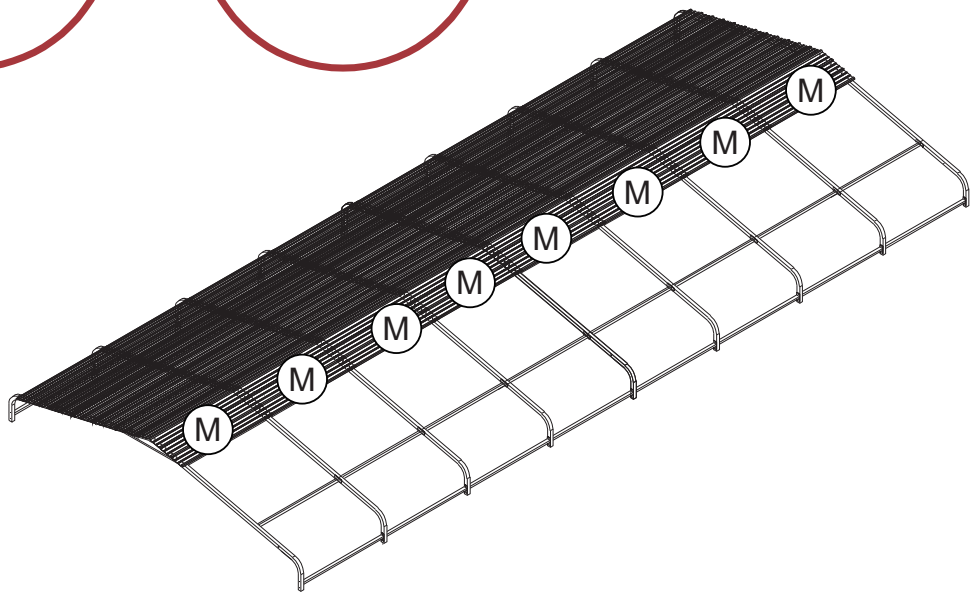

	J	36

Step 15

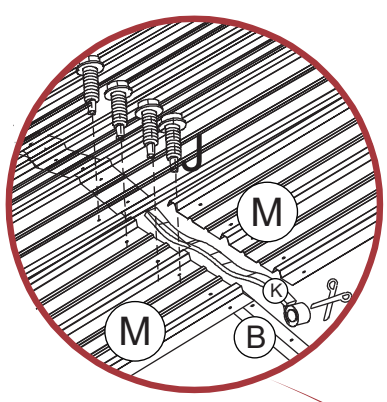

X7

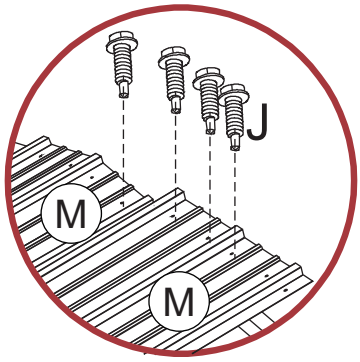

X2

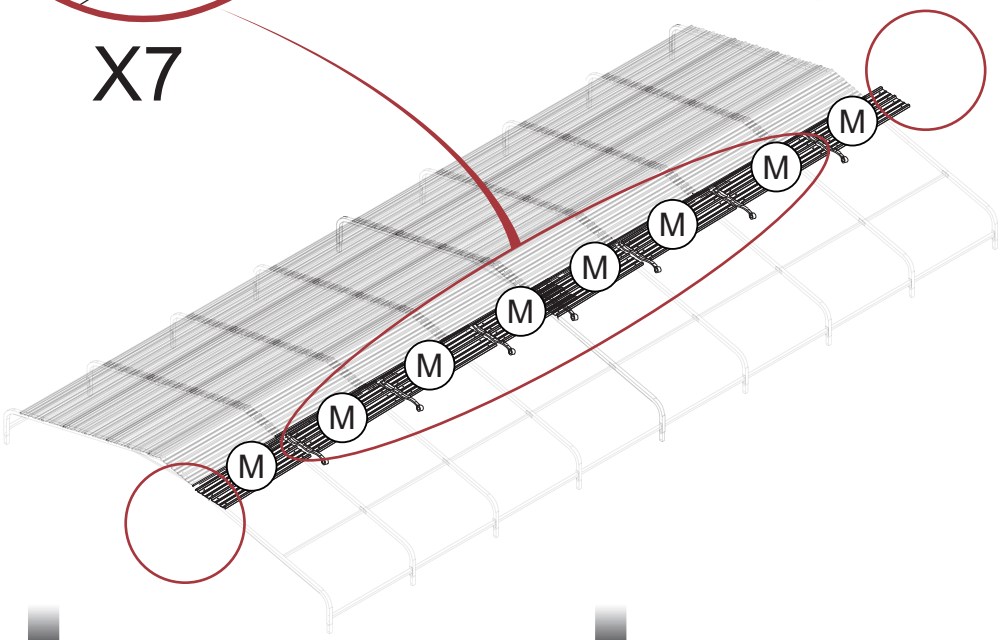

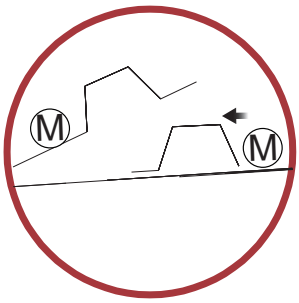

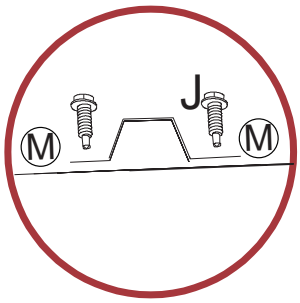

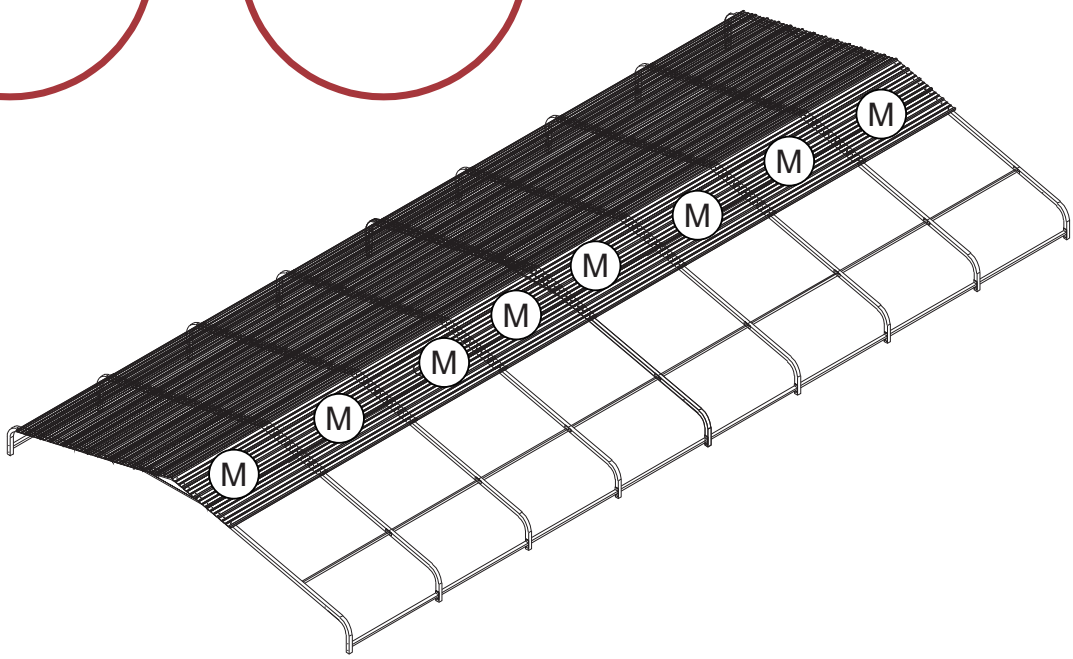

	J	36

Step 16

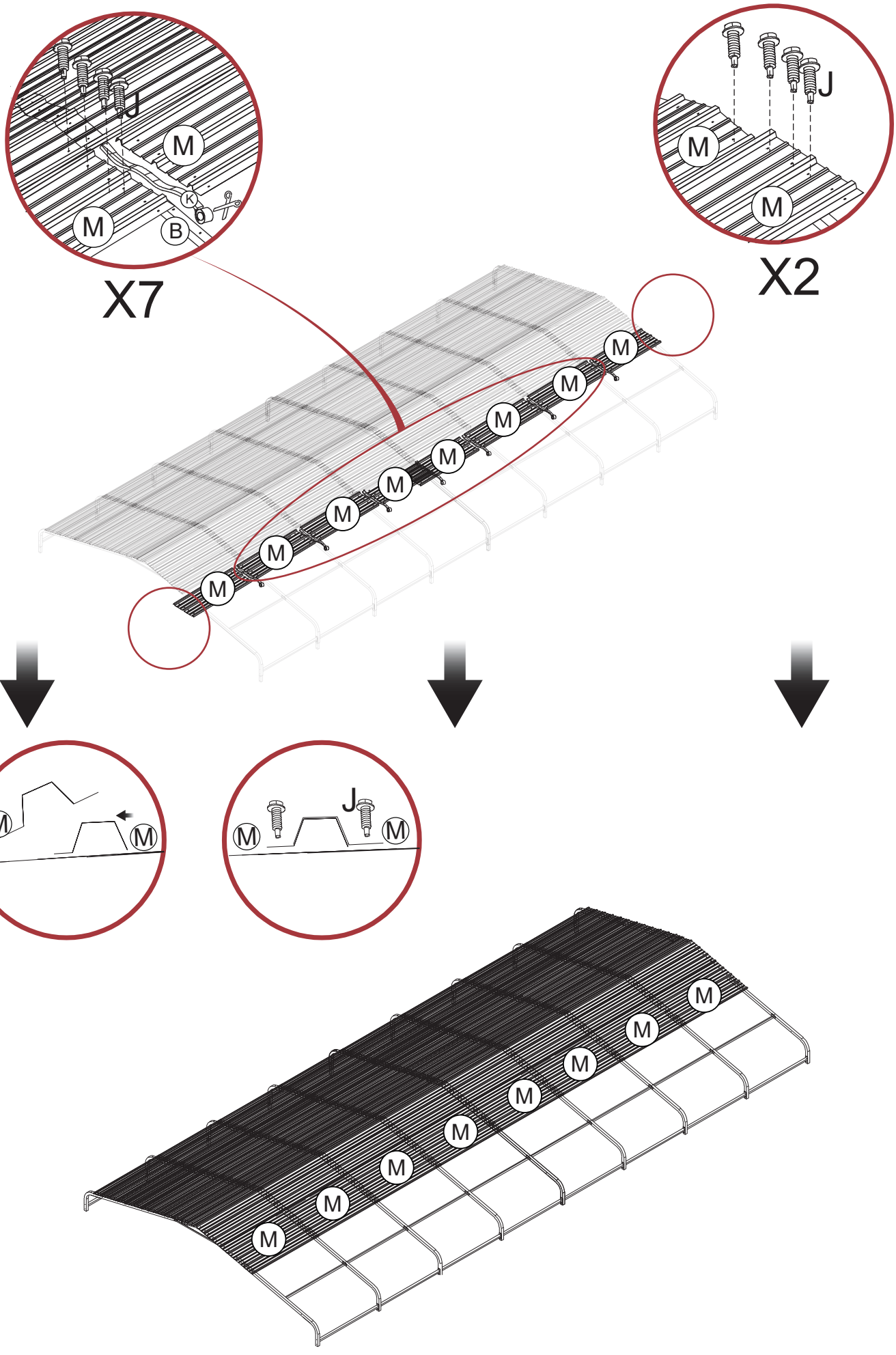

	J	36

Step 17

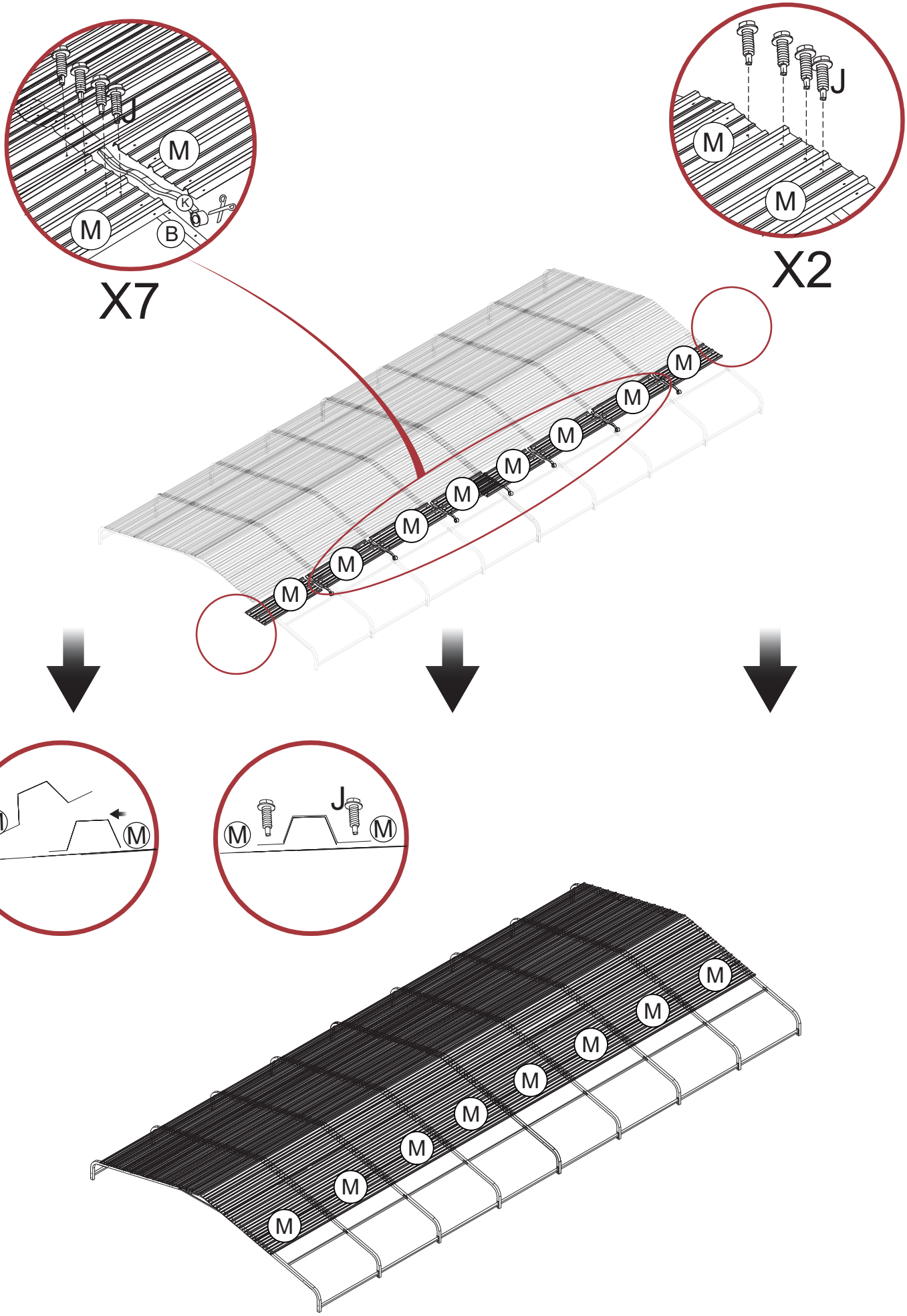

	J	36

Step 18

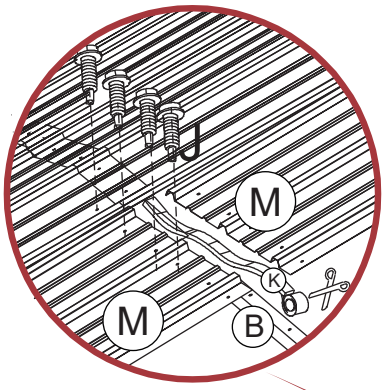

X7

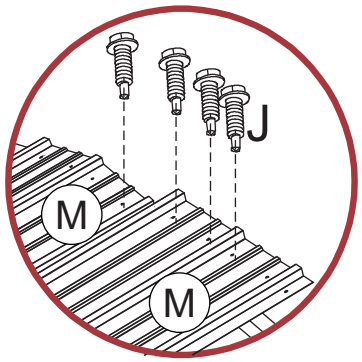

X2

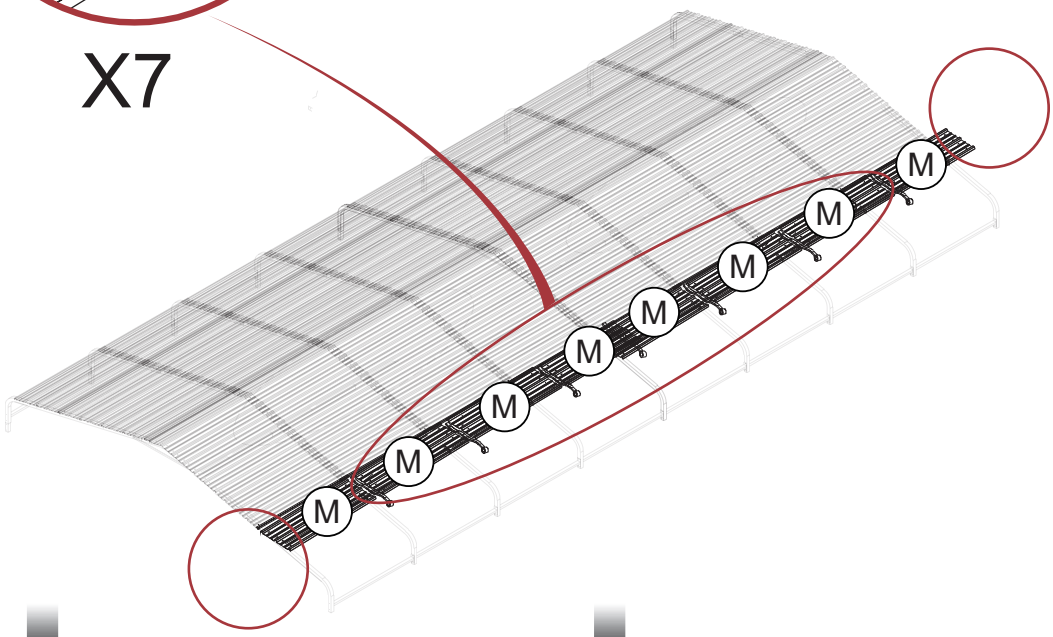

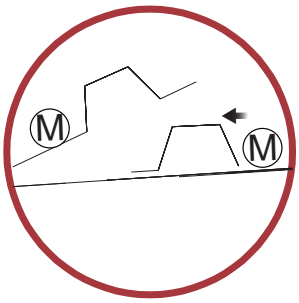

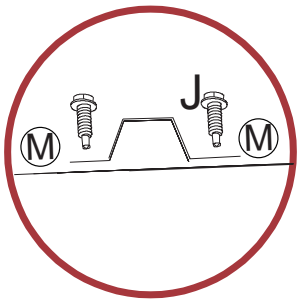

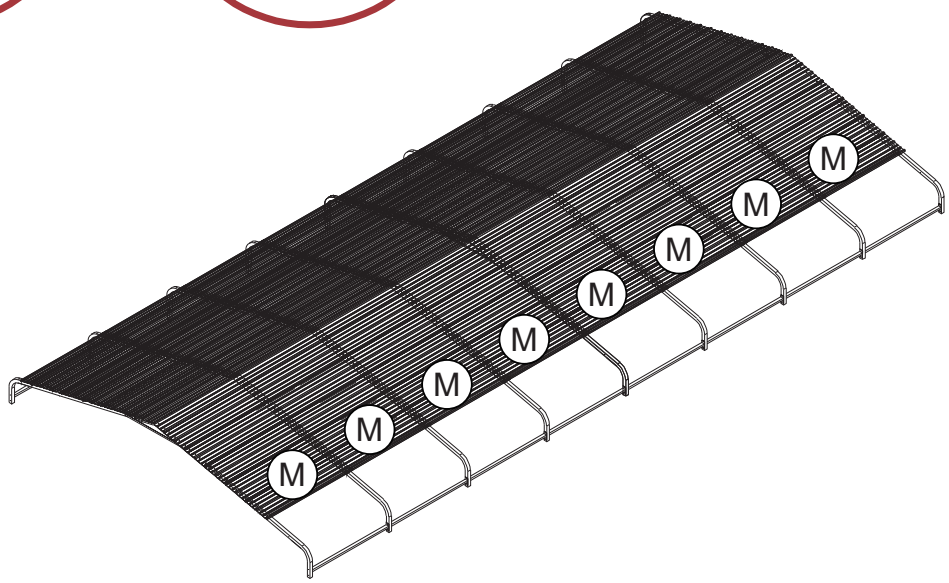

	J	36

Step 19

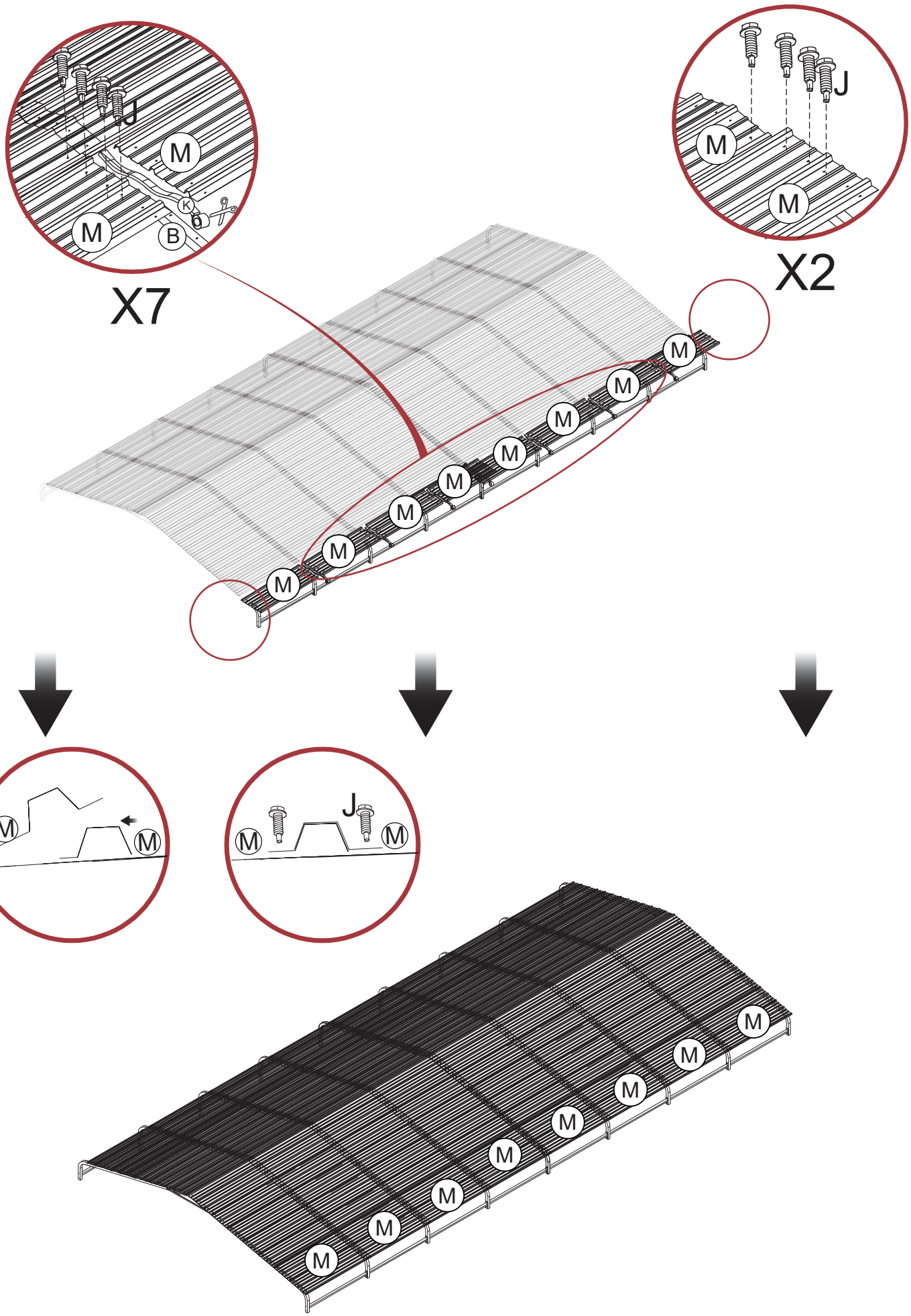

	J	36

Step 20

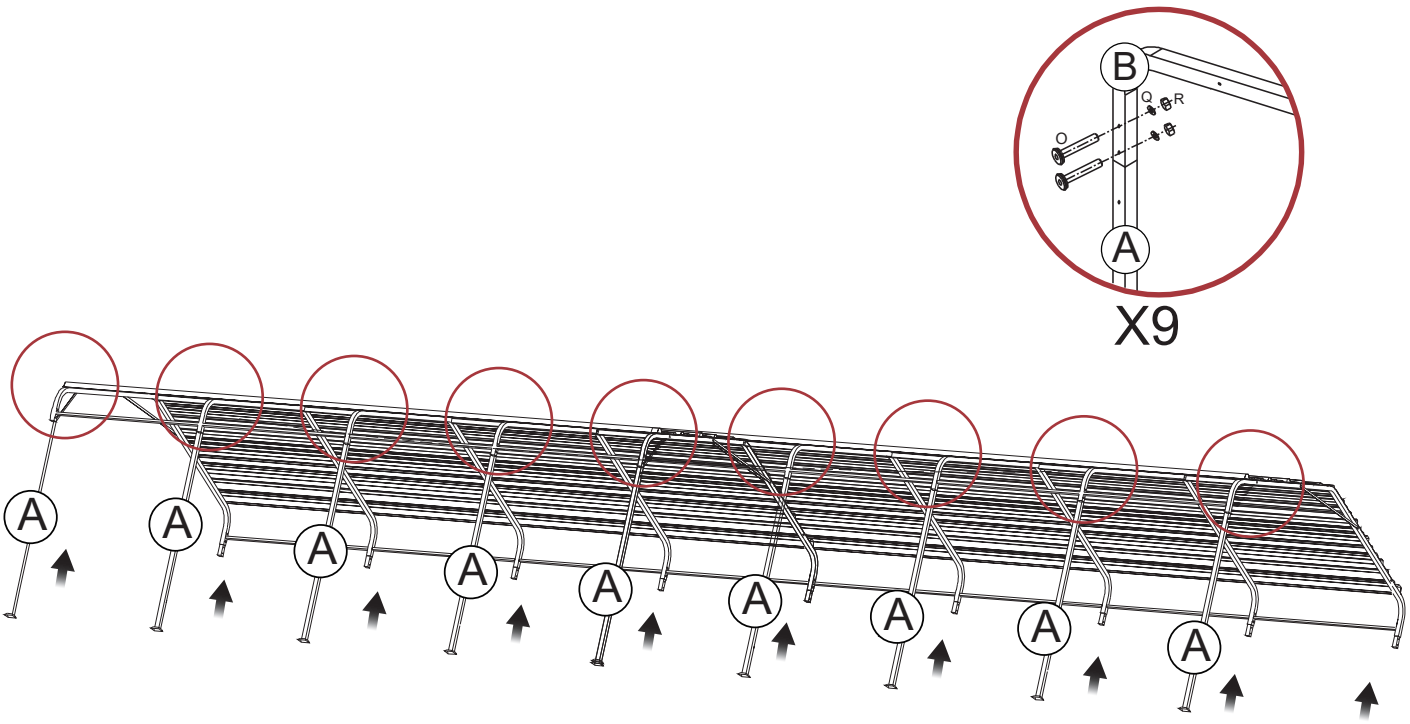

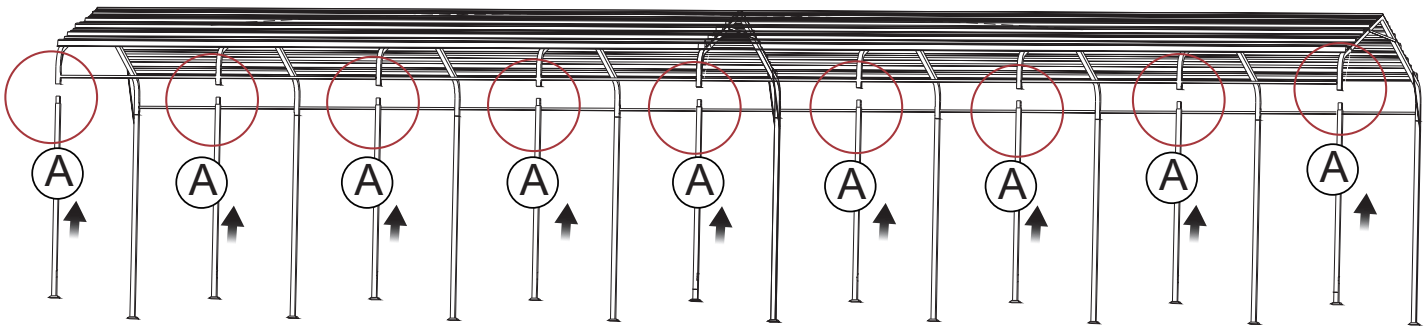

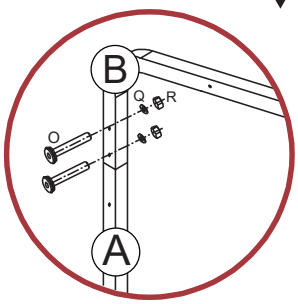

	O	36
	Q	36
	R	36

Step 21

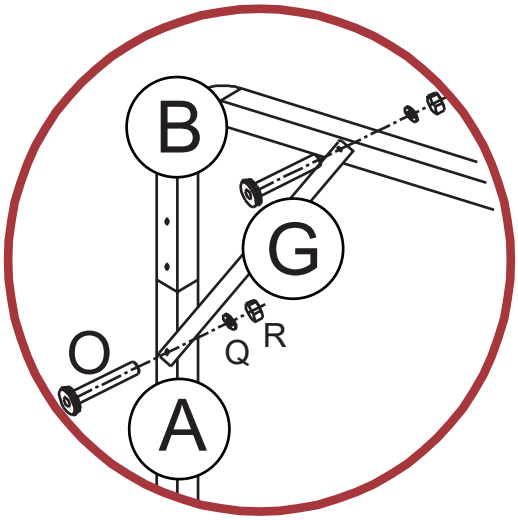

X18

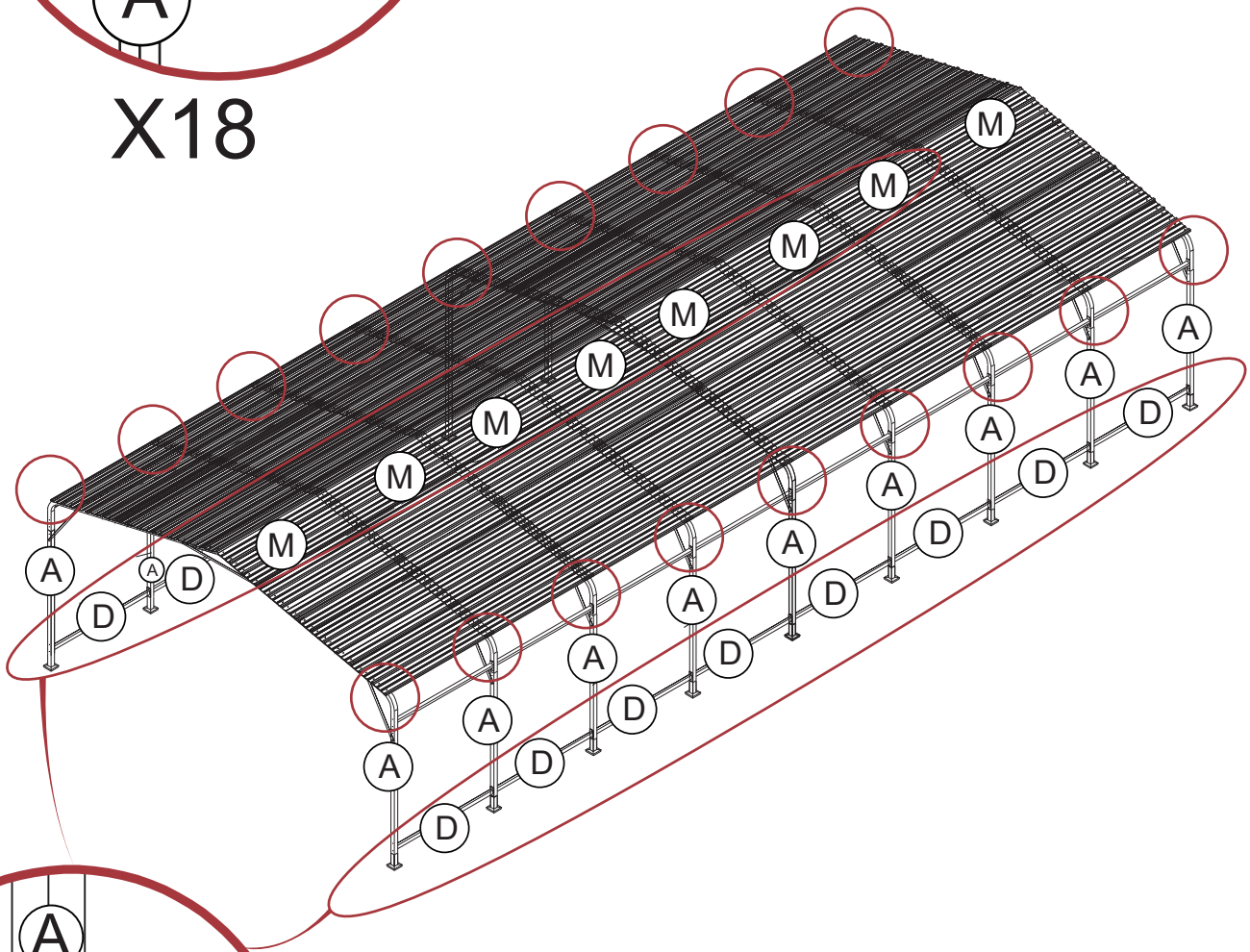

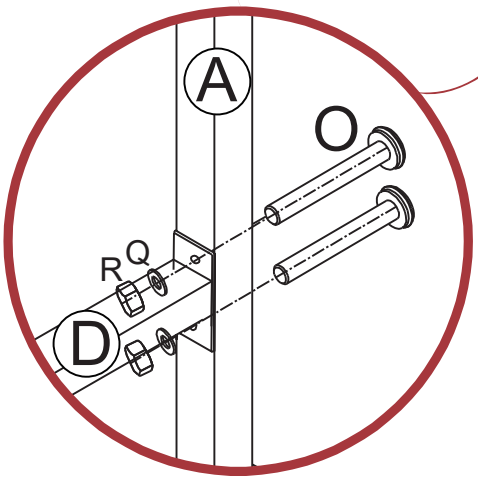

X18

	O	72
	Q	72
	R	72

Step 22

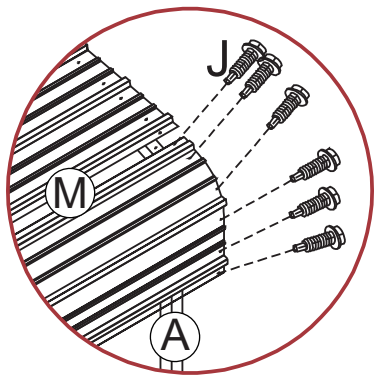

X2

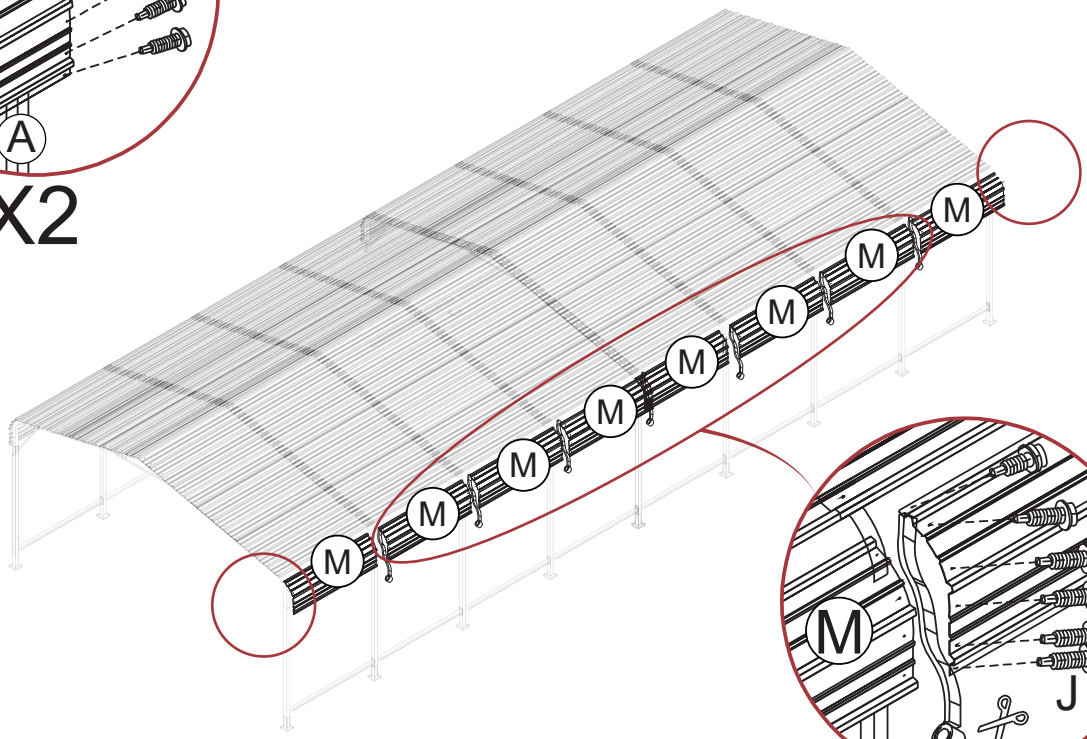

X7

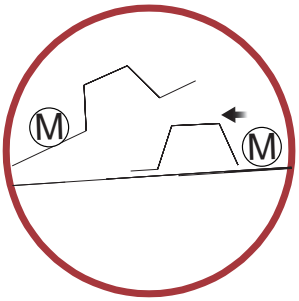

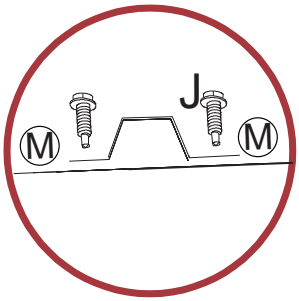

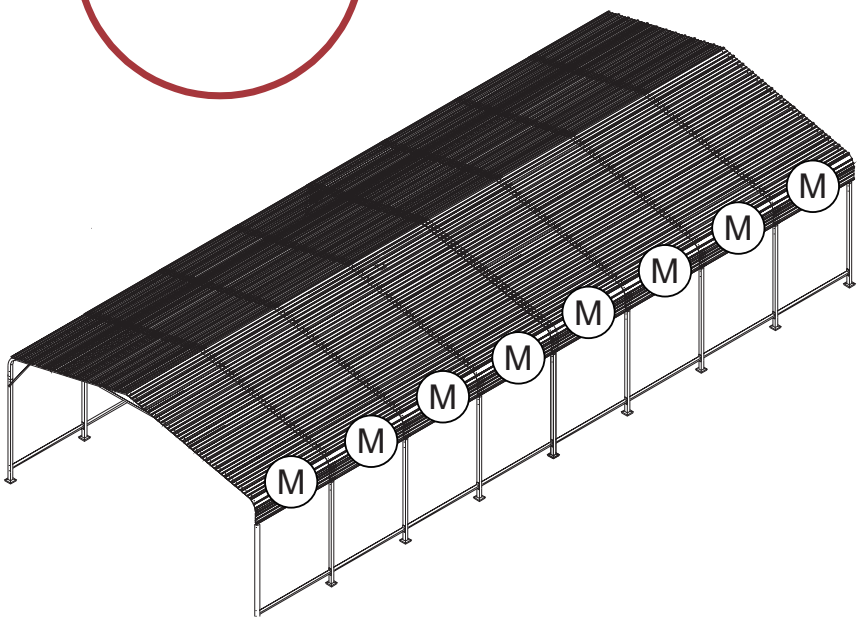

	J	54

Step 23

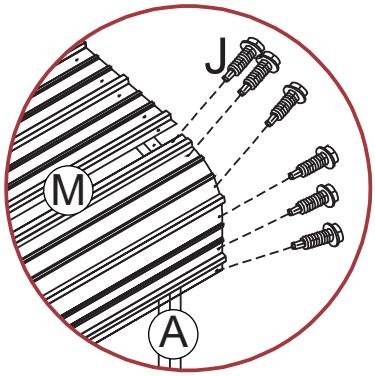

X2

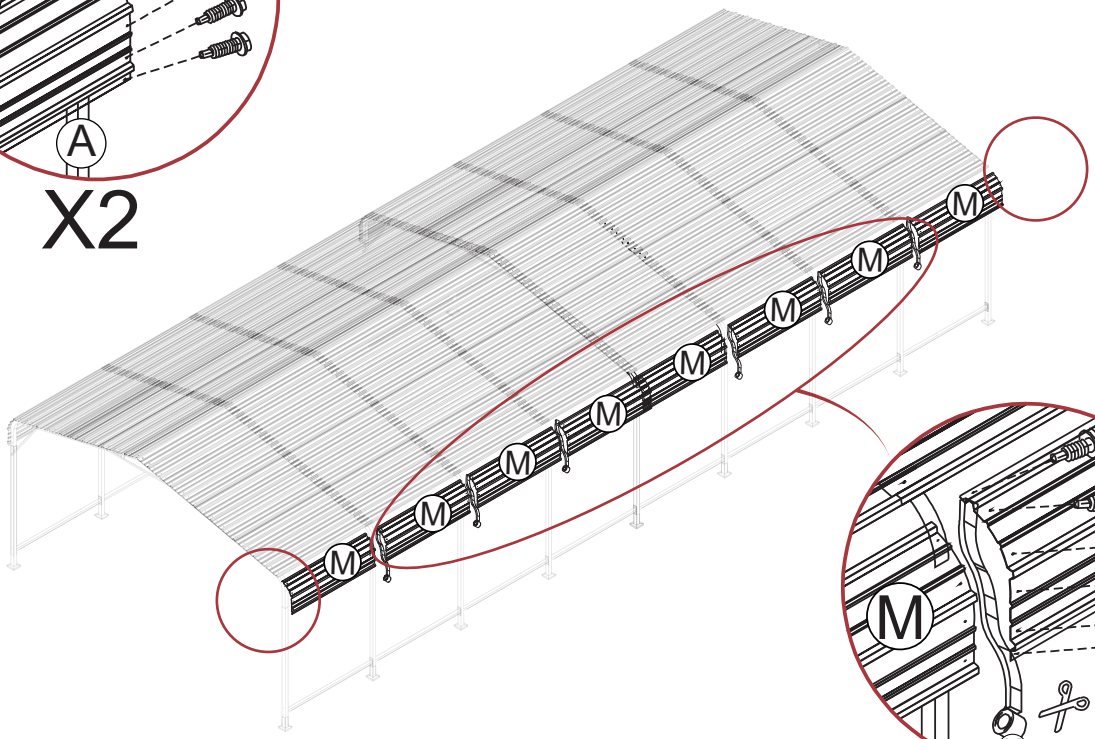

X7

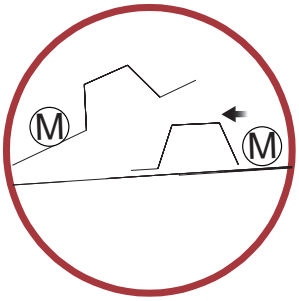

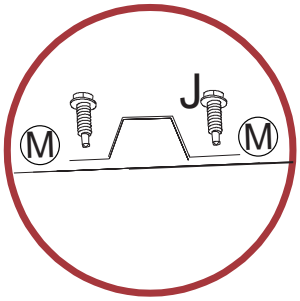

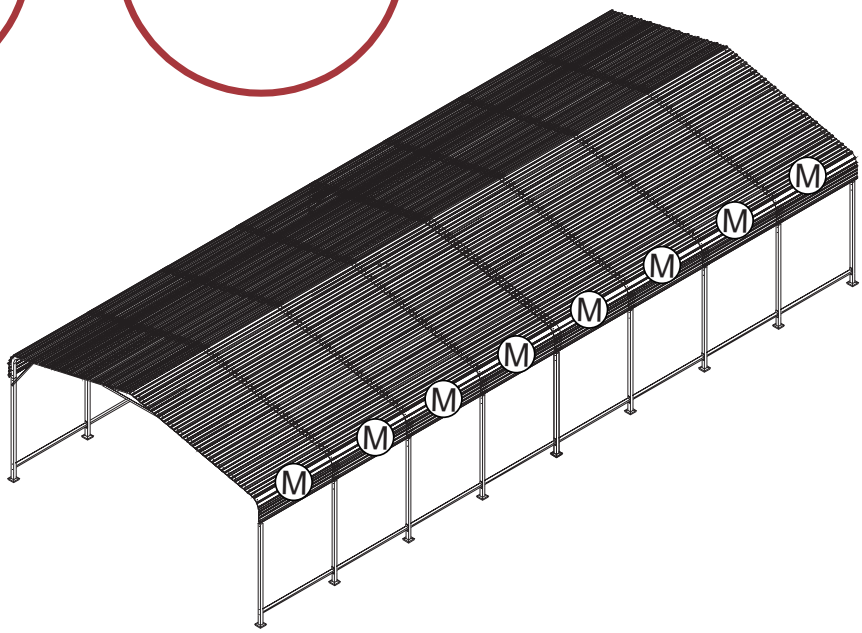

	J	54

Step 24

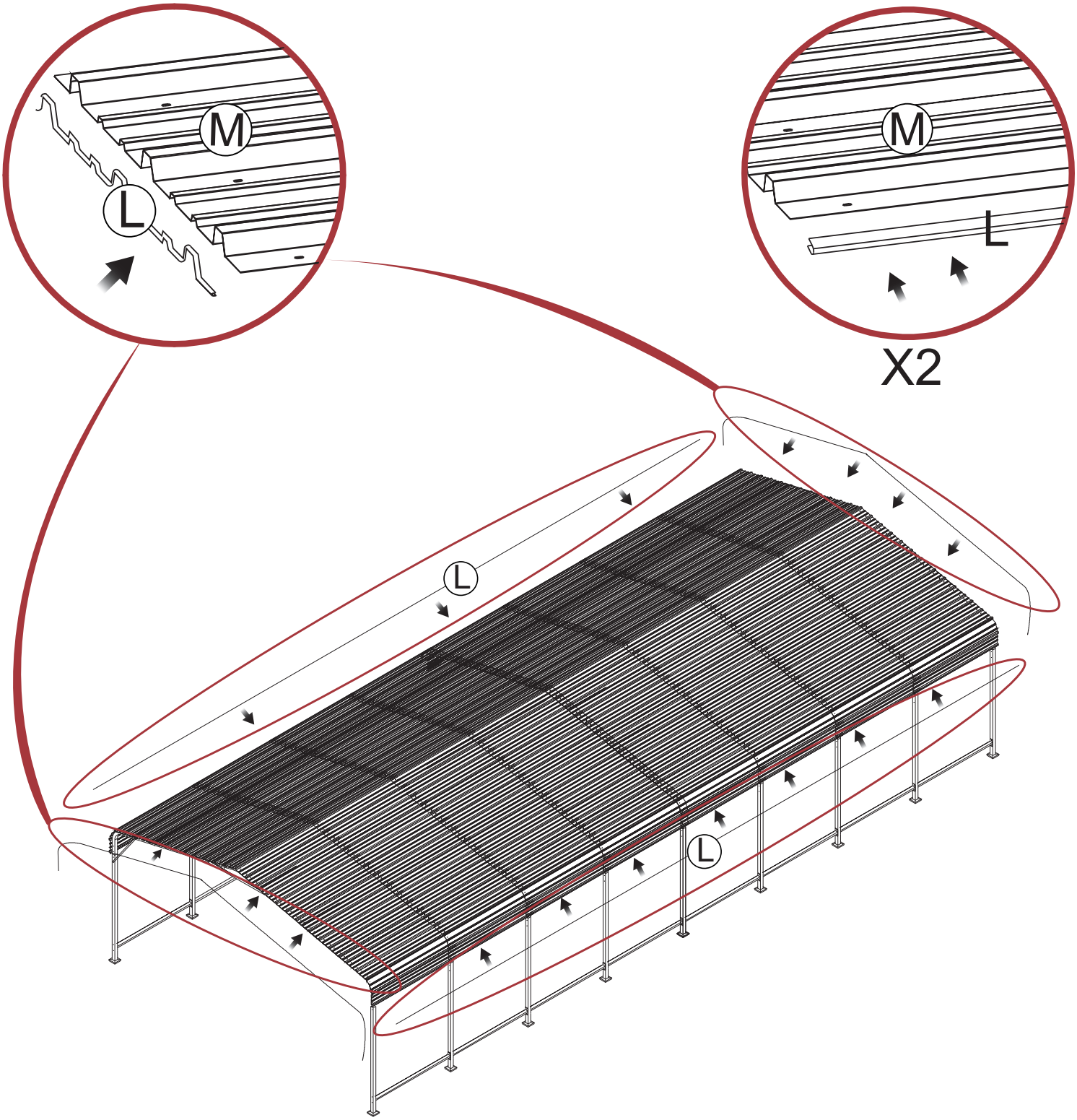

Step 25

For soft ground installations (grass/dirt surfaces)
use the S accessory kit.

For hard surface installations (concrete/wood decking)
the T accessory kit is required.

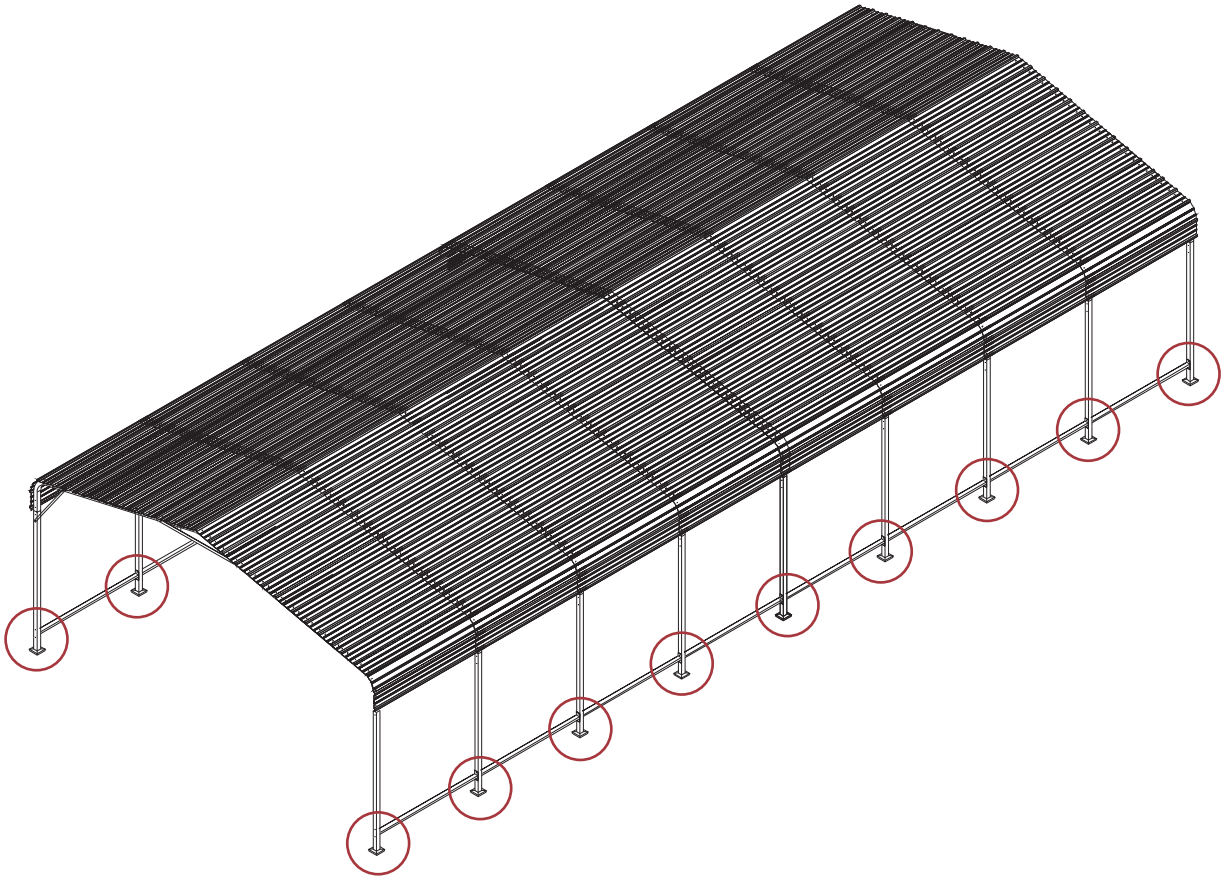

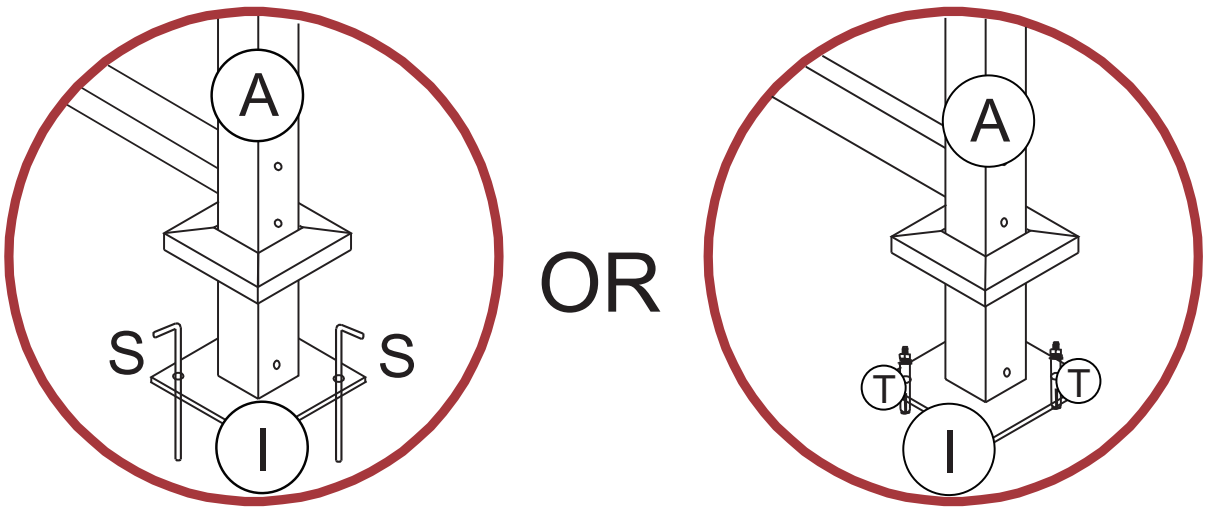

	S	36