PuraFlame

Alice Pro

In Wall Recessed Electric Fireplace

Model Number: (EF671A, EF672A, EF673A, EF675A, EF676A)

OWNER'S MANUAL

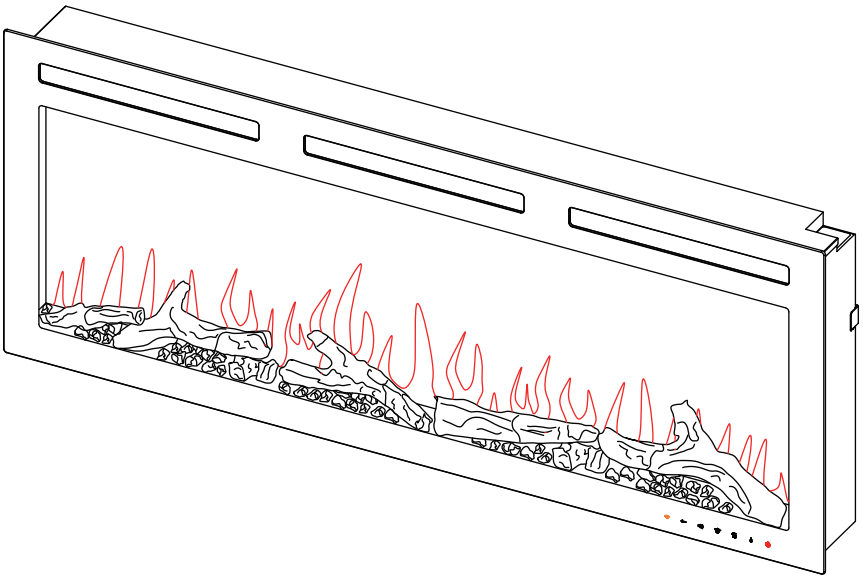

WARNING	**Read and understand** this entire owner's manual, including **all safety information,** before **plugging** in or **using** this product. Failure to do so could result in **fire, electric shock,** or **serious personal injury.**
CAUTION	**Keep this owner's manual** for future reference. If you sell or give this product away, **make sure this manual accompanies this product.**

DO NOT RETURN!

Contact our customer service team for help first.

Email: customerservice@puraflame.com

Call: 909-206-6608

CONTENTS

1. Important Safety Information..... 1
2. Technical Specifications..... 4
3. Before Installation..... 5
4. Installation Instructions..... 7
5. Operation Instructions..... 21
   5a. Manual Control..... 21
   5b. Remote Control..... 23
   5c. App Control..... 25
   5d. Voice Control..... 25
6. Care and Mataintenance..... 26
7. Limited Warranty..... 27
8. Schematic Diagram..... 28

1. IMPORTANT SAFETY INFORMATION

When using electrical appliances, basic precautions should always be followed to reduce the risk of fire, electric shock, and injury to persons, including the following:

- **Read all instructions before installing or using this heater.**
- This heater is **hot when in use.** To avoid burns, **do not** let bare skin touch hot surfaces. **Keep combustible materials,** such as furniture, pillows, bedding, papers, clothes, etc. and curtains **at least 0.9 m** from the front of the heater and keep them **away from the sides and rear.**
- **Extreme caution** is necessary when any heater is used by or near children or invalids and whenever the heater is left **operating and unattended.**
- **Do not** operate any heater after it malfunctions. Disconnect power at service panel and have heater inspected by a reputable electrician before reusing.
- **Do not** use **outdoors.**
- To disconnect heater, **turn controls to off,** and turn off power to heater circuit at main disconnect panel (or operate internal disconnect switch if provided).
- **Do not insert** or **allow foreign objects** to **enter any ventilation or exhaust opening** as this may cause an **electric shock** or fire, or **damage the heater.**
- To prevent a possible fire, **do not** block air intakes or exhaust in any manner.
- A heater has **hot** and **arcing** or **sparking** parts inside. **Do not use** it in areas where **gasoline, paint, or flammable vapors** or liquids are used or stored.
- Use this heater **only** as described in this manual. Any other use **not recommended** by the manufacturer may cause fire, **electric shock,** or injury to persons.
- This heater may include an audible or visual **alarm** to **warn** that parts of the heater are **getting excessively hot.** If the alarm sounds (or illuminates), **immediately** turn the heater off and inspect for any objects on or adjacent to the heater that may have blocked the airflow or otherwise caused high temperatures to have occurred. **DO NOT OPERATE THE HEATER WITH THE ALARM SOUNDING (OR ILLUMINATING).**

- **Risk of electric shock! DO NOT OPEN!** No user-serviceable parts inside!
- **Never modify this appliance.** Doing so could result in personal injury or property damage. Modification of this fireplace **completely voids all warranties.**
- **Always** turn this appliance off before unplugging it from the outlet.
- **Always use** properly grounded, **fused** and polarized outlet.
- **Never** plug this appliance into an outlet that is **old, cracked,** or has any **loose wires or connection.** Plugging this appliance into a faulty outlet could result in **electric arcing** within the outlet that could cause the **outlet** to **overheat or catch fire.**
- **DO NOT** run **power cord** under carpeting. **DO NOT** cover power cord with throw rugs, runners, or similar coverings. **DO NOT** route power cord under furniture or appliances. Arrange power cord **away from traffic** area, and where it will not be tripped over.

This heater is for use on 120 volts. The cord has a plug as shown at A in Figure below. An adapter as shown at C is available for connecting three-blade grounding-type plugs to two-slot receptacles. The green grounding lug extending from the adapter must be connected to a permanent ground such as a properly grounded outlet box. The adapter should not be used if a three-slot grounded receptacle is available.

Grounding methods

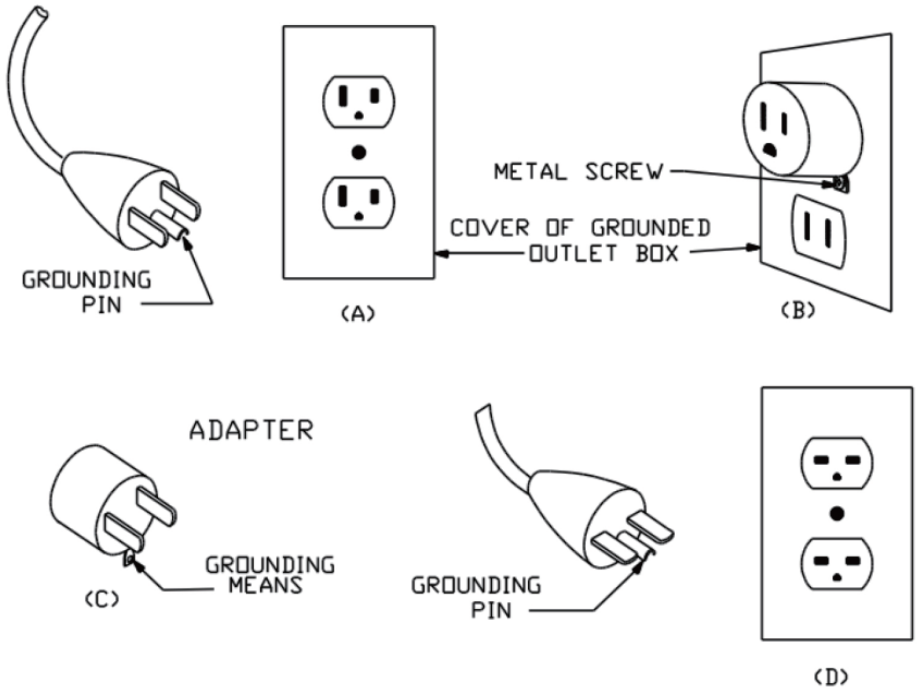

NOTE: Adaptors are NOT for use in Canada.

This device complies with part 15 of the FCC Rules. Operation is subject to the following two conditions: (1) This device may not cause harmful interference, and (2) this device must accept any interference received, including interference that may cause undesired operation.

FCC warning:

Any Changes or modifications not expressly approved by the party responsible for compliance could void the user's authority to operate the equipment.

Note: This equipment has been tested and found to comply with the limits for a Class B digital device, pursuant to part 15 of the FCC Rules. These limits are designed to provide reasonable protection against harmful interference in a residential installation. This equipment generates uses and can radiate radio frequency energy and, if not installed and used in accordance with the instructions, may cause harmful interference to radio communications. However, there is no guarantee that interference will not occur in a particular installation. If this equipment does cause harmful interference to radio or television reception, which can be determined by turning the equipment off and on, the user is encouraged to try to correct the interference by one or more of the following measures:

- Reorient or relocate the receiving antenna.
- Increase the separation between the equipment and receiver.
- Connect the equipment into an outlet on a circuit different from that to which the receiver is connected.
- Consult the dealer or an experienced radio/TV technician for help.

This equipment complies with FCC radiation exposure limits set forth for an uncontrolled environment. This equipment should be installed and operated with minimum distance 20cm between the radiator & your body.

IC warning

- English:

This device complies with Industry Canada license-exempt RSS standard(s).

Operation is subject to the following two conditions: (1) This device may not cause interference, and (2) This device must accept any interference, including interference that may cause undesired operation of the device.

This equipment complies with IC RSS-102 radiation exposure limits set forth for an uncontrolled nvironment. This equipment should be installed and operated with minimum distance 20cm between the radiator & your body.

- French:

Le présentappareilestconforme aux CNR d'Industrie Canada applicables aux appareils radio exempts de licence. L'exploitationestautorisée aux deux conditions suivantes:

1. l'appareil ne doit pas produire de brouillage, et

2. l'utilisateur de l'appareildoit accepter tout brouillageradioélectriquesubi, mêmesi le brouillageest susceptible d'encompromettre le fonctionnement.

Cet équipement est conforme aux limites d'exposition aux rayonnements IC établies pour un environnement non contrôlé. Cet équipement doit être installé et utilisé avec un minimum de 20cm de distance entre la source de rayonnement et votre corps.

SAVE THESE INSTRUCTIONS

2. TECHNICAL SPECIFICATIONS

Electric Specifications

Model	Volt	Watt(min/max)	Hz	BTU	Amp	Heating Area
EF671A, EF672A, EF673A EF675A, EF676A	120V	750/1500	60	5000	12.5	400sq.ft.

Product Dimensions

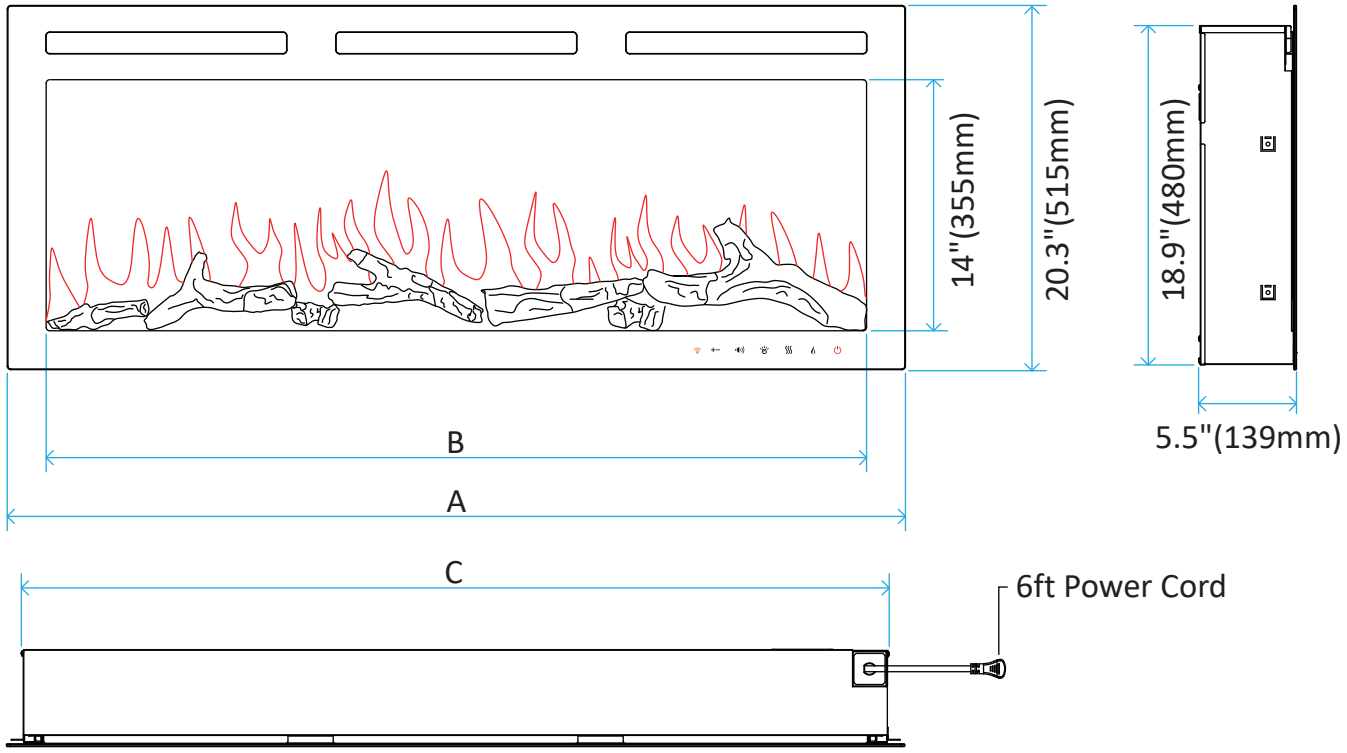

Model	Unit	EF671A	EF672A	EF673A	EF675A	EF676A
A	inch	36	40	50	59.6	68
	mm	914	1016	1270	1515	1727
B	inch	31.7	35.7	45.7	55.3	63.7
	mm	804	906	1160	1405	1617
C	inch	34.4	38.4	48.4	58.1	66.4
	mm	874	976	1230	1475	1687

3. BEFORE INSTALLATION

Note:

- Keep the packaging (carton, rapping bag, etc.) for future transportation and/or storage.
- If there is any problem or question, please contact the service team.
- If the unit needs to be returned, please make sure all the spare parts are packed inside and packing as the same as the original packing.

Check Spare Parts

- Open the packaging carefully and remove the polystyrene.
- Check all the spare parts are fully received.
- Carefully check if any damages that may have for the spare parts.

Note: Contact service team for help if there is any part missing or damaged. Email to customerservice@puraflame.com or call 909-206-6608.

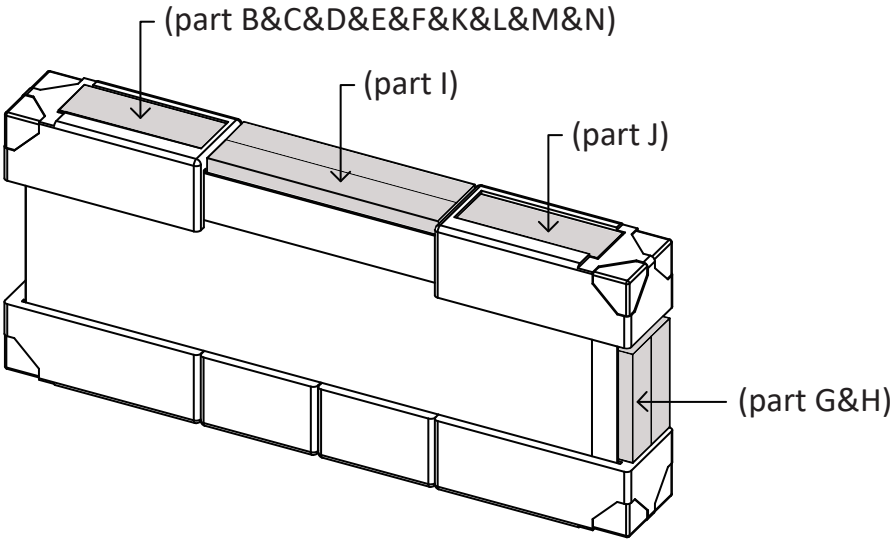

WARNING: This carton includes **GLASS! ALWAYS** use **extreme caution** when handling **glass.** Failure to do so could result in **personal injury** or **property damage.**

A. 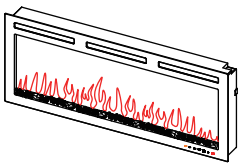 1 x	B. 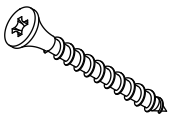 4 x	C. 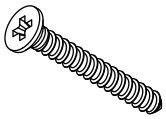 6/6/8/10/10 x	D. 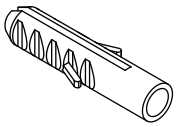 6/6/8/10/10 x
Fireplace	**Screw ST4*40**	**Screw ST5*40**	**Wall Plug Φ8*40**
E. 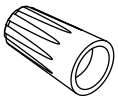 3 x	F. 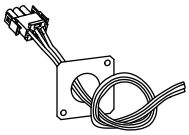 1 x	G. 1 set x	H. 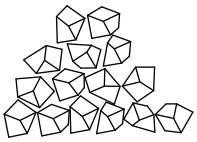 1 set x
Cable Cap	**Hard Wire Part**	**Crystal**	**Crystal**
I. 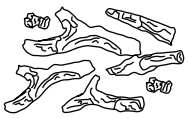 1 set x	J. 1 set x	K. 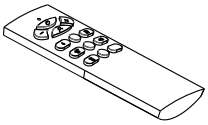 1 x	L. 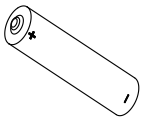 2 x
Resin Log	**Black Chips**	**Remote Handset**	**AAA Battery**
M. 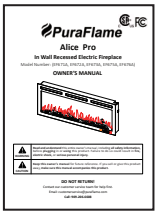 1 x	N. 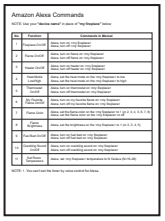 1 x		
Instruction Manual	**Voice Control Manual**		

Function testing

Please refer to section 5a. Manual Control and 5b. Remote Control to test the appliance first before installation. Should any defects found, please contact service team for help. Call 909-206-6608 or email customerservice@puraflame.com.

4. INSTALLATION INSTRUCTIONS

Tools Required

A Phillips screwdriver, a drill and a hammer will be needed.

Location the appliance

Your new electric fireplace may be installed virtually anywhere in your home. However, when choosing a location, ensure that the general instructions are followed.

- For best results, install out of direct sunlight.
- The appliance should be connected to an earthed electrical outlet and it must be easily accessible to allow disconnection.
- Try to avoid any conditions that may cause the fireplace to vibrate, which would result in the automatically turning on or off of the fireplace itself.
- Due to many different finish materials use on walls, it is highly recommended that you consult your local builder before you install this fireplace in the wall.

Minimum Clearance to Combustibles

Sides.....0

Floor.....0

Back.....0

Top (Mantel or TV) .....8" Minimum

Front.....36" Minimum

Electrical Supply Circuit Requirements

Plan the location of the appliance so that it will have adequate electric power. A 15 amp, 120V/60Hz circuit is required. Additional appliances on the same circuit as this appliance may exceed the current rating of the circuit. A dedicated circuit is not required, but is preferred to prevent circuit breaker trips or fuse failure.

Prepare the outlet close to the right side of appliance. Make sure the outlet is in good condition and the plug must be plugged tightly on the outlet.

For hard wiring, please refer to Hard Wire on page 17.

Note: Place the unit on a soft surface to avoid scratches during below steps and keep all the parts removed carefully.

1. Remove the wall mounting bracket.

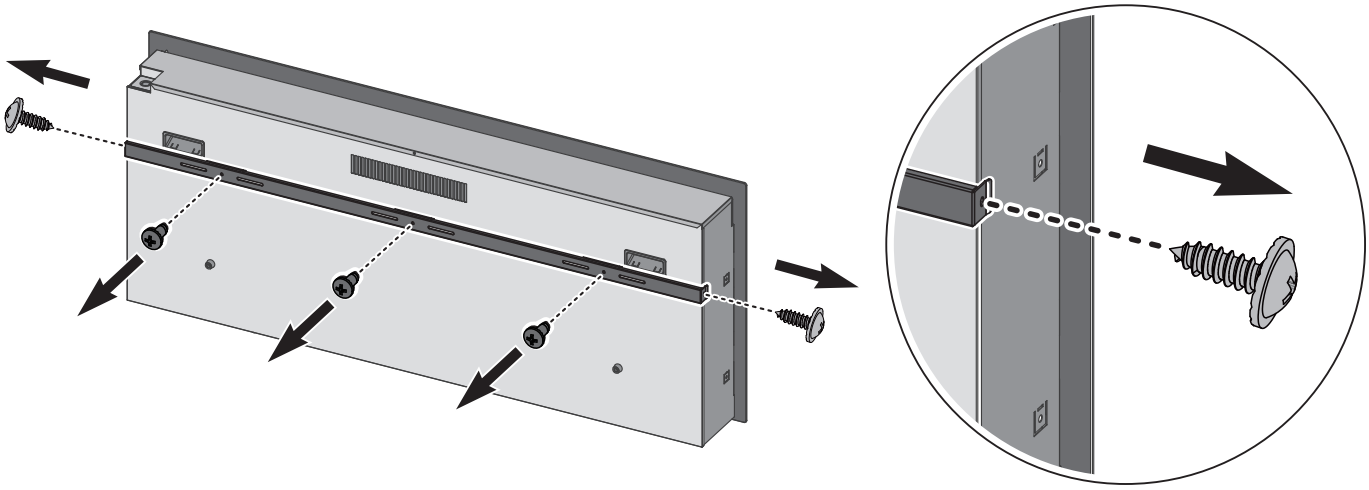

2. Remove the front glass.

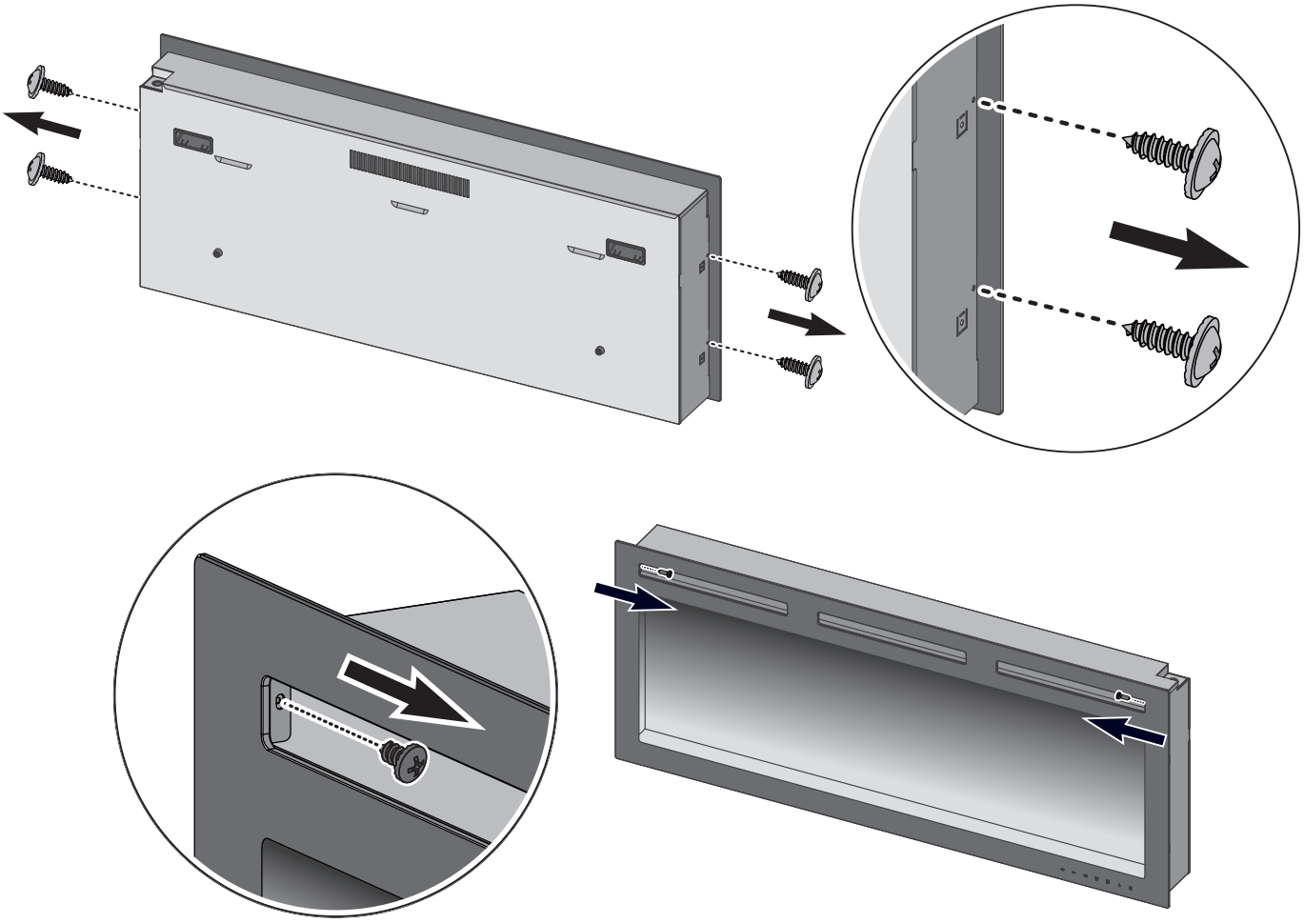

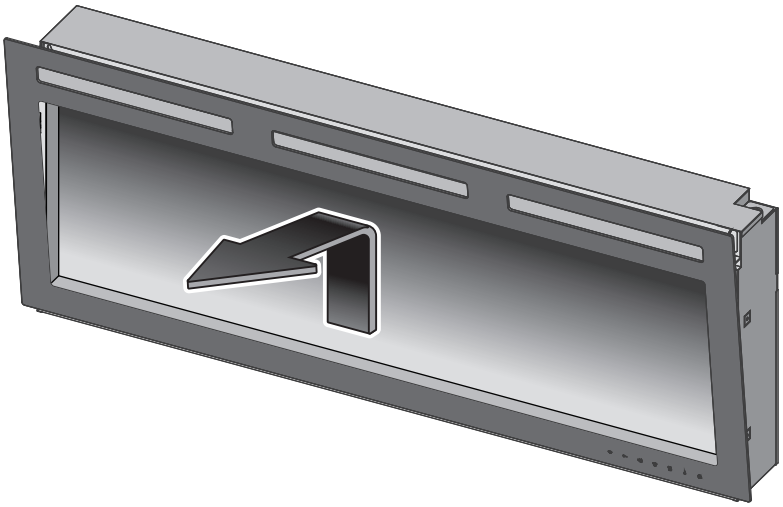

3. Installation

There are 2 installation types of this appliance: a. wall mounted, b. flush mounted.

3a. WALL MOUNTED INSTALLATION

3a.1 Fix the wall mount bracket on the wall. Put the mounting bracket on the wall where you would like to install the appliance, mark the holes for screws, drill holes on the marks, insert the wall plugs Φ8*40 (for masonry wall ONLY) into the holes and fix the bracket by screws ST5*40.

Note: Keep at least 1" on both sides of the wall bracket, 6.6" to top ceiling (if there is) and 13.4" to the floor.

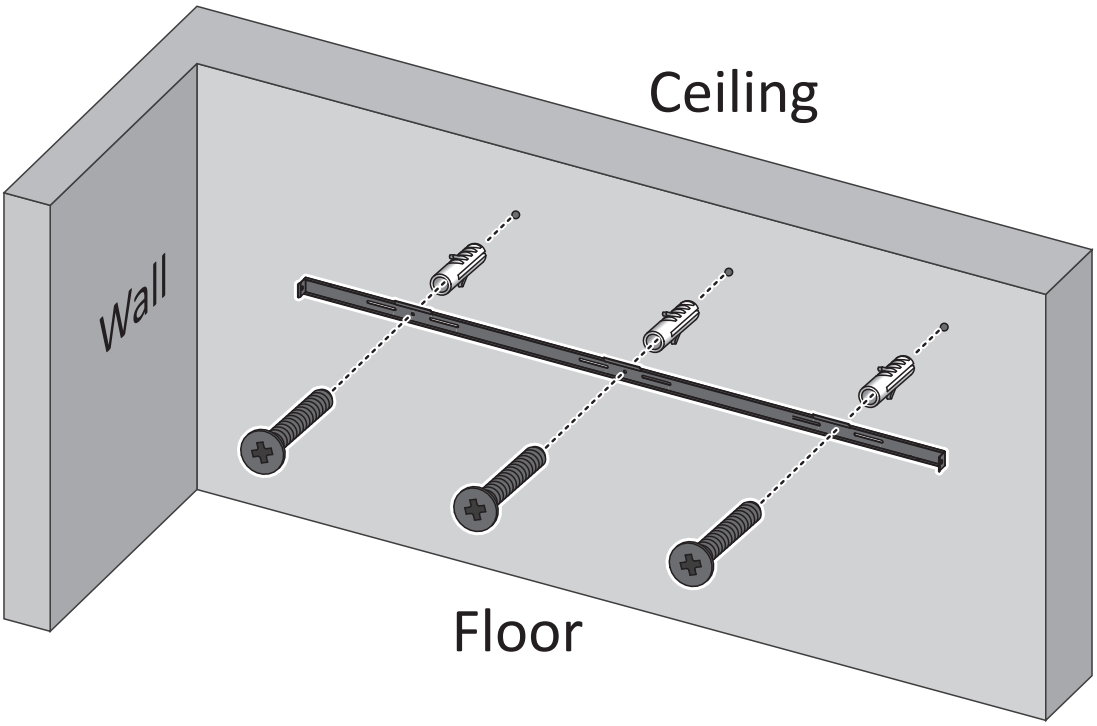

3a.2 Hang on the firebox on the bracket.

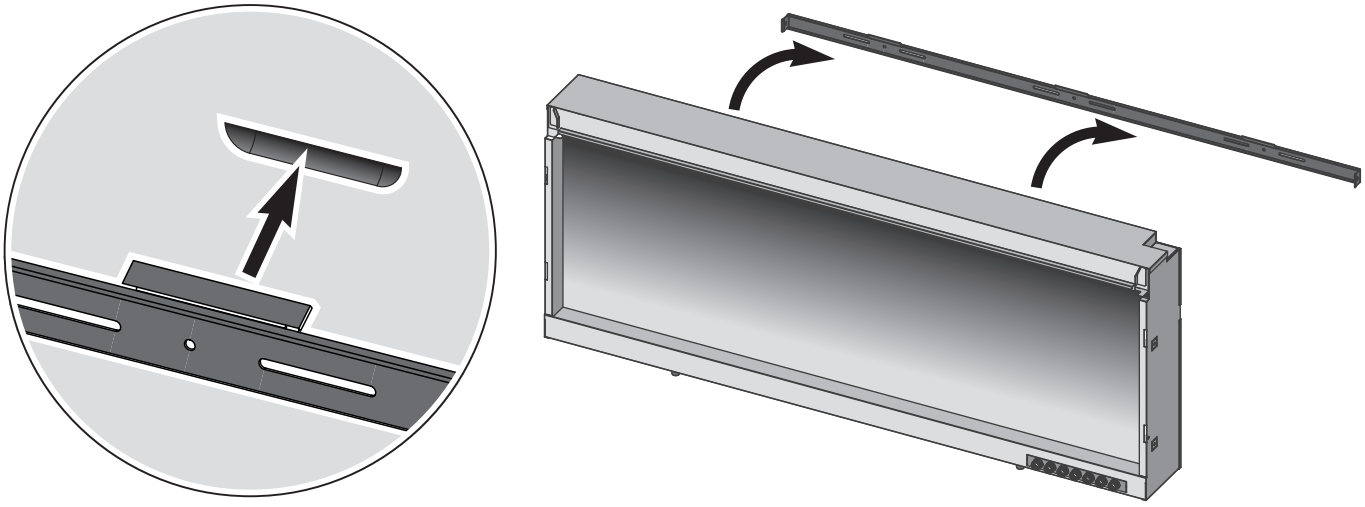

3a.3 Use the screws removed before to secure.

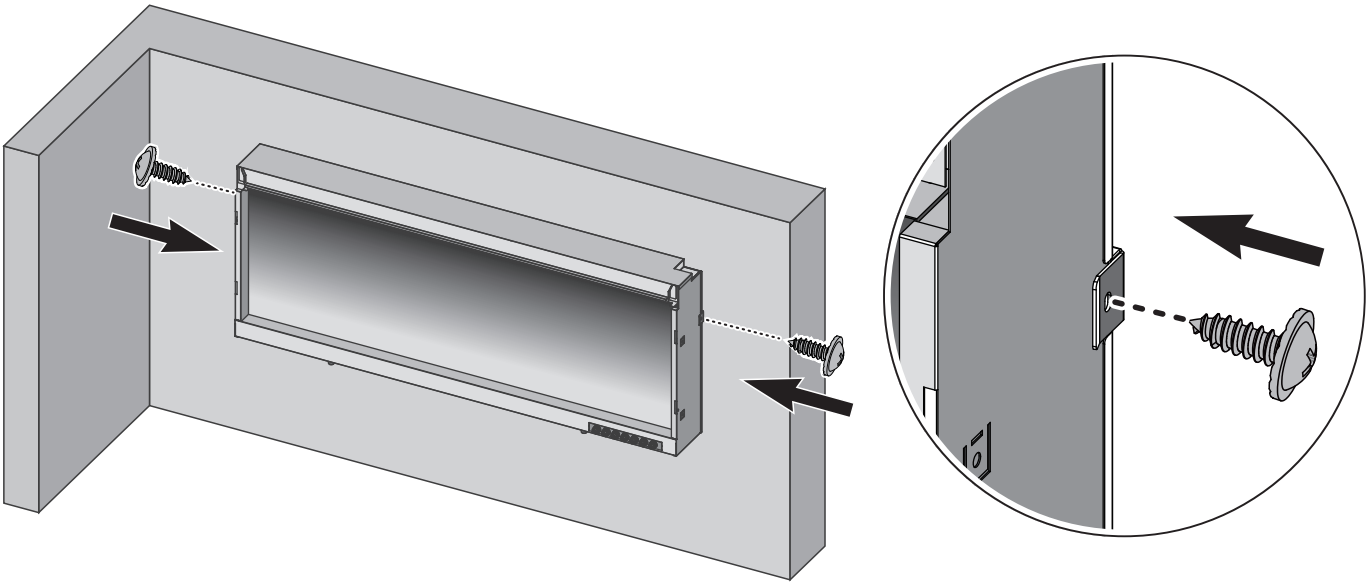

3b. FLUSH MOUNTED INSTALLATION

3b.1 Build the framing by 2x6” stud as picture for Alice 50” Pro as an example. The appliance will be supported by the bottom framing. Make sure the bottom framing is solid and level. Leave some gap behind the right stud for electrical supply.

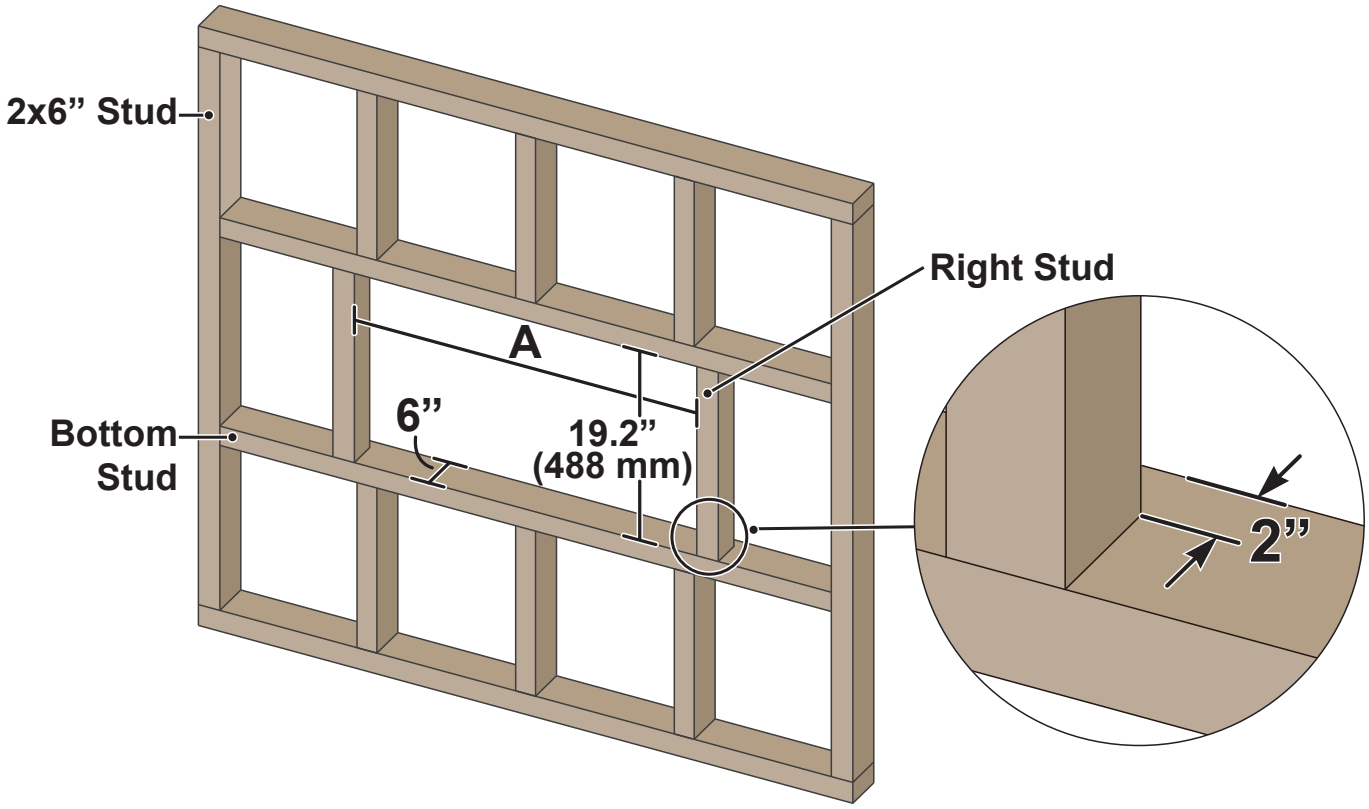

Model	Unit	EF671A	EF672A	EF673A	EF675A	EF676A
A	inch	34.6	38.6	48.6	58.6	66.6
	mm	879	981	1235	1489	1692

If you want to stick ledger stone on plasterboard, add one more wood on each side.

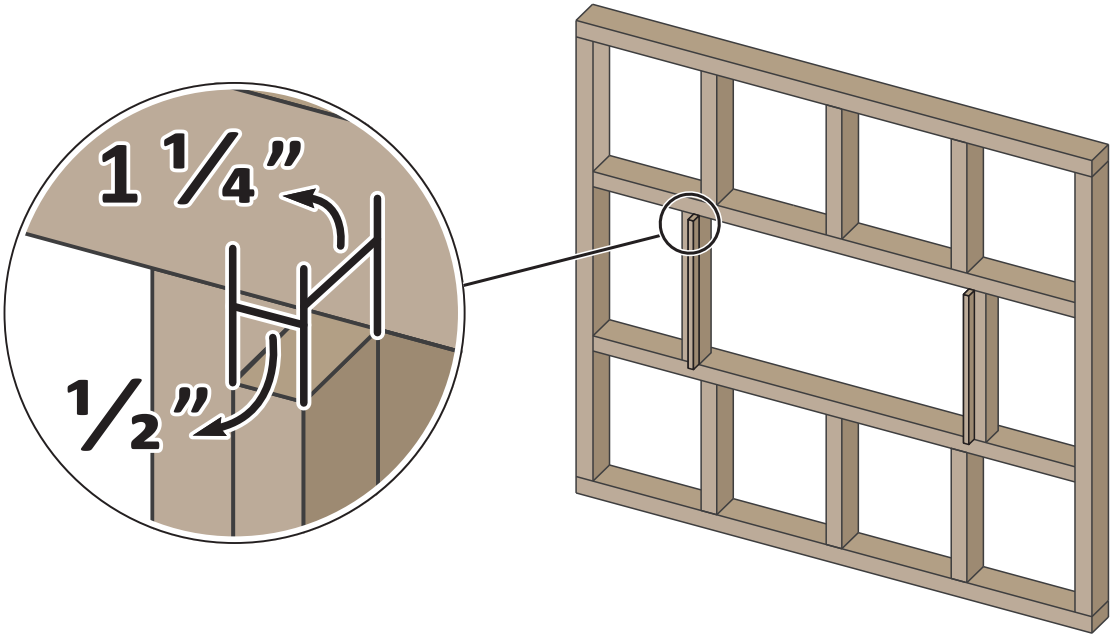

3b.2 Prepare electrical supply.

3b.3 Fix the plaster board to edge of the framed opening.

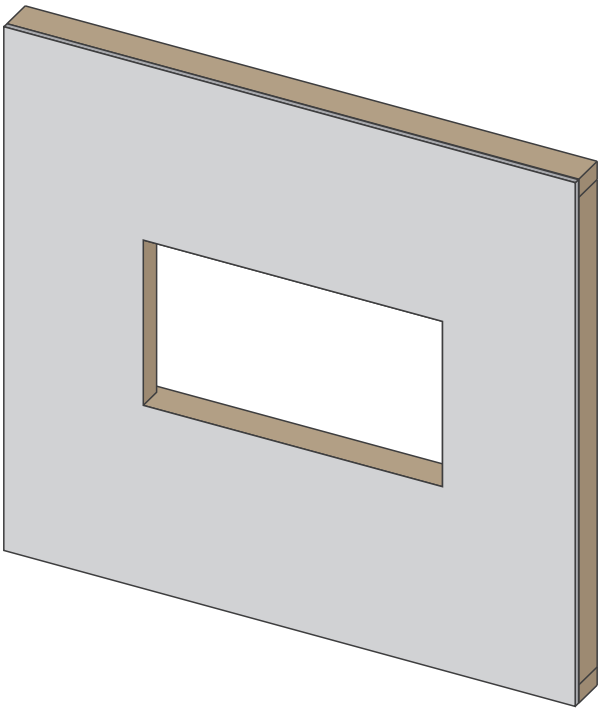

Paint or Wall paper

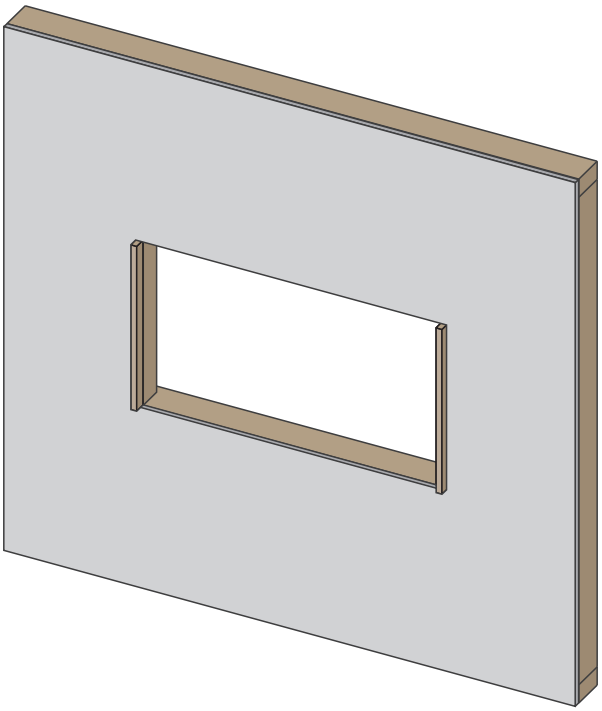

Ledger stone

3b.4 Finish the wall by paint, wall paper or ledger stone.

3b.5 Remove 2 rubber feet on the back.

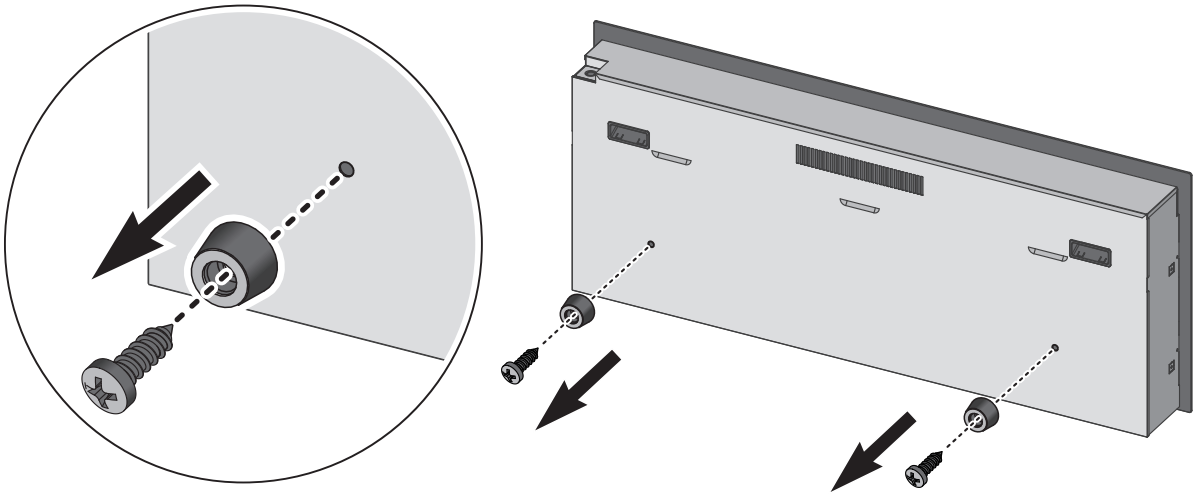

3b.6 Remove 4 rubber feet at the bottom.

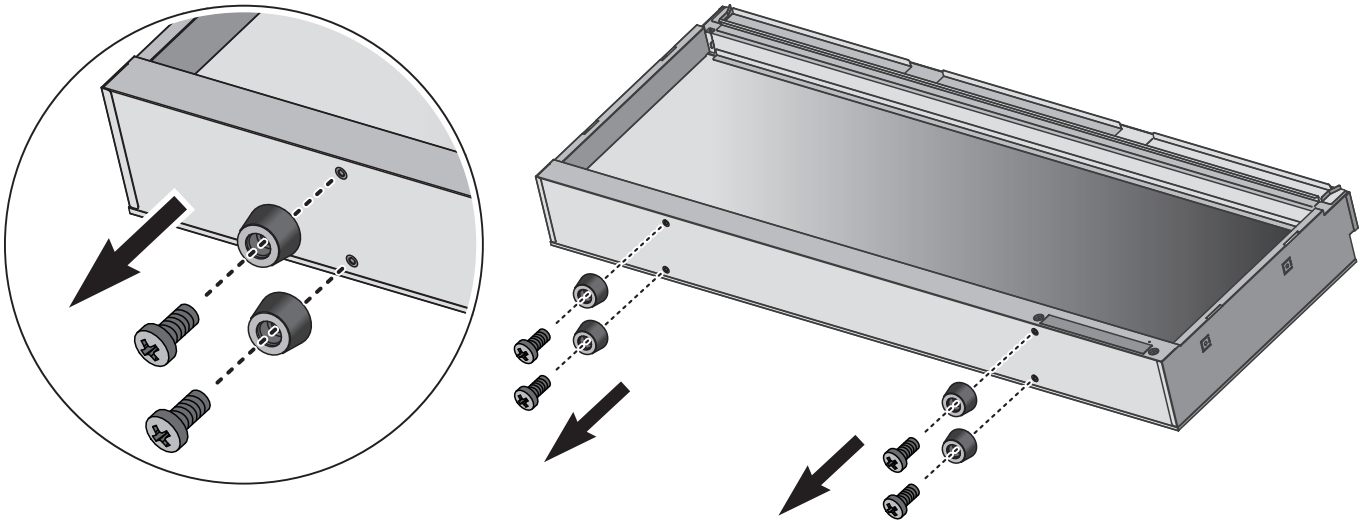

3b.7 Remove 2 screws and take out the left and right inner side panel.

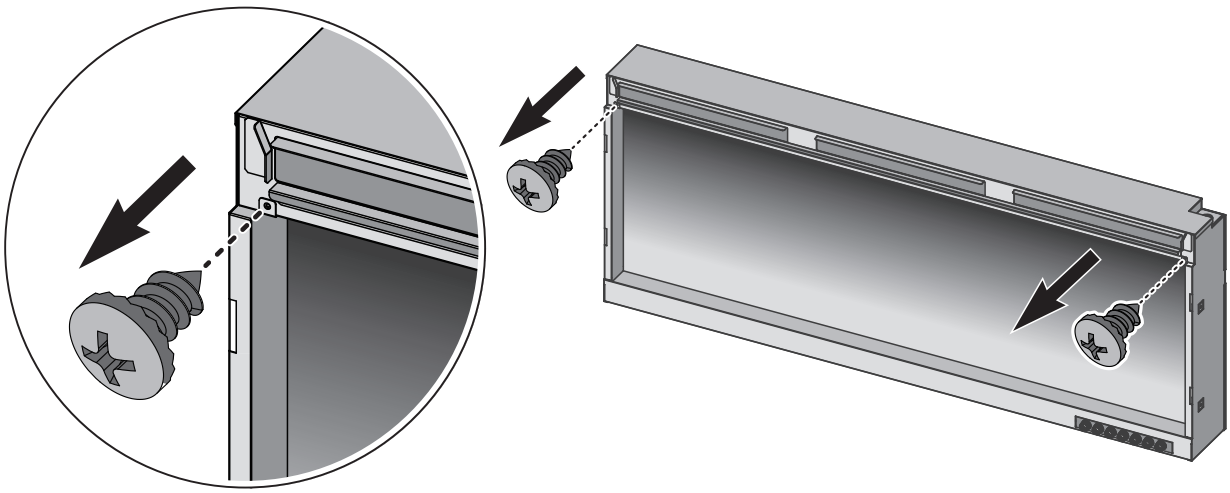

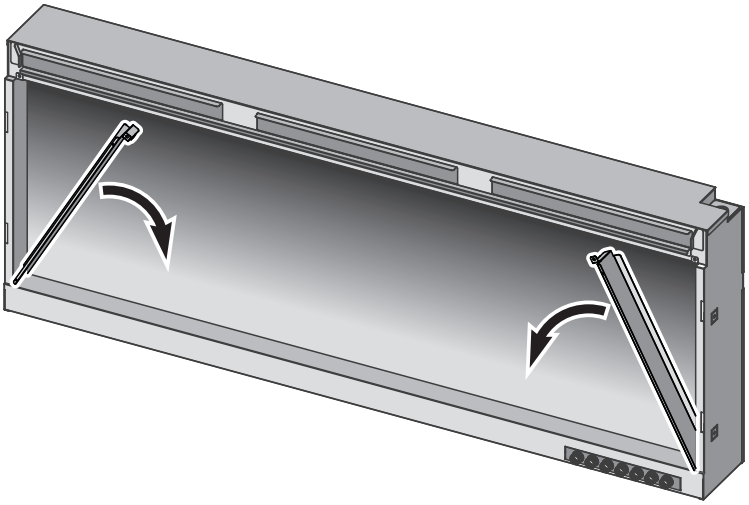

3b.8 Connect to electric service. Reference to Section **Electrical Connection** on page 17.

3b.9 Insert the firebox into the opening, adjust the position of the unit and let it stick out the wall about 1/8”, fix the fireplace on the side wood stud by screws (ST4x40 4pcs) and fix the panels back with screws.

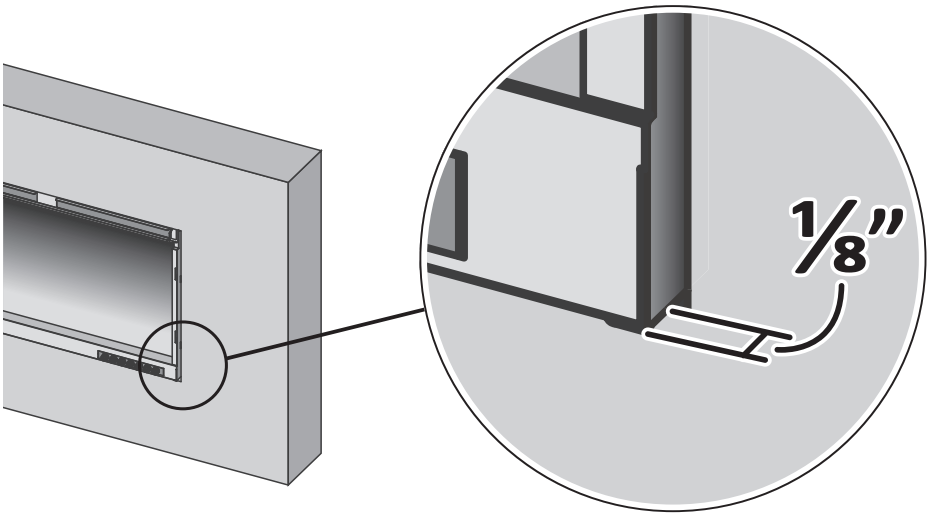

Leave 1/8" gap between appliance and wall finishing

Paint or Wallpaper

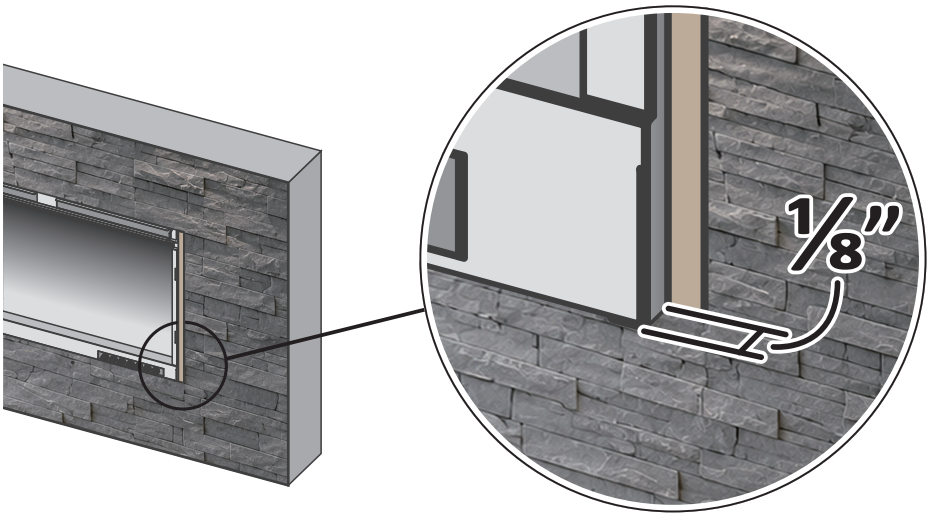

Ledger Stone

4. Set the fuel bed. Reference to Section Fuel Bed Setting on page 18.

5. Install the glass.

CAUTION! The next step required installation of a GLASS panel! Manufacturer recommends that 2 adults install the glass panel. Always use extreme caution when handling glass. Failure to do so could result in personal injury or property damage.

Carefully set 2 hooks on both sides of the front glass panel onto the holes of the firebox, put down the glass slowly. Fix the glass front by 2pcs screws removed before and complete the installation.

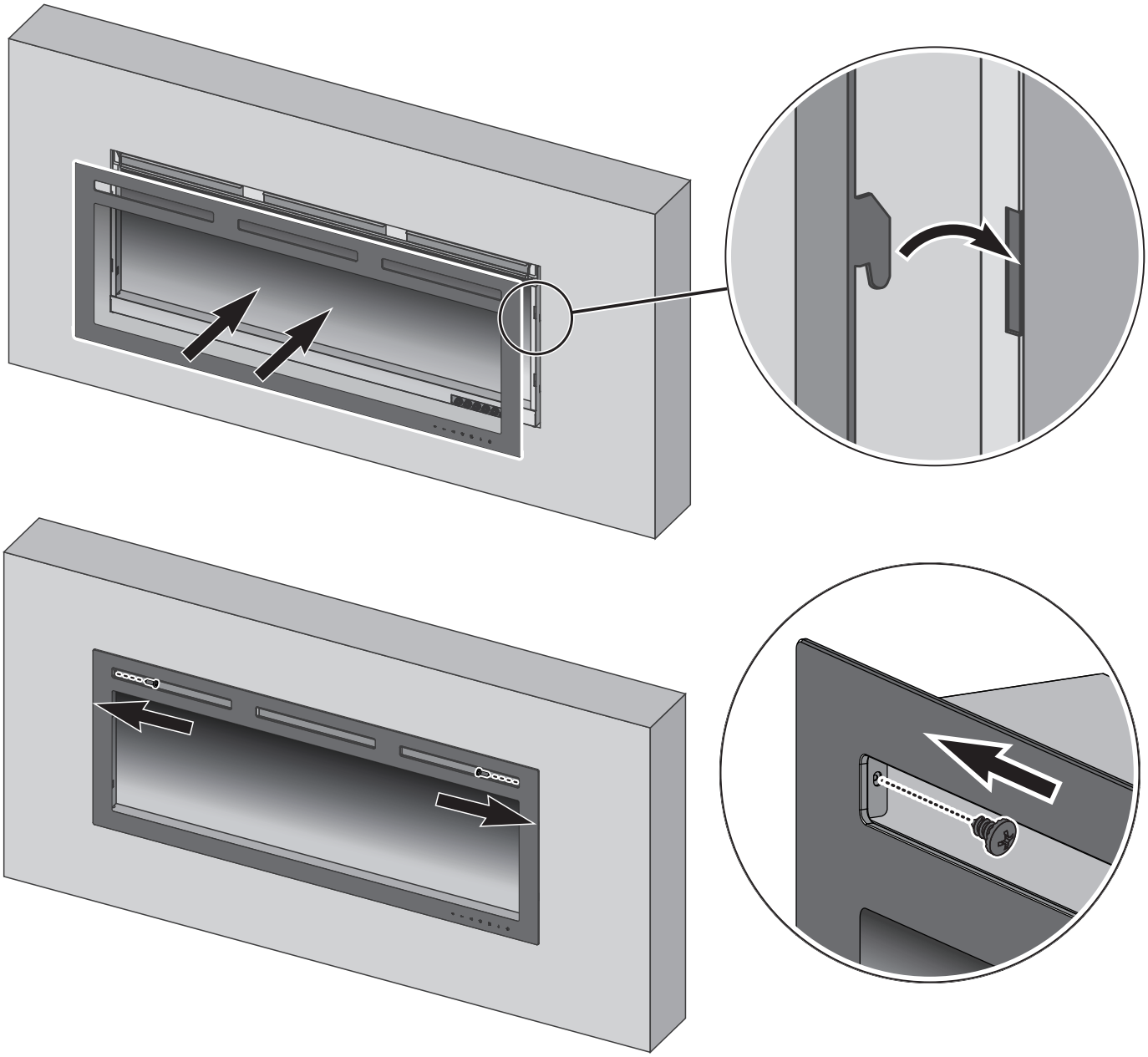

6. Finish the installation.

Electrical Connection

WARNING: Do not attempt to wire your own new outlets or circuits. To reduce the risk of fire, electric shock or injury to persons, the hard wiring must be supplied with a qualified electrician.

WARNING: Ensure that the circuit on which the fireplace is to be installed has the power cut off at the service panel until installation is complete.

The fireplace is packaged with a three prong plug installed for plug-in convenience. Hard wiring the fireplace is also an option for any installation.

a Plug in (the power cord is 6ft (1.8m) long and on the right of the fireplace, you may run the power cord out of the framed wall opening to an existing outlet or install an outlet on a nearby wall stud within the wall). If the cord is not long enough to reach the outlet, a grounded extension cord minimum AWG No. 14 wiring and rated to a minimum or 1875 watts may be used.

b Hard wire the fireplace (recommended). A qualified electrician may remove the cord connection, and wire the appliance directly to the house hold wiring. The appliance must be electrically connected and grounded in accordance with local codes.

1.

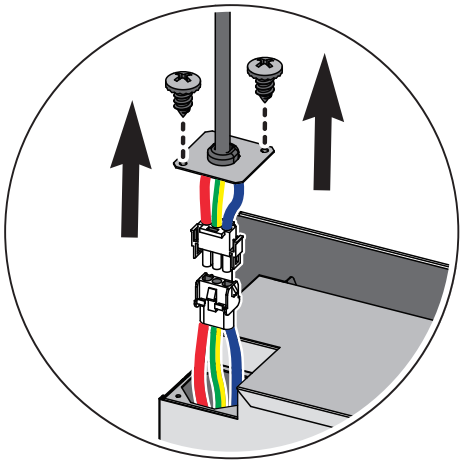

Release 2 screws to remove the power cord.

2.

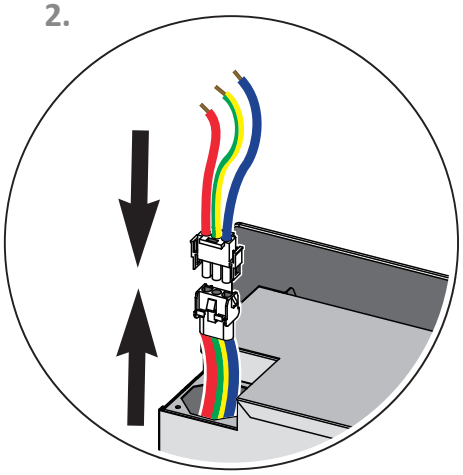

Plug the connect wire (part F).

3.

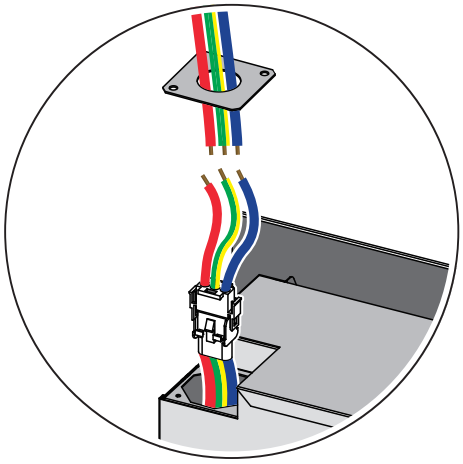

Strip the wires from house and insert into the hole of the junction plate (part F).

4.

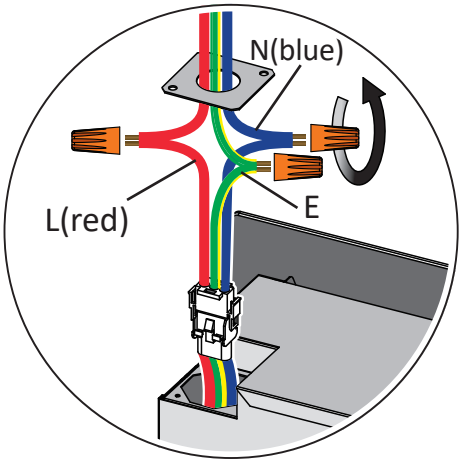

Connect by caps (part E).

5.

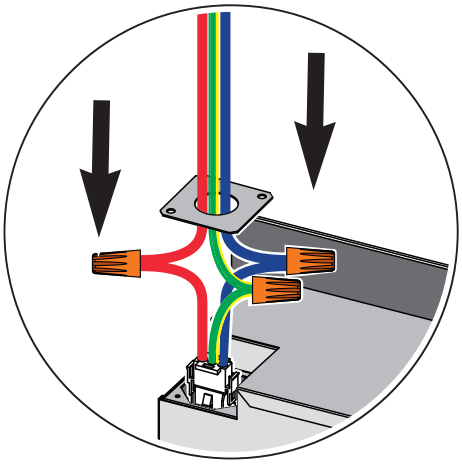

Insert all inside the firebox.

6.

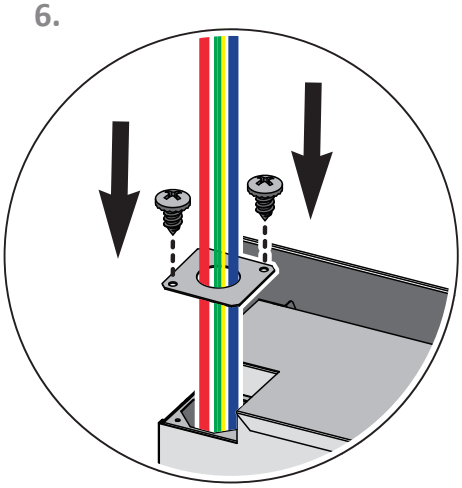

Fix junction plate to the firebox.

Fuel Bed Setting

The appliance is supplied with 2 fuel bed effect options: a. Crystal Effect. b. Log Effect

a. Crystal Effect

Evenly spread the small clear crystals across the fuel bed. Randomly space the large crystals throughout the fuel bed.

b. Log Effect

Logs must be positioned according to the following instructions to give the correct flame effect. Please refer to Diagram below to identify the logs for specific models.

BI-1 BI-2 BI-3 BI-4 BI-5 BI-6

b1. Place the logs on the fuel bed according to the model numbers printed on the panel.

EF673A (Alice 50" Pro):

Overview:

i:

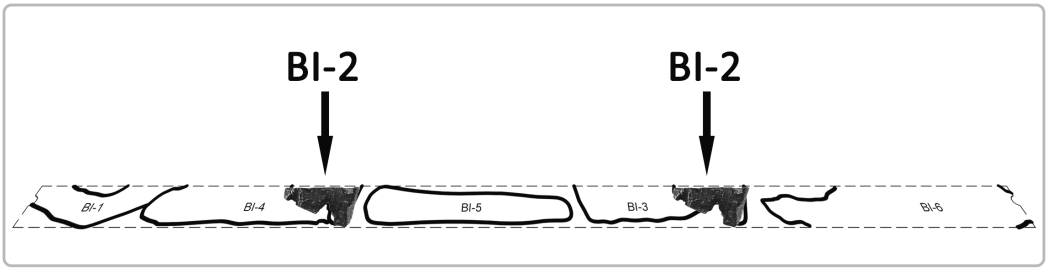

ii:

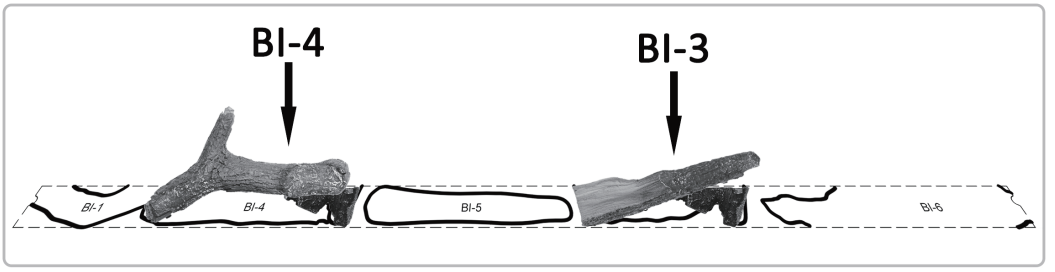

iii:

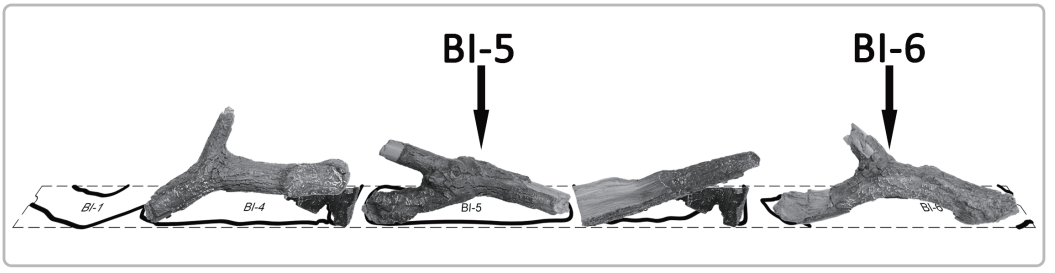

iv:

EF675A (Alice 60" Pro):

Overview:

i:

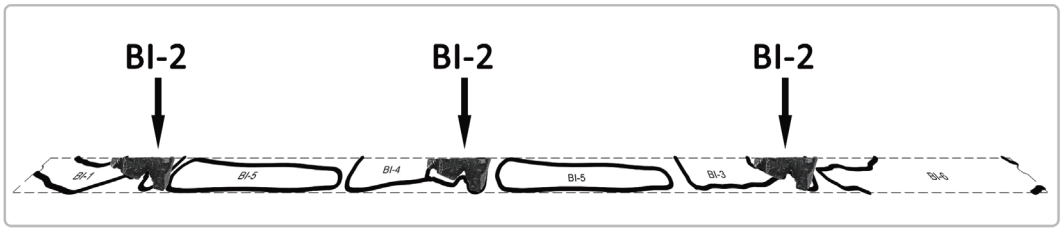

ii:

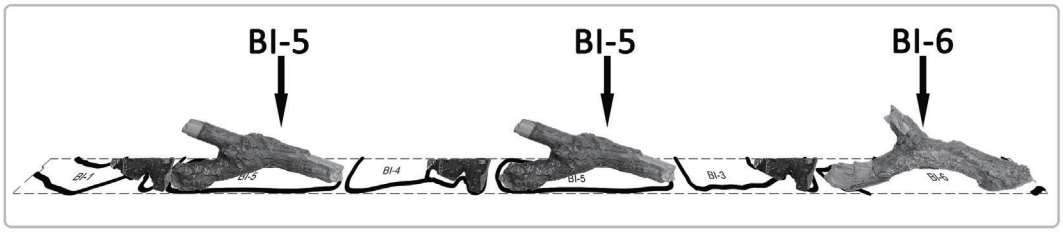

iii:

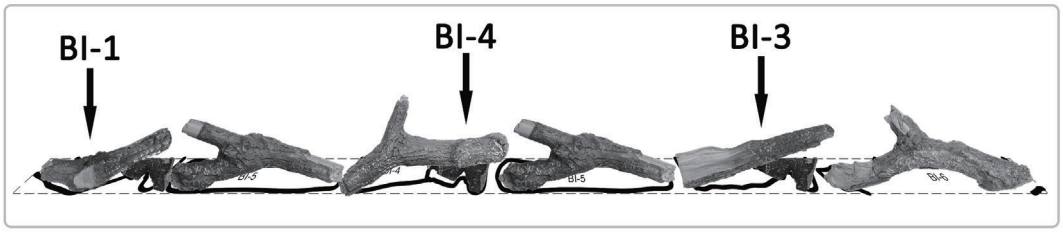

b2. Place the black chips between the log layout.

EF673A (Alice 50" Pro):

EF675A (Alice 60" Pro):

5. OPERATION INSTRUCTIONS

Read and understand this entire owner's manual, including all safety information, before plugging in or using this product. Failure to do so could result in electric shock, fire, serious injury, or death.

WARNING! Do not operate the unit if it is damaged or has malfunctioned. If you suspect the unit is damaged, call a qualified service technician to inspect and replace any part of the electrical system if necessary.

5a. MANUAL CONTROL

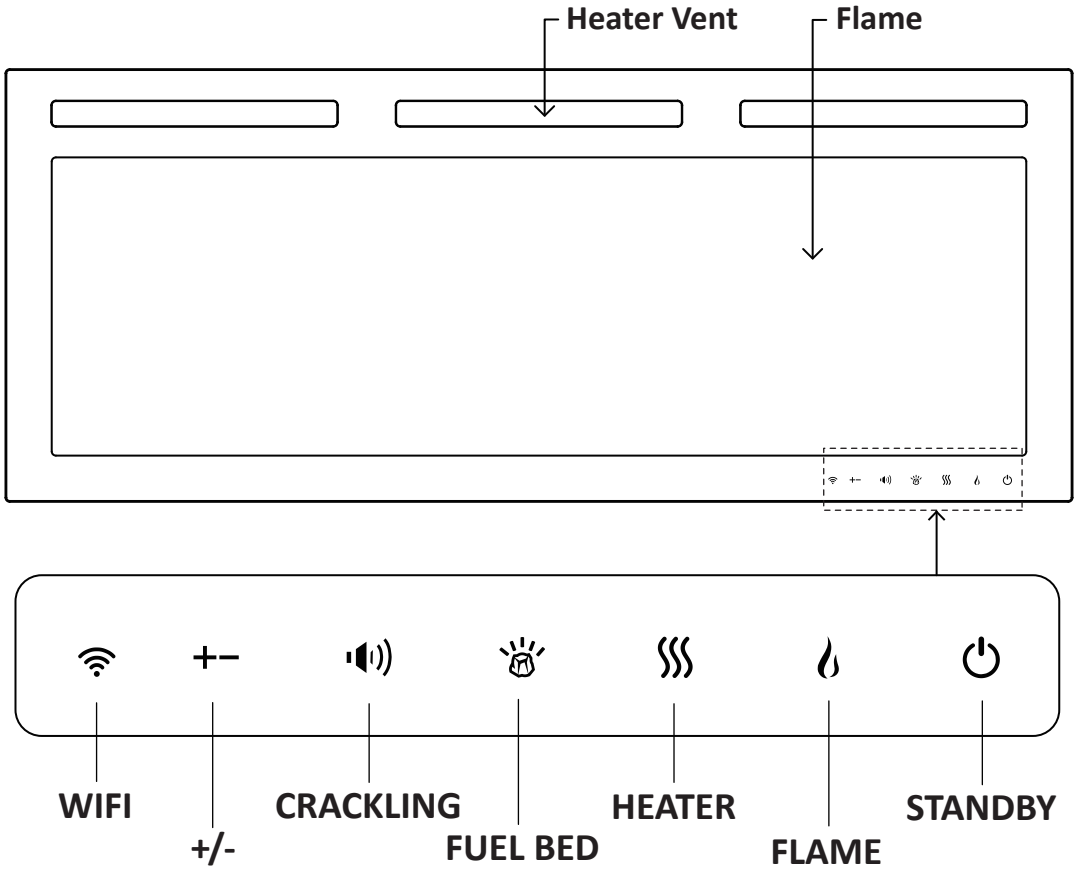

Note: The manual buttons control only basic functions, not a full range of controls. Use in conjunction with the remote handset or the APP to carry out.

BUTTON	TITLE	FUNCTION
	STANDBY	Turns on the appliance with the last used settings without any heat. Place the appliance into standby mode with all features turned off.
	FLAME	Press to cycle through 6 flame colors and off setting. **Note:** Each time a button is pressed on the appliance or on the remote control, an audible beep is emitted. To turn off this feature, keep pressing button FLAME for 3 seconds.
	HEATER	Press to cycle through the heat output options: Low-High-Off. **Note:** Press HEATER button for 3s to change the temperature unit between ℃ and ℉.
	FUEL BED	Press to cycle through 13 fuel bed colors, cycle and off setting.
	CRACKLING	Press to turn on/off the crackling sound.
+ −	**MINUS & PLUS**	Press to adjust the brightness and volume after pressing the FLAME/FUEL BED/CRACKLING button once; Press directly to set the temperature.
	WIFI	Press for 3s to turn WiFi on or off.

NOTICE:

- Do not move the glass panel when the appliance is plugged in and operation. This will cause control panel malfunction.
- A harmless slight brief odor may occur during first use or not used for a long period of time.
- The heater can be turned on without the flames. Third fuel bed will keep on at 5% brightness to indicate that heater is on.
- There is a brief delay between the heater command and the heating turning ON. when the appliance receives a heater ON command, the appliance blower will turn ON for 8s before the heater turns ON. There is also an 8s delay between heater off and blower shutdown.

RESETTING THE THERMAL CUT OUT

The appliance is fitted with an Electronic Safety Control (E.S.). This is a safety device, which switches off the fire if, for any reason, the appliance overheats, e.g. when covered. If the heater stops operating while the flame effect continues working normally, this indicates that the E.S. Control is in operation. The E.S. Control can only be re-set after the appliance has cooled down, and the appliance has been reset. Resetting of the E.S. Control proceeds is as follows:

1. Switch off the appliance (Manual switch) and leave it off for approximately 10-15 minutes.
2. Remove any obstruction to the fan heater outlet or fan blades etc. Make sure that the power supply is disconnected with the plug socket outlet while doing this.
3. Switch on the appliance and the E.S. Control will be reset.
4. Ensure that the appliance is functioning correctly. If the E.S. Control operates again, the appliance should be checked by a competent electrician.

5b. REMOTE CONTROL

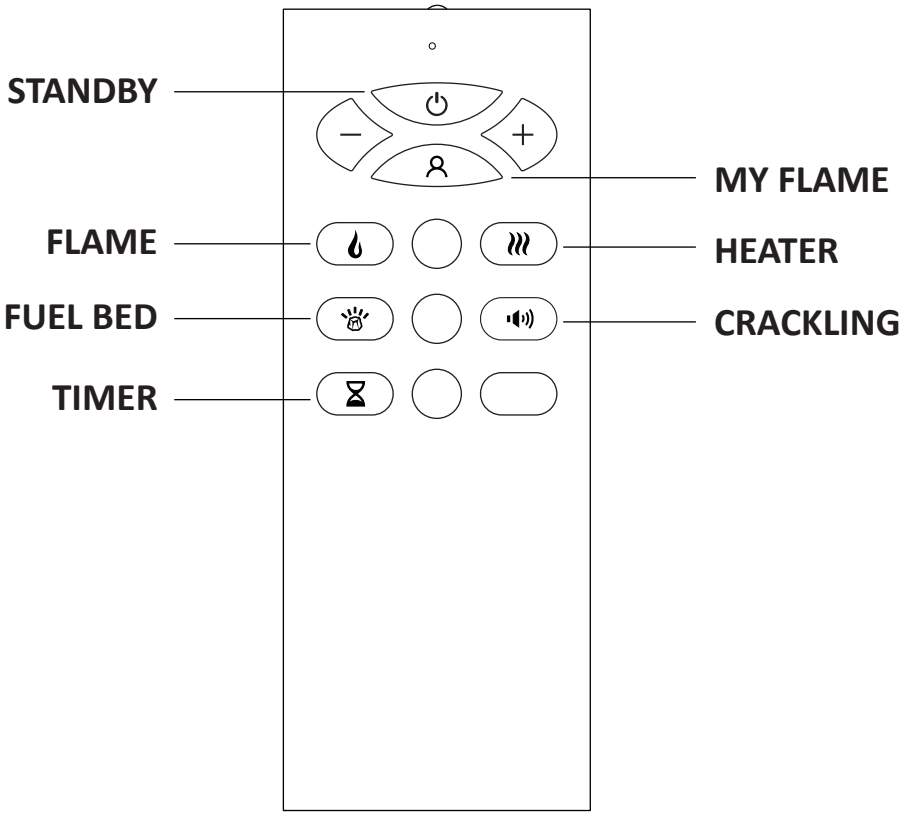

BUTTON	TITLE	FUNCTION
	STANDBY	Turns on the appliance with the last used settings without any heat. Place the appliance into standby mode with all features turned off.
	MY FLAME	Press 3s to record current color and brightness of flame and fuel bed as my favorite flame.
	FLAME	Press to cycle through flame 1, 2, ... 6 and off.
	FUEL BED	Press to cycle through fuel bed 1, 2, ... 13, cycle mode and off.
+ −	**MINUS & PLUS**	Press to adjust the brightness, volume, and time after pressing the FLAME/FUEL BED /CRACKLING/TIMER button once; Press directly to set the temperature.
	HEATER	Press to cycle through Low-High-Off. **Note:** if the thermostat is on and room temperature is higher than setting value, the heater will not work.
	TIMER	Press to cycle through 0.5H, 1H, 2H, 3H, 4H, 5H, 6H, 7H, 8H, 9H and off.
	CRACKLING	Press to turn on or turn off crackling sound effect.

Note: In order to prevent the product becoming too hot, there is a 8s delay when turning on the heater and a 8s delay when turning off the heater fan.

IMPORTANT SAFETY INFORMATION FOR BATTERY

- Two AAA battery are required for the remote control;
- Use the thumb press and push the bar figure on the back cover down simultaneously, then take out the cover and remove the battery or insert the battery, after this place the cover back on the rear of the remote;
- This AAA battery (non-recharged) is not to be recharged;
- Different types of batteries or new and used batteries are not to be mixed;

- Battery is to be inserted with the correct polarity;
- Exhausted batteries are to be removed from the appliance and safely disposed of;
- If the remote control is to be stored unused for a long period, the battery should be removed;
- The supply terminals are not to be short-circuited.

5c. APP CONTROL

Visit your APP store (IOS or Android) to download the TUYA SMART APP. Follow the onscreen instructions to create an account. Once installed, follow the procedure below to pair the device with your appliance.

- Start the APP and click “Add Device” on screen. Select “Small Home Appliance” from the list, then select “Electric Fireplace (Wi-Fi)”.
- Ensure the appliance is powered on, then press and hold the Wi-Fi button on the appliance until you hear 3 beeps at EZ mode. At the same time the Wi-Fi button and the fuel bed will blink. If failed at EZ mode, try AP mode. Please press the Wi-Fi button, you will hear 3 beeps, then keep pressing until you hear other 5 beeps enter AP mode.
- Follow the instructions on the APP to input your home network details. Note, your device must also be connected to the same home network what you wish to connect the appliance to.
- Complete setup and link the fireplace to your account.

We have created a very detailed APP Operation Instruction and a video to guide you through the process how to load down the TUYA Smart APP, create an account, pair your appliance to your smart phone and operate the appliance. Scan the QR code to be taken to the Operation Instruction or the video.

5d. VOICE CONTROL

Note: Before using voice control, ensure that the appliance is connected to the TUYA APP and that Amazon Alexa or Google Assistant APP is installed.

Voice control via Amazon Alexa & Google Assistant. See 《Amazon Alexa & Google Assistant Commands》

6. CARE AND MATAINTENANCE

ALWAYS turn the heater OFF and unplug the power cord from the outlet before cleaning, performing maintenance, or moving this fireplace. Failure to do so could result in electric shock, fire, or personal injury.

Cleaning

NEVER immerse in water or spray with water. Doing so could result in electric shock, fire, or personal injury.

Metal:

- Buff using a soft cloth, slightly dampened with a citrus oil-based product.
- DO NOT use brass polish or household cleaners as these products will damage the metal trim.

Glass:

- Use a good quality glass cleaner and dry thoroughly with a paper towel or lint-free cloth.
- **NEVER** use abrasive cleansers, liquid sprays, or any cleaner that could scratch the surface.

Plastic:

- Wipe gently with a slightly damp cloth and a mild solution of dish soap and warm water.
- NEVER use abrasive cleansers, liquid sprays, or any cleaner that could scratch the surface.

Vents:

- Use a vacuum or duster to remove dust and dirt from the heater and vent areas.
- Clean the exterior of the fireplace with a slightly damp cloth or duster.

Maintenance

Risk of electric shock! DO NOT OPEN! No user-serviceable parts inside!

ALWAYS turn the heater OFF and unplug the power cord from the outlet before cleaning, performing maintenance, or moving this fireplace. Failure to do so could result in electric shock, fire, or personal injury.

Electrical and Moving Parts:

- The fan motors are lubricated at the factory and will not require lubrication.
- Electrical components are integrated in the fireplace and are not serviceable by the consumer.

Storage:

- Store heater in a clean dry place when not in use.

Replacement parts:

- Use only replacement parts supplied by the manufacturer. Use of any other parts, or modifying the fireplace in any way, will void all warranties.
- No internal parts are replaceable or serviceable.

7. LIMITED WARRANTY

This warrants to the original purchaser that this product is free from defects in material and workmanship as of the date of purchase and that it will, under normal use and proper care, remain so for one year from the date of purchase. Missing or initially defective parts will be replaced free of charge during the period of this limited warranty. If parts are unavailable, comparable replacement of refund will be given. The original dated sales receipt is required for all warranty claims. This warranty does not cover damage which has occurred during transport from the point of purchase to the consumer's home. This warranty does not cover glass, light bulbs, batteries, transportation, labor, or other issues not associated with the manufacture of the product.

This product is for residential use only. Any and all commercial use of this product voids all warranties, and frees the manufacturer from all liability.

Read and understand all assembly and operating instructions, and all safety information and warnings, before use. The following will void this warranty: Damage caused from tampering with, modifying, or altering the fireplace insert in any manner; Damage due to incorrect assembly, improper care, misuse, or abuse; Damage from being used with the wrong power source; Water damage; Damage caused from this insert being used outdoors; Damage caused from this insert being used for excessive periods of time; Damage caused by the insert being used in a commercial application; Damage from use as a primary heat source; Other misuse or abuse not specifically listed herein.

This product is not intended to be used as a primary heat source. It is for supplemental heating purposes only.

8. SCHEMATIC DIAGRAM

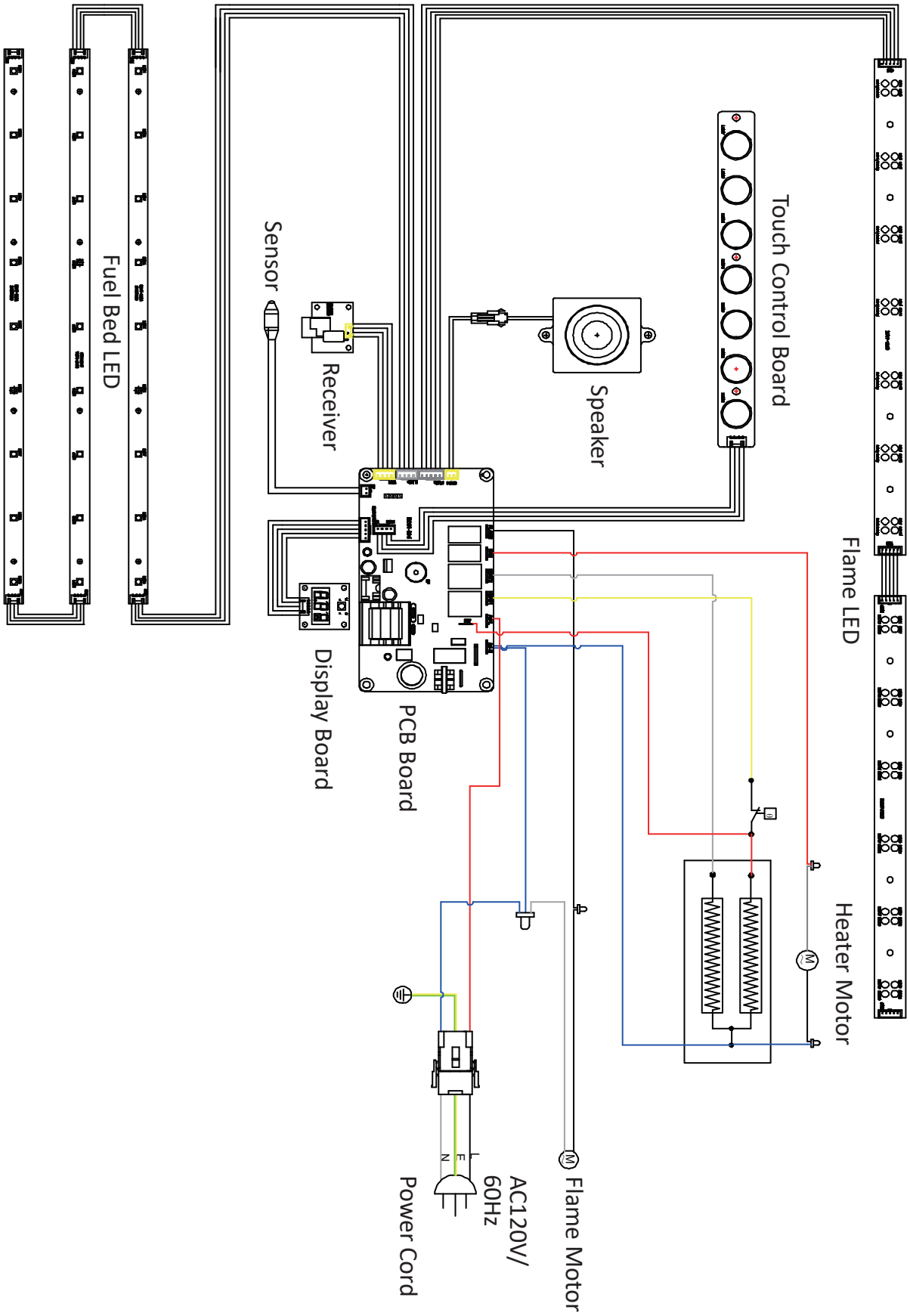

Ningbo Richen Electrical Appliance Co., Ltd.

Address: No.19, Yongdinghe Road, Xiapu, Beilun, Ningbo, Zhejiang, P.R.China

www.puraflame.com

3.EF.673.05.008 A3