Assembly Instruction
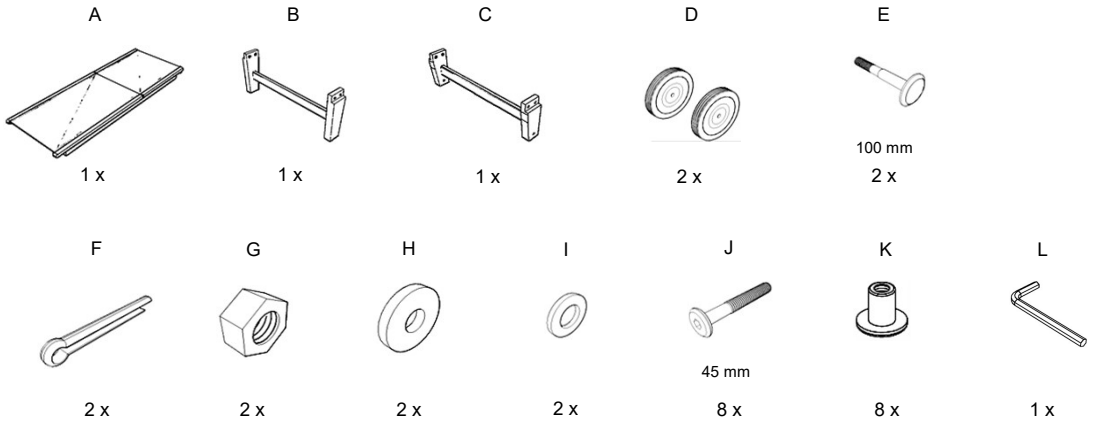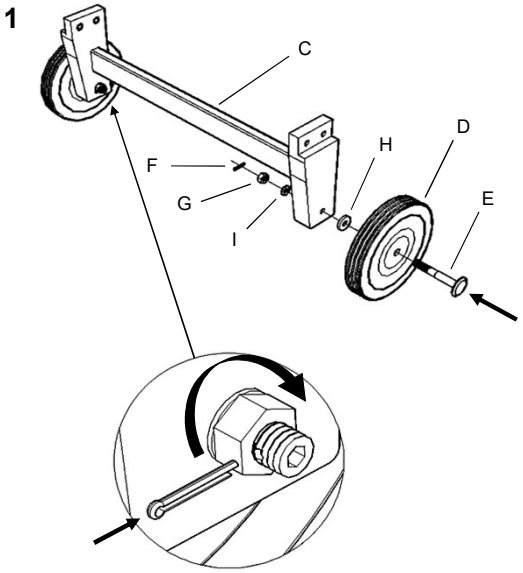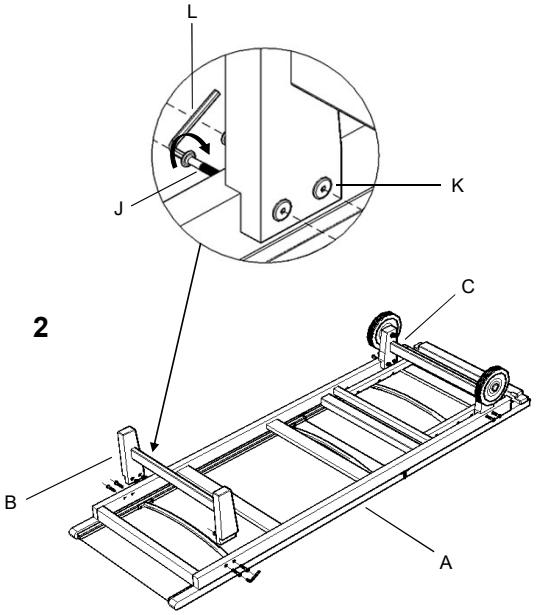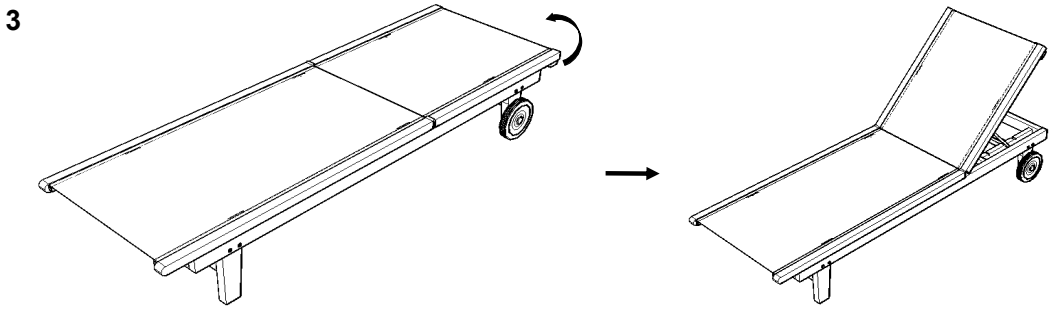
DECK SIDE KD SLING CHAISE LOUNGE