3-Piece Set

Product ID. 7PZKN

Scan for Support

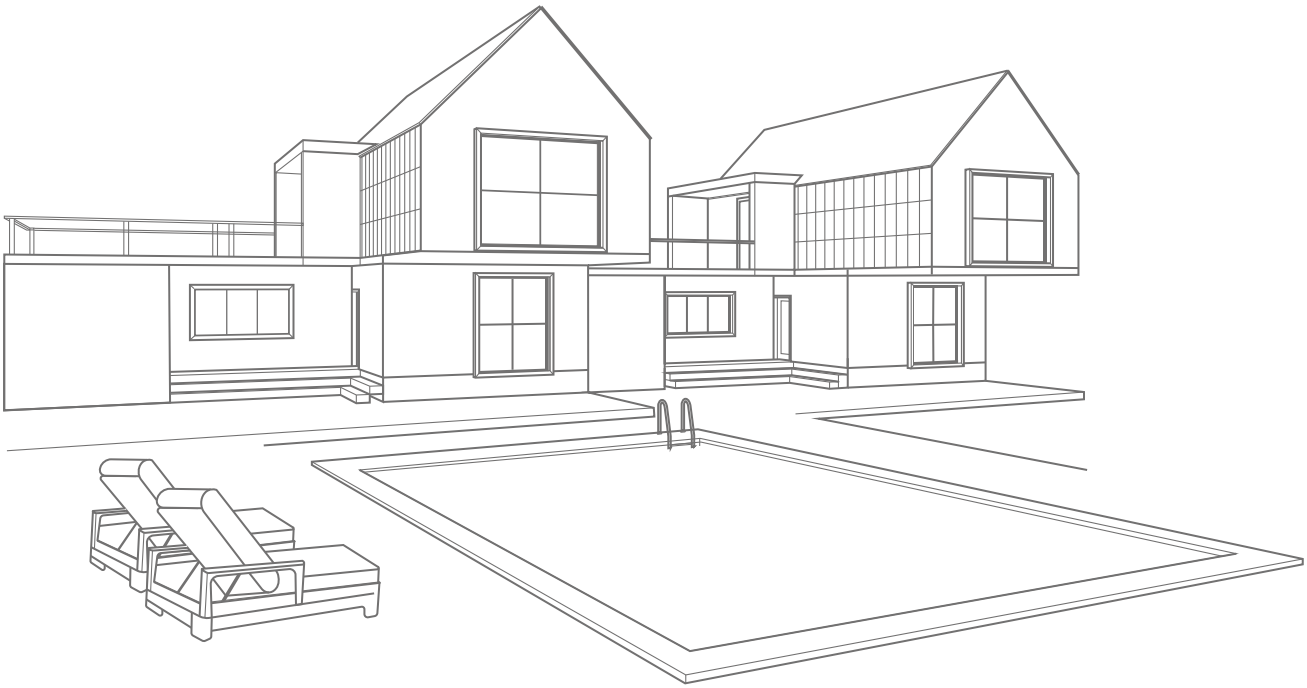

Distributed by

GARVEE.com

support@garvee.com

PHO_132QSLYS	PHO_132QFGFE	PHO_132Q9RWK
PHO_132QNYKO	PHO_132QS6IH	PHO _ 132Q7BSB

Installation Manual

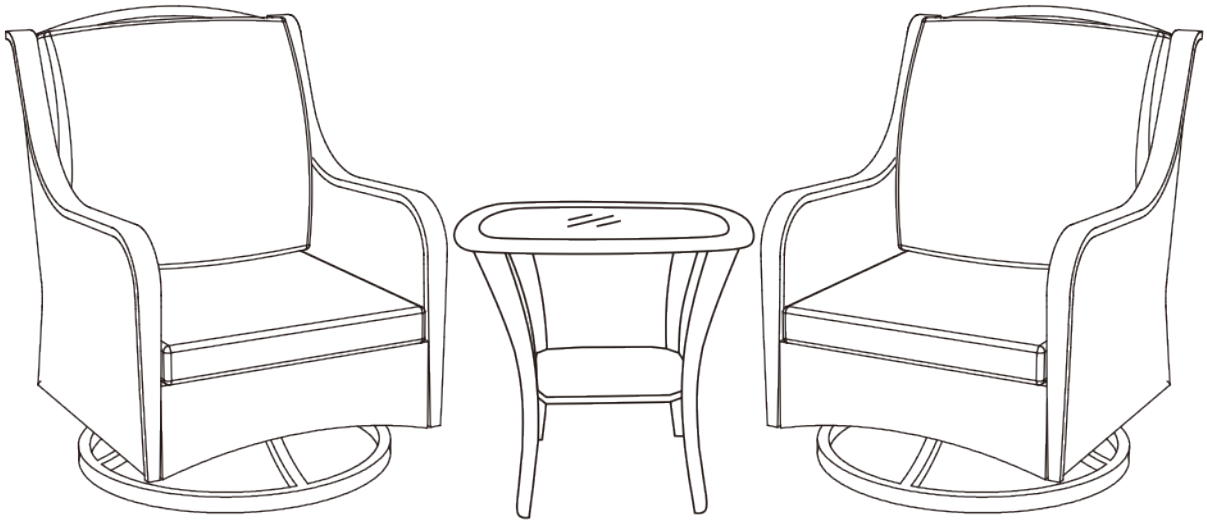

Team Assembly Recommended

Trouble shooting:

Missing / Wrong / Broken parts and installation issues

↓

Send email with your question, pic and order NO. to ***support@garvee.com***

↓

Respond within 24 hours

↓

Issue resolved

Patio Set Assembly Instructions

Part	Description	Qty	Part	Description	Qty
A	Left	2 pcs	H		2 pcs
B	Right	2 pcs	I		2 pcs
C		2 pcs	J		1 pcs
D		2 pcs	K		4 pcs
E		2 pcs	L		1 pcs
F		2 pcs	F1		8 pcs
G		2 pcs			

Part	Description	Qty
#1		2 pcs
#2		1 pcs
aa	12	12 pcs
bb	18	8 pcs
cc	30	8 pcs
dd	40	8 pcs
ee		16 pcs
ff		24 pcs
GG	35	24 pcs

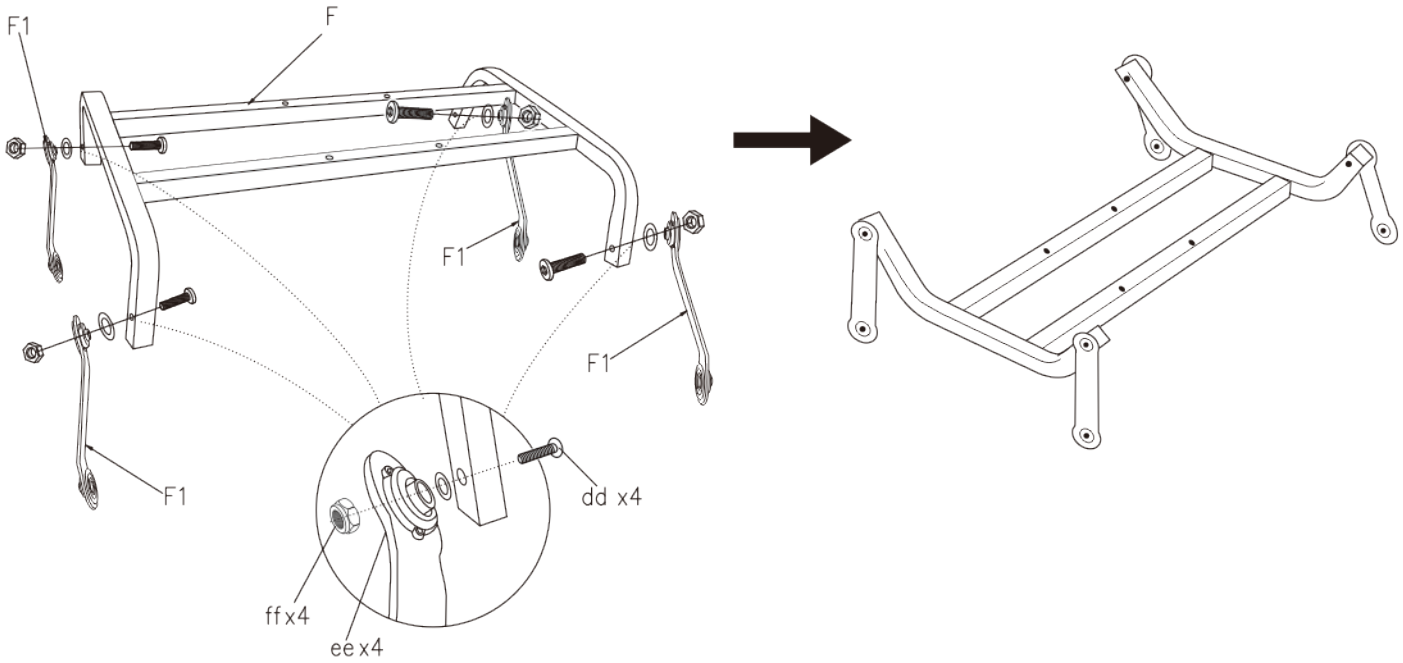

Step 1

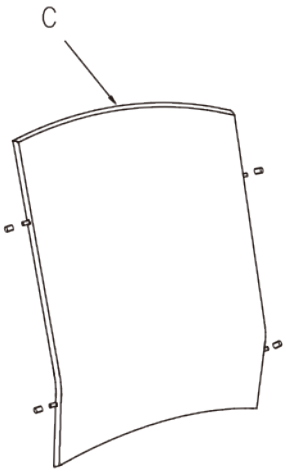

Pull out the rubber plug

Step 2

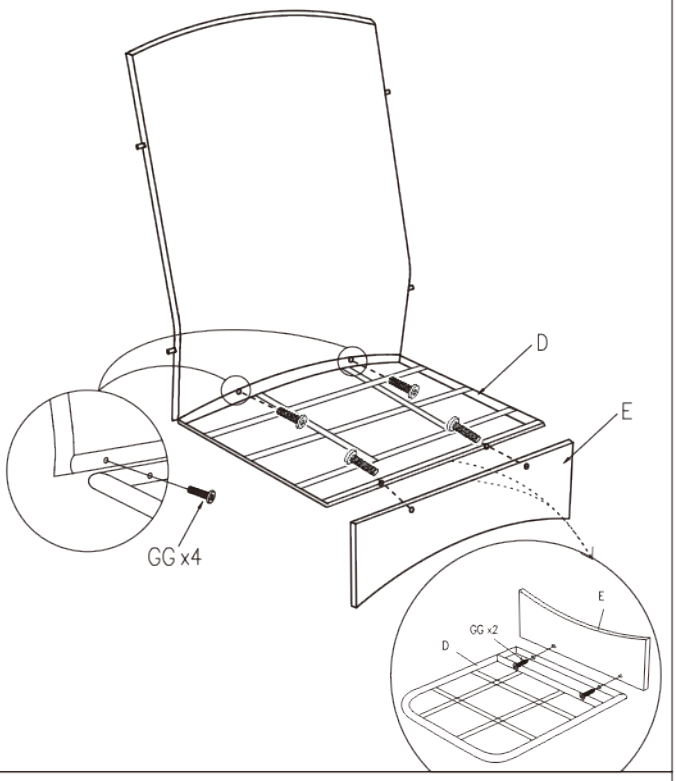

Step 3

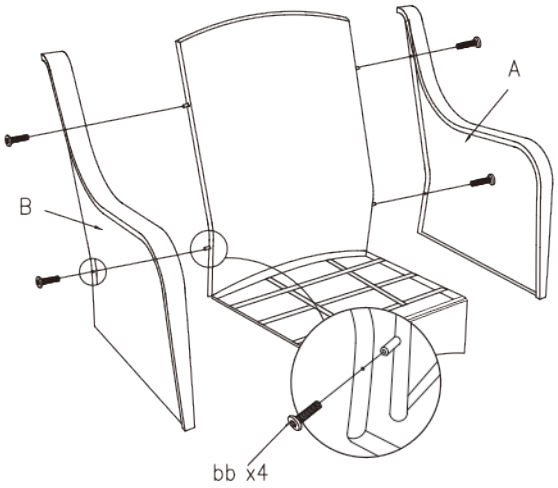

Tighten the screw on each side

Step 4

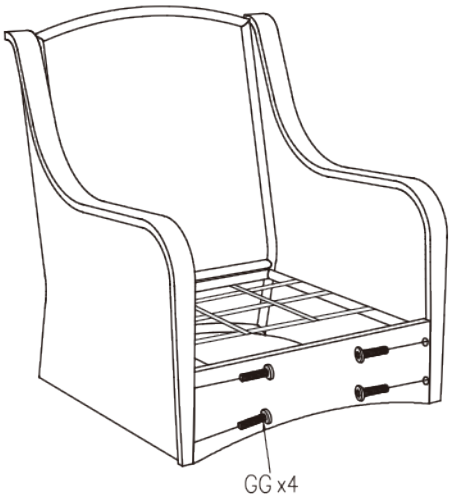

1. Recommend to use waterproof furniture cover for entire patio sofa set when out of use to keep them longer performance.
2. Sofa cushion cover can be removable and clean up by cleaner when have stains.

Step 5

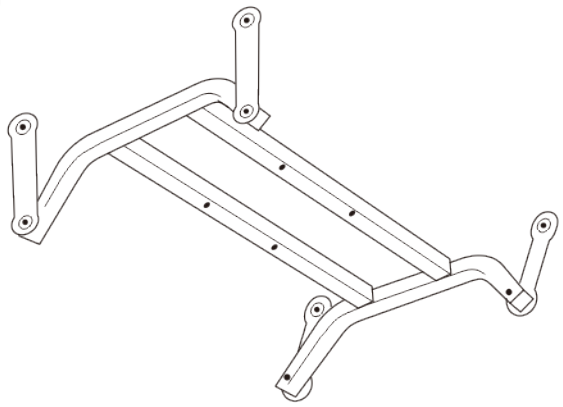

Put the baseplate as the picture shows

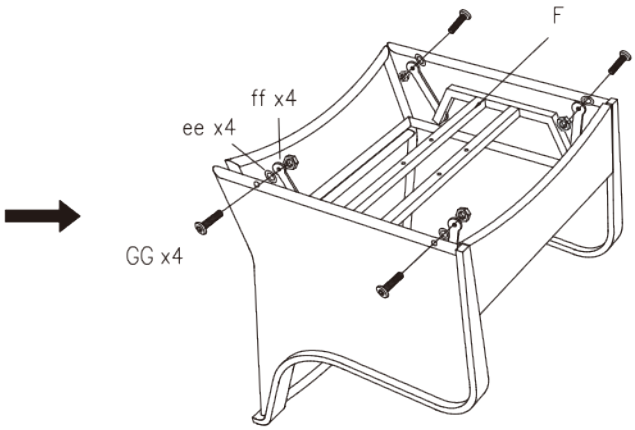

Turn over the chair base and tighten screws

Step 6

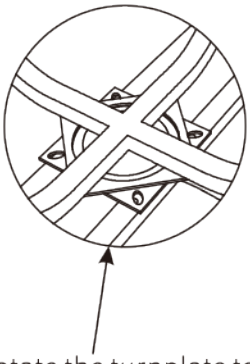

Rotate the turnplate to show screw hole

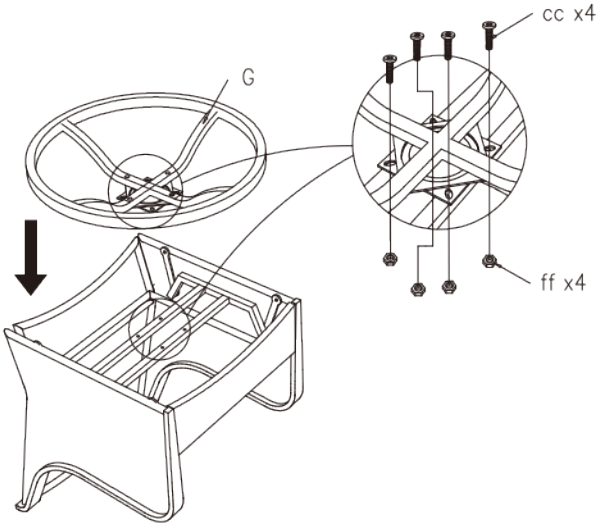

Step 7

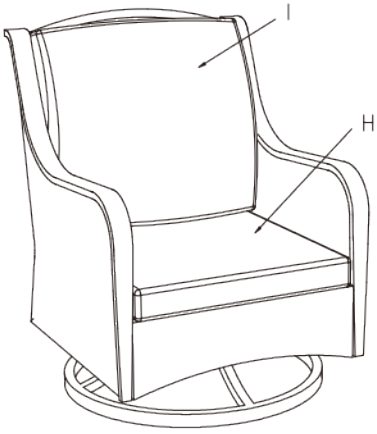

1. Recommend to use waterproof furniture cover for entire patio sofa set when out of use to keep them longer performance.
2. Sofa cushion cover can be removable and clean up by cleaner when have stains.

Step 1

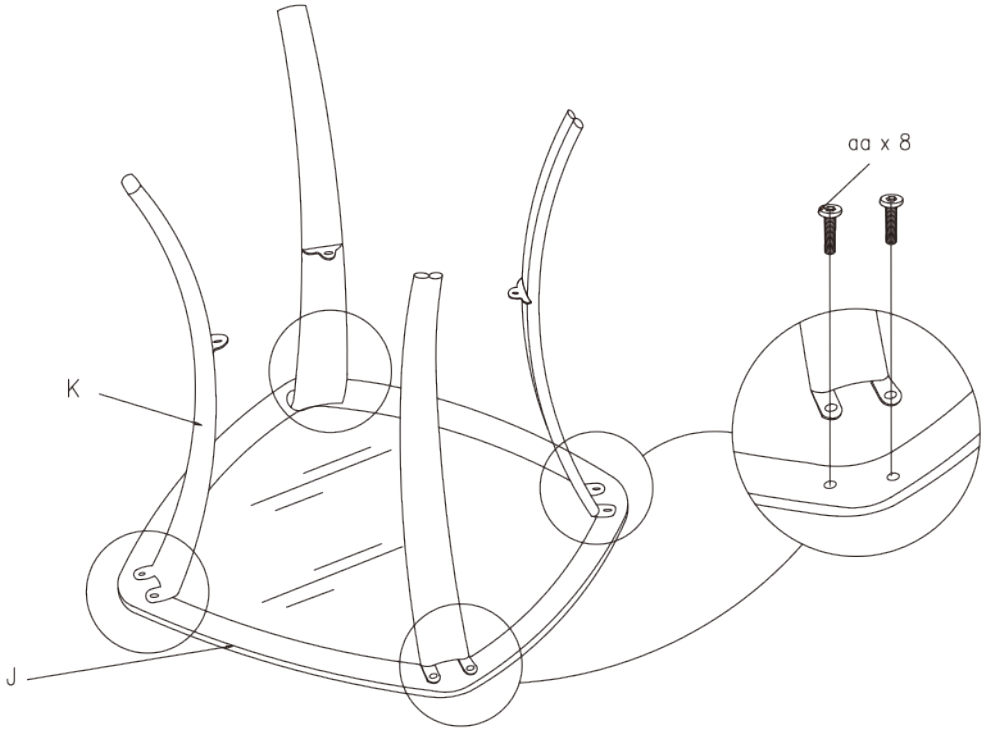

Step 2

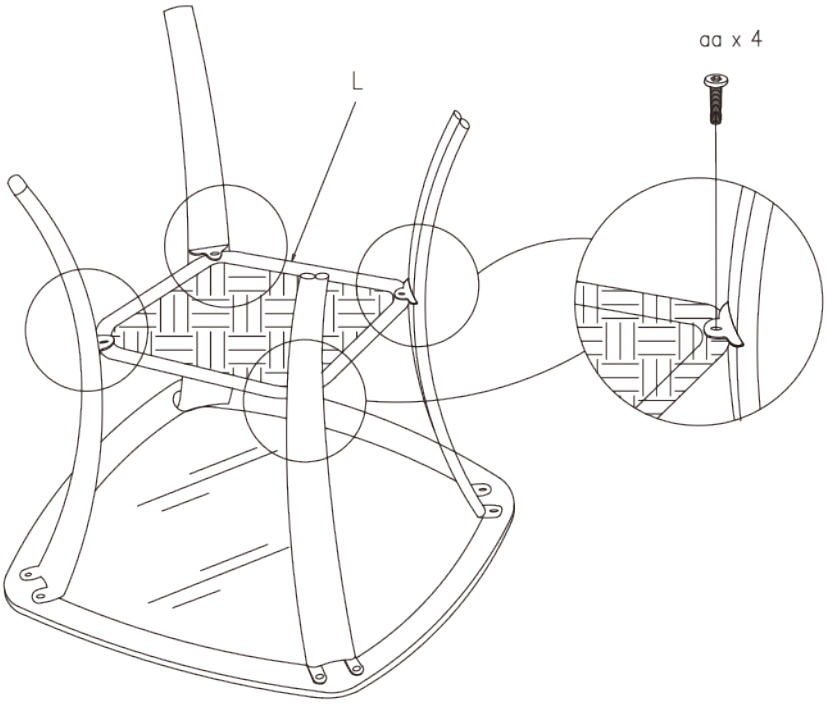

1. Recommend to use waterproof furniture cover for entire patio sofa set when out of use to keep them longer performance.
2. Sofa cushion cover can be removable and clean up by cleaner when have stains.

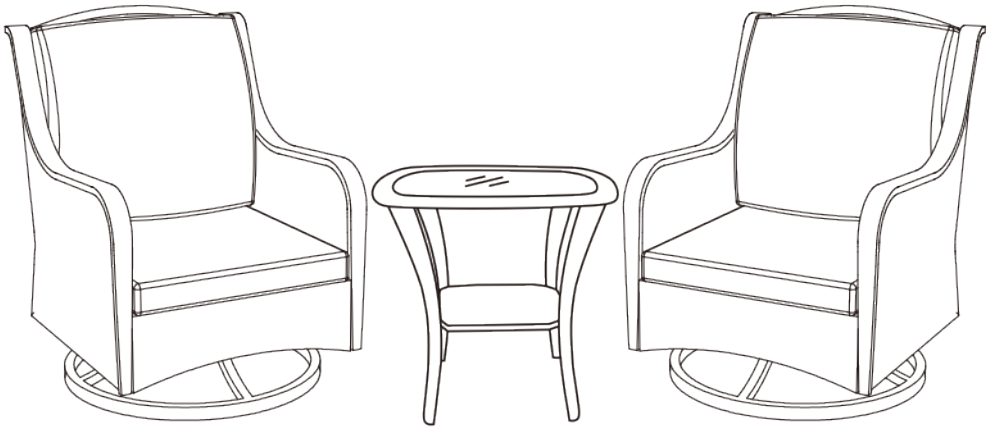

Note:Pls check and tighten all screws.

IMPORTANT SAFETY INFORMATION

Please carefully read the instructions and caution warnings below before assembling the product. Following this guide will ensure that you install, use and maintain the product properly.

- Please keep this installation and user manual/instructions for future reference in case you need to assemble the product.
- Do not assemble if you notice serious damage such as cracks or bends.
- During installation, please use work gloves for hand safety.
- Please assemble the unit on carpeted floor or the flat cardboard box to avoid scratching the surface or your floor while assembling on the floor.
- To assemble, please use the complimentary installation tools (Allen Wrench). Pay more attention to the direction of components at each steps.
- It is recommended that two people work together to assemble the product.
- Please do not tighten the screws up too much, just to 80% before you finish to make the installion go on successfully.

RETURN POLICY

We believe you will absolutely love your new product. But for some reason you want to return your item, please contact us within 30 days after receiving and ensure that the product which you want to return is in a good condition in the original box with all original certificates of purchase, manuals and accessories attached.

HOW TO MAINTAIN YOUR PRODUCT:

- Check the screws of the product are not loose from regular use.
- Do not use sharp instruments, rubbing alcohol, corrosive chemicals, or abrasive cleaners to clean the product.
- Do not keep the product in a damp environment for a long period of time. The damp environment may cause the iron components to rust and the plates to bulge and crack.

How to find us?

Customer Service

Email: support@garvee.com