Furniture of America®

Assembly Instructions

For more information contact our team: service.ec@foagroup.com

WI4154S

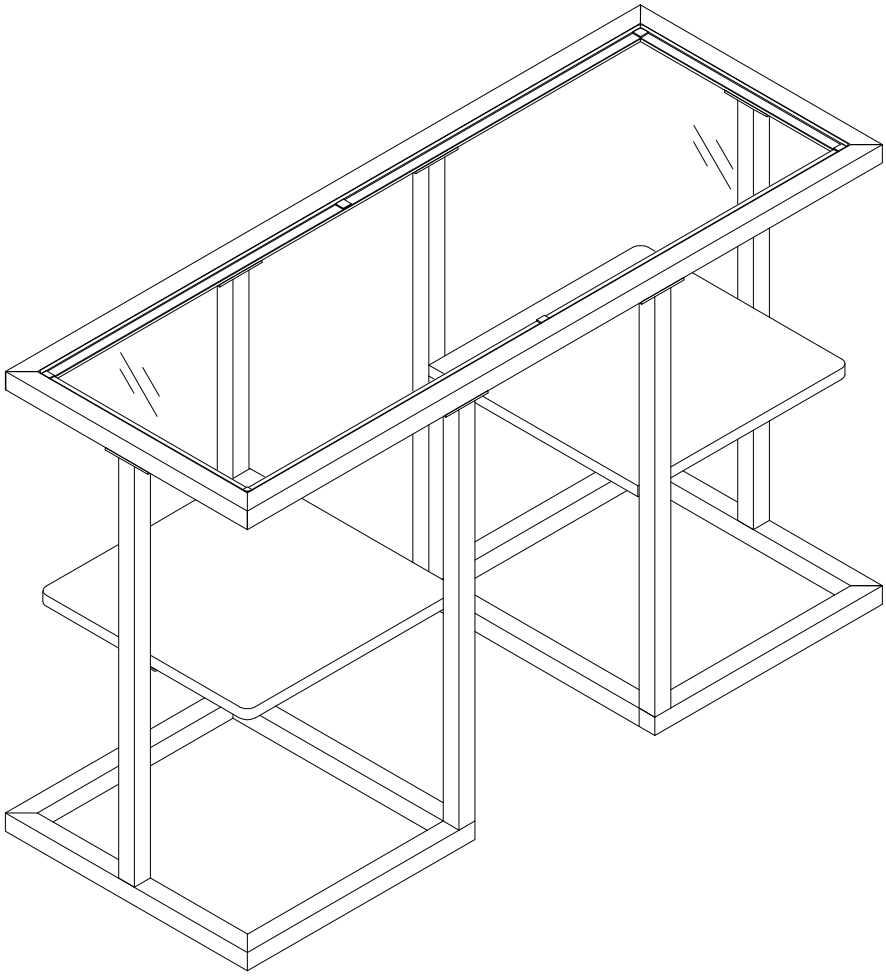

ASSEMBLY RATING

The Assembly Rating is a 5-point system that shows the degree of effort needed in assembling a specific product (with 1 being easy and 5 being difficult). For some products, two persons are recommended.

EASY ⬢ ⬢ ⬢ ⬡ ⬡ DIFFICULT

Tools Required For Assembly:

Allen Wrench

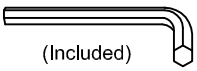

(Included)

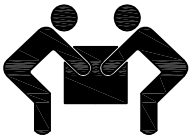

2 PERSONS RECOMMENDED

Rev: 18-03-13

Furniture of America®

ASSEMBLY & CARE ADVICE

FOR YOUR FURNITURE TO LAST,CORRECT ASSEMBLY AND PROPER MAINTENANCE ARE NECESSARY.
PLEASE FOLLOW THE INFORMATION PROVIDED BELOW TO FULLY ENJOY YOUR FURNITURE.

BASIC ASSEMBLY TECHNIQUES

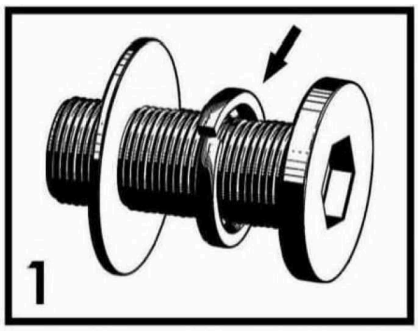

When lock or spring washer is used in an assembly, please make sure the lock or spring washer is placed between the larger flat washer and the head of the screw or bolt.

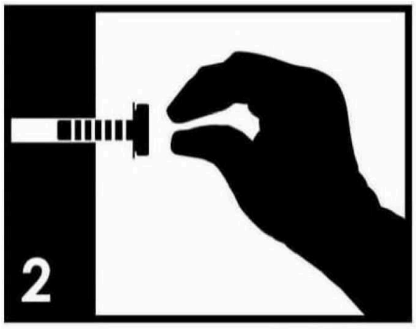

Position each part correctly and insert screws or bolts into their respective holes by hand tighten or using the proper hand tool. Only tighten when step is completed or when instructed to do so.

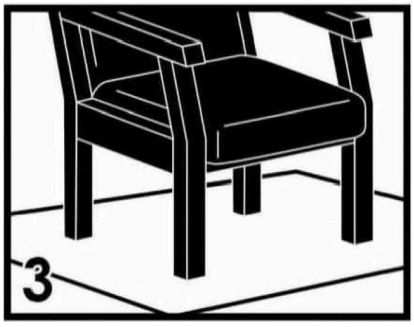

Use cardboard or carpet area when assembling furniture to prevent scratches . Make sure the furniture rests on a flat and level surface with each leg evenly touching the floor.

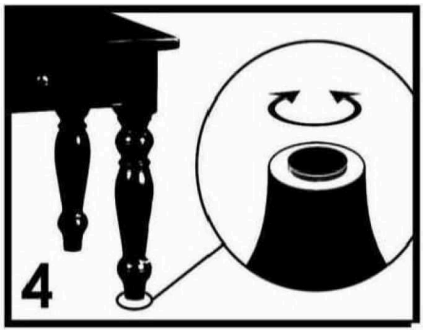

Some furniture comes with height adjustment knobs underneath each leg. To lower or to raise each leg, you need to turn clockwise or counterclockwise, respectively.

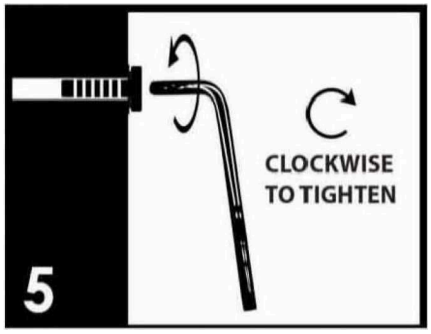

Make sure all parts are properly aligned, then use the appropriate hand tool to completely tighten the bolts or screws. Do not use power tools and do not overtighten.

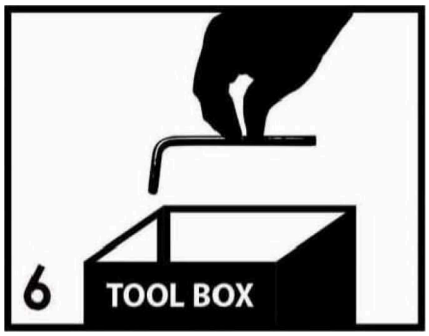

Save the instructions and store the Allen wrench or any supplied tool for later maintenance. After two weeks, check and tighten any loose hardware and repeat again every six months thereafter.

IT IS THE USER'S RESPONSIBILITY TO MAINTAIN THE FURNITURE.THE HARDWARE MAY LOOSEN OVER TIME AND MAY CAUSE THE FURNITURE TO BE WOBBLY AND UNABLE TO SUPPORT ITS INTENDED WEIGHT CAPACITY. THIS MAY LEAD TO COLLAPSE AND MAY CAUSE SERIOUS INJURY.

FAILURE TO FOLLOW THE GUIDELINES ABOVE MAY RESULT IN INJURY AND/OR PROPERTY DAMAGE.

FURNITURE OF AMERICA.ALL RIGHTS RESERVED.

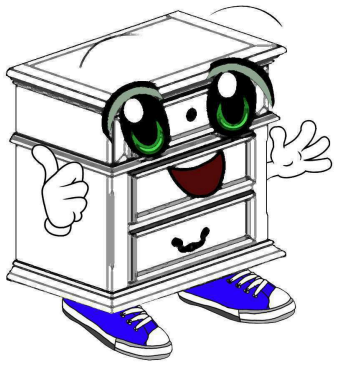

Before you begin, please read Page 2 of "Assembly and Care Advice".

And remember, do not tighten until each step is completed or instructed.

Parts List

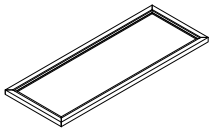

#1 x 1pc
Top Frame

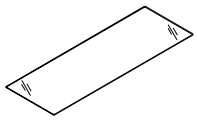

#2 x 1pc
Top Glass

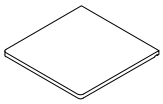

#3 x 2pcs
Shelf

#4 x 4pcs
Middle Support

#5 x 2pcs
Side Support

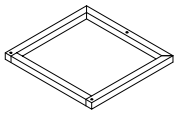

#6 x 2pcs
Bottom Frame

Hardware List

#A x 12pcs
Bolt 1/4" X 5/8"

#B x 2pcs
Bolt 1/4" X 5/8"

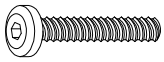

#C x 6pcs
Bolt 1/4" X 2"

#D x 4pcs
Adjustable Foot

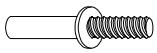

#E x 4pcs
Shelf Support

#F x 1pc
Allen Wrench M4

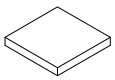

#G x 6pcs
Pad

Exploded View

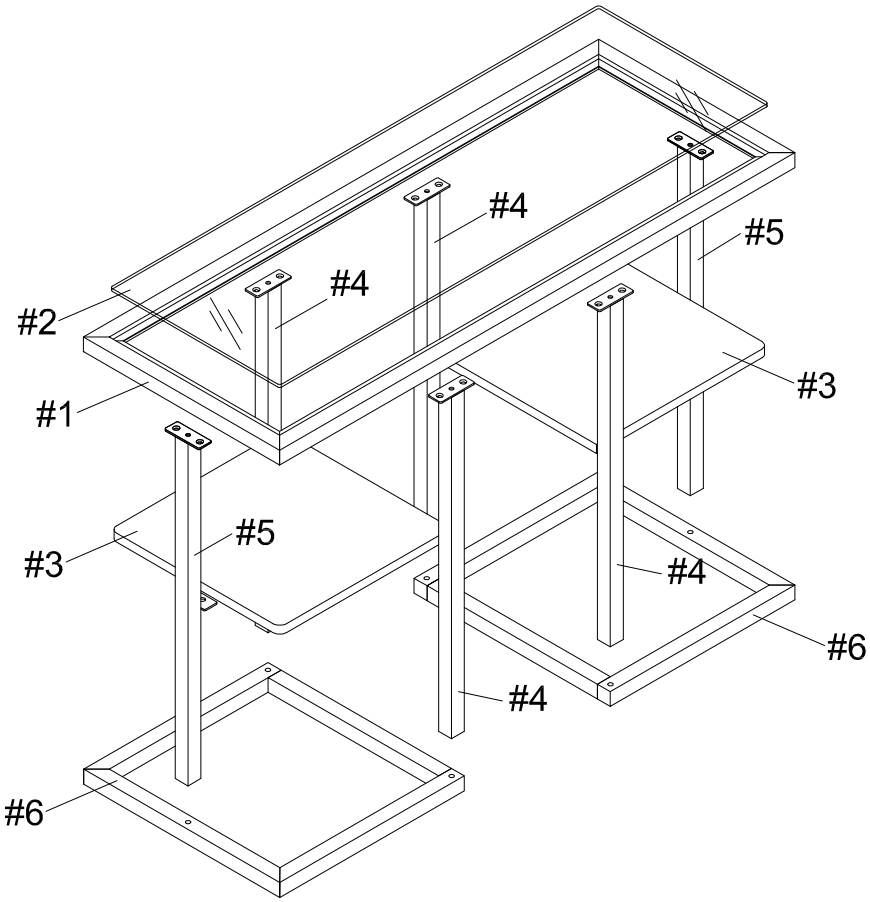

Align middle and side supports (#4,5) to the holes of the top frame (#1), then secure by using bolts (#A).

#A x 12pcs

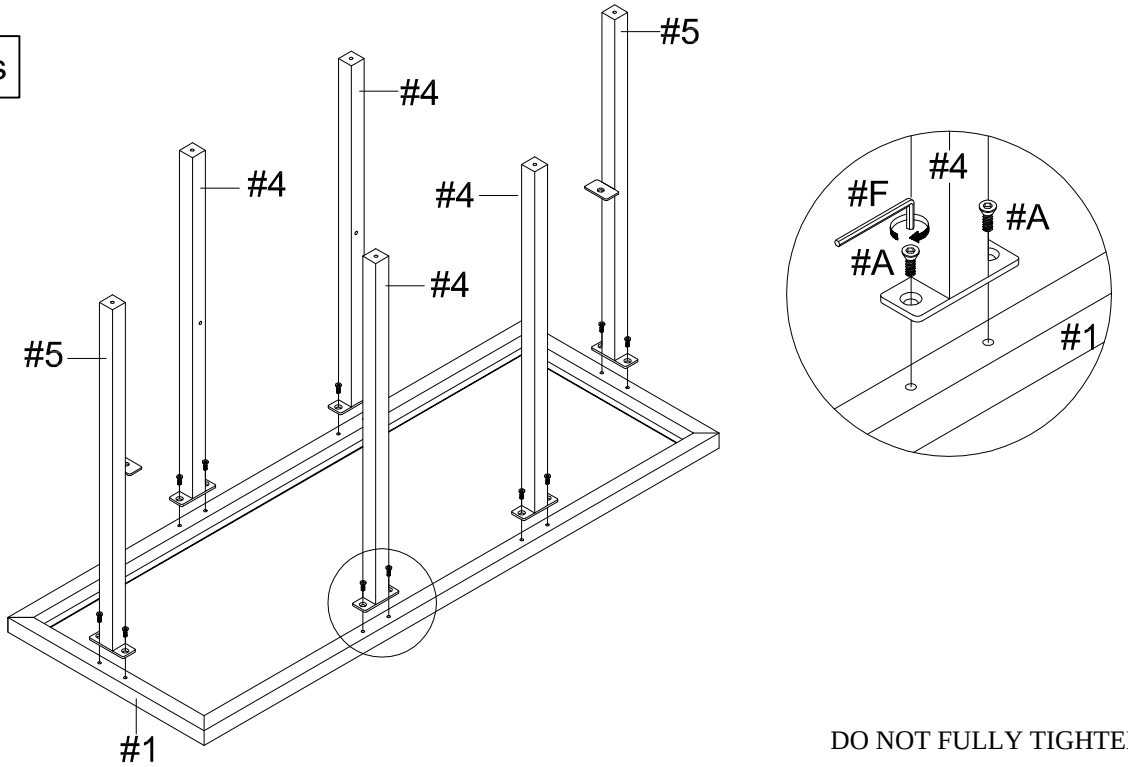

DO NOT FULLY TIGHTEN ALL BOLTS UNTIL STEP 5.

#C x 6pcs
#D x 4pcs

1) Align bottom frame to the supports (#4,5), then secure by using bolts (#C).

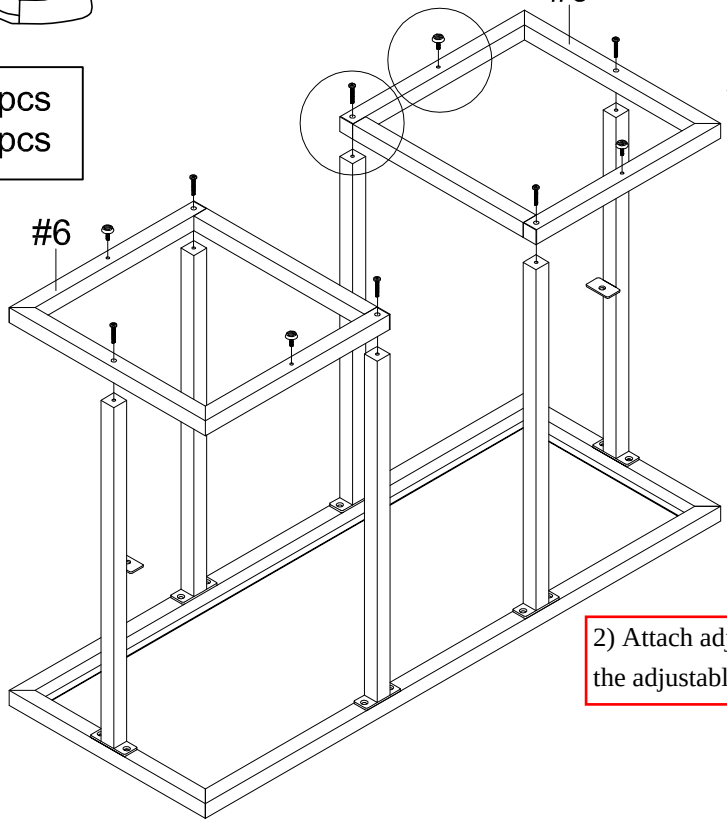

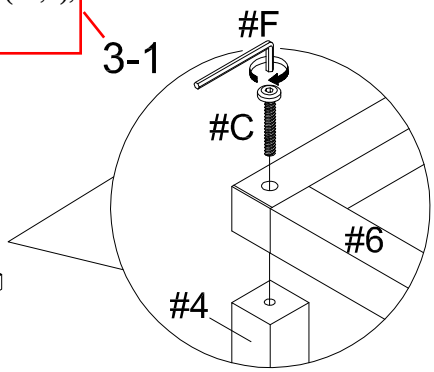

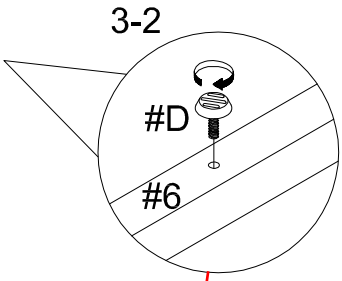

2) Attach adjustable feet (#D) to the bottom frame (#6). Adjust the adjustable feet (#D) according to ground level.

#B x 2pcs
#E x 4pcs

1) Attach shelf supports (#E) to the holes of the supports (#4,5).

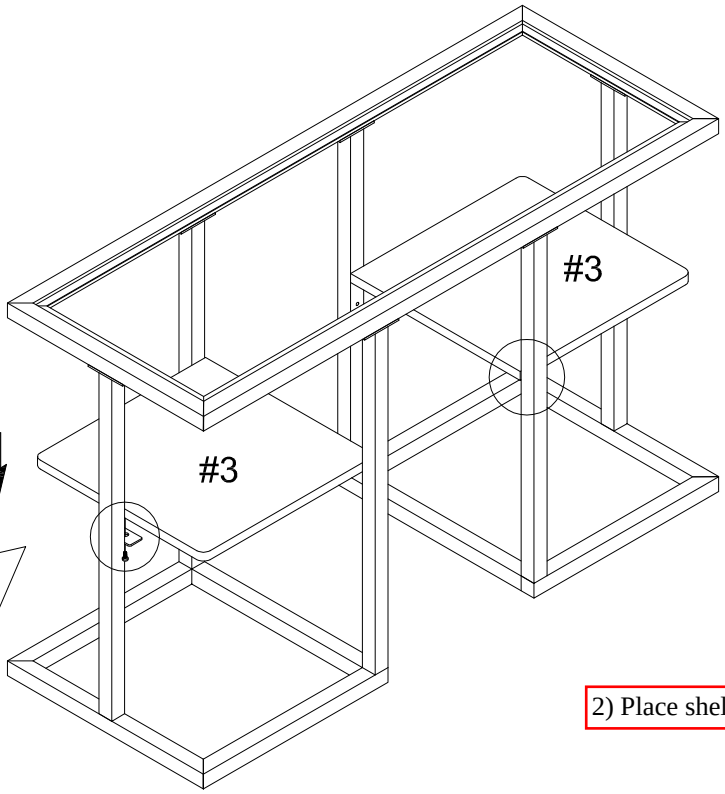

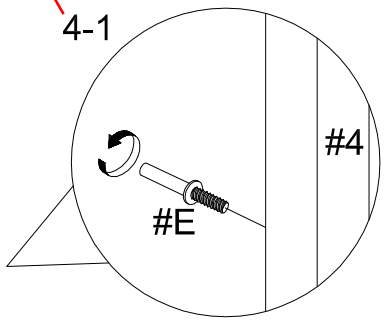

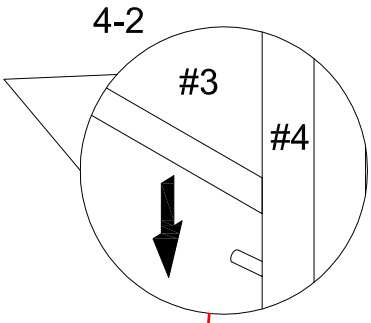

2) Place shelves (#3) onto the shelf supports (#E).

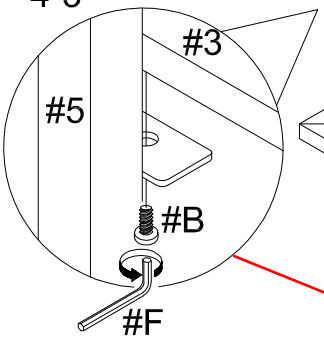

3) Secure shelves (#3) by using bolts (#B).

#G x 6pcs

Attach pads (#G) along the top frame of the unit, then carefully place glass (#2) onto the top frame.

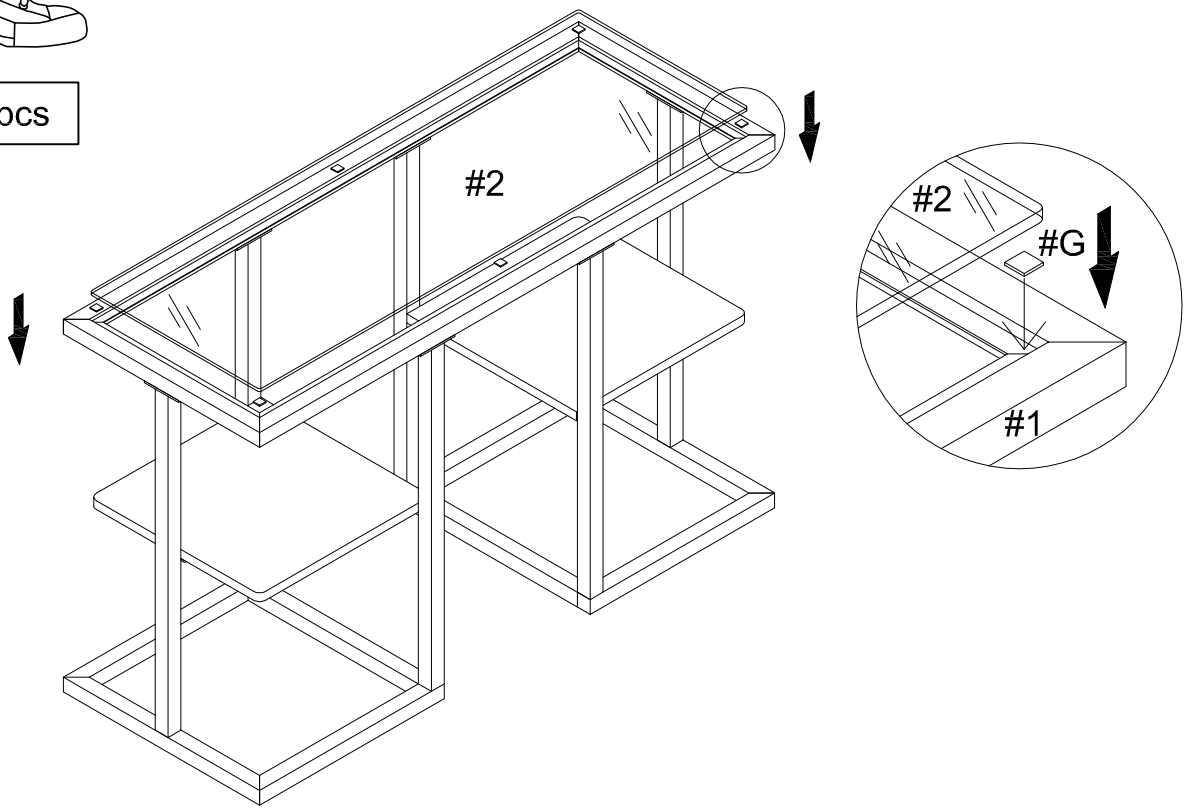
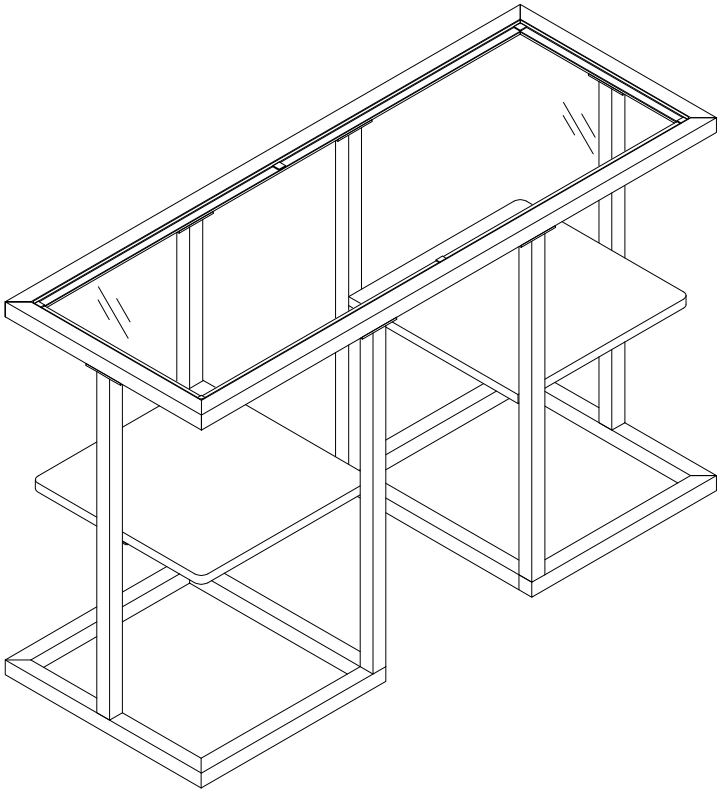
ASSEMBLY COMPLETED