# Assembly Instruction

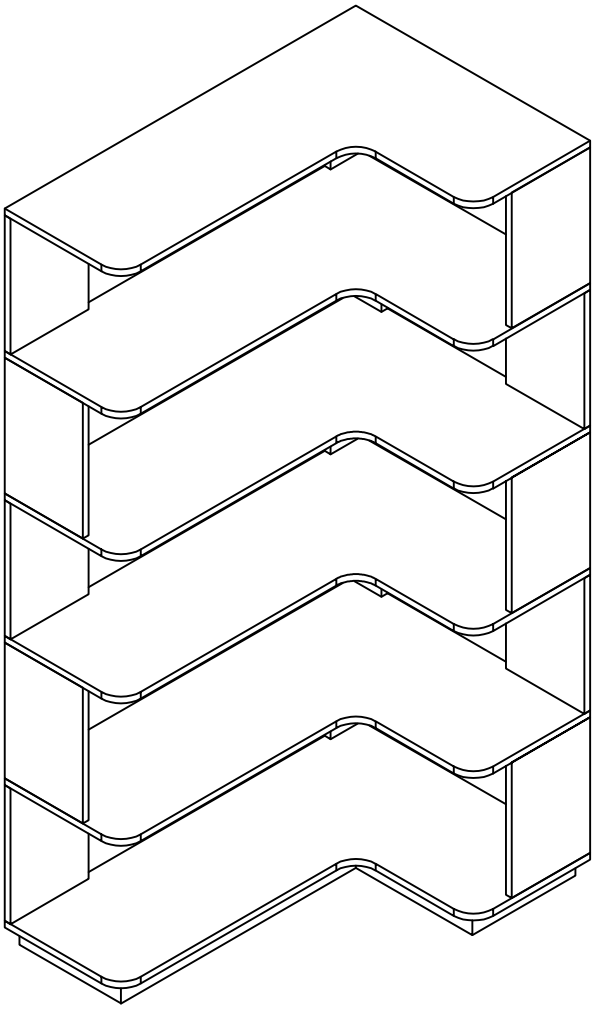

MADE IN CHINA

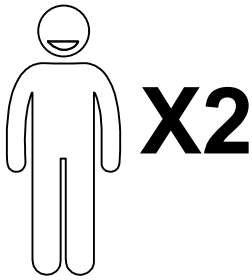


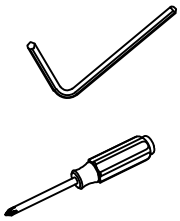

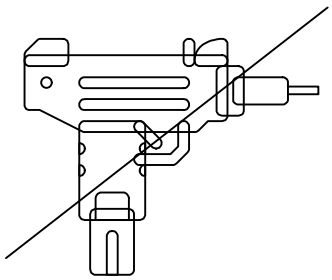

We recommend using hand tools for assembly.

If an electric screwdriver is used, reduce power and torque to avoid damage to the product.

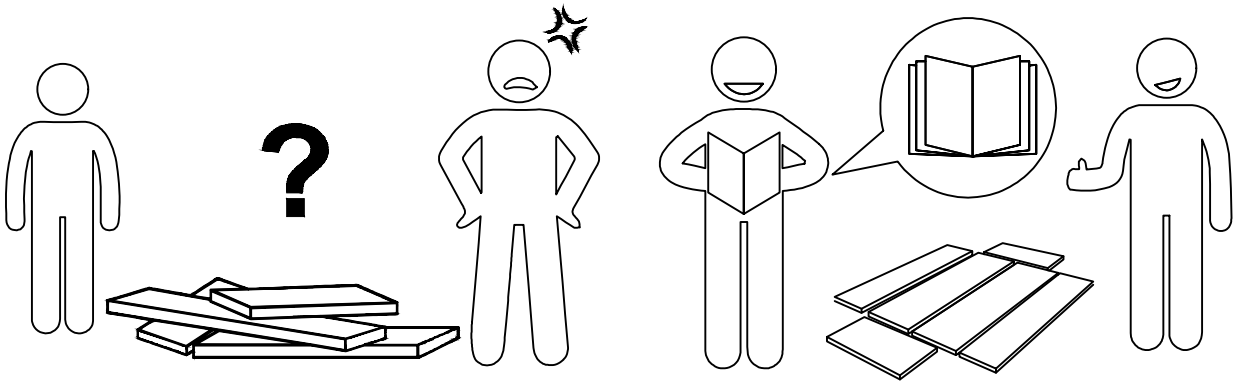


## Install the Anti-Tip Straps

Using the anti-tip straps can reduce the risk of tipping over but can not eliminate it.

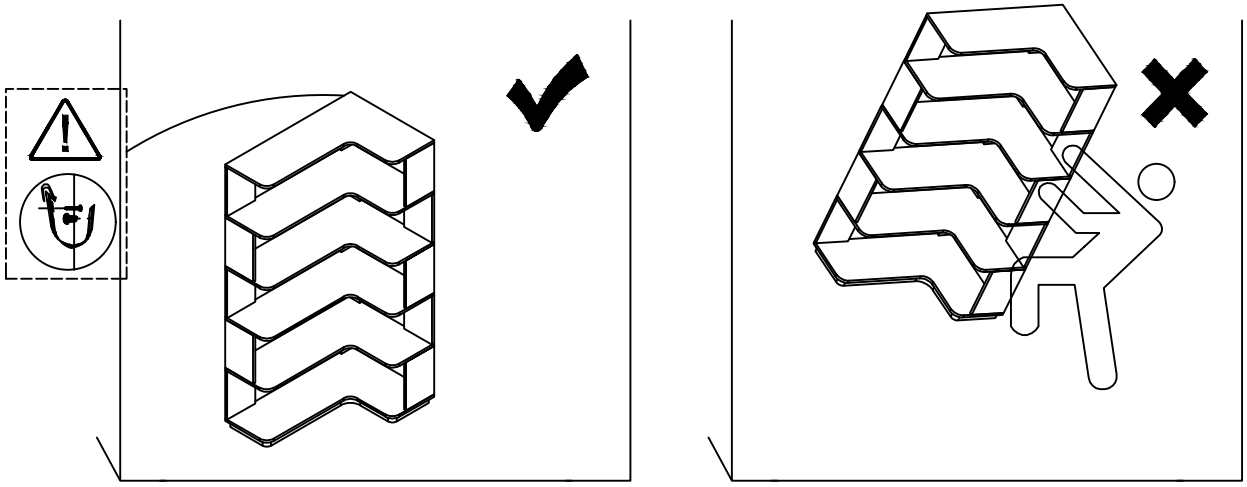

## Installation of Cams and Pins

Screw the pin into the hole. To set the cams correctly, ensure that the arrow on the cam is opening to the hole of the pin it is locking. Lock the cam by turning the cam head with a screwdriver until it is tightened. Please do not use an electric screwdriver to assemble the unit.

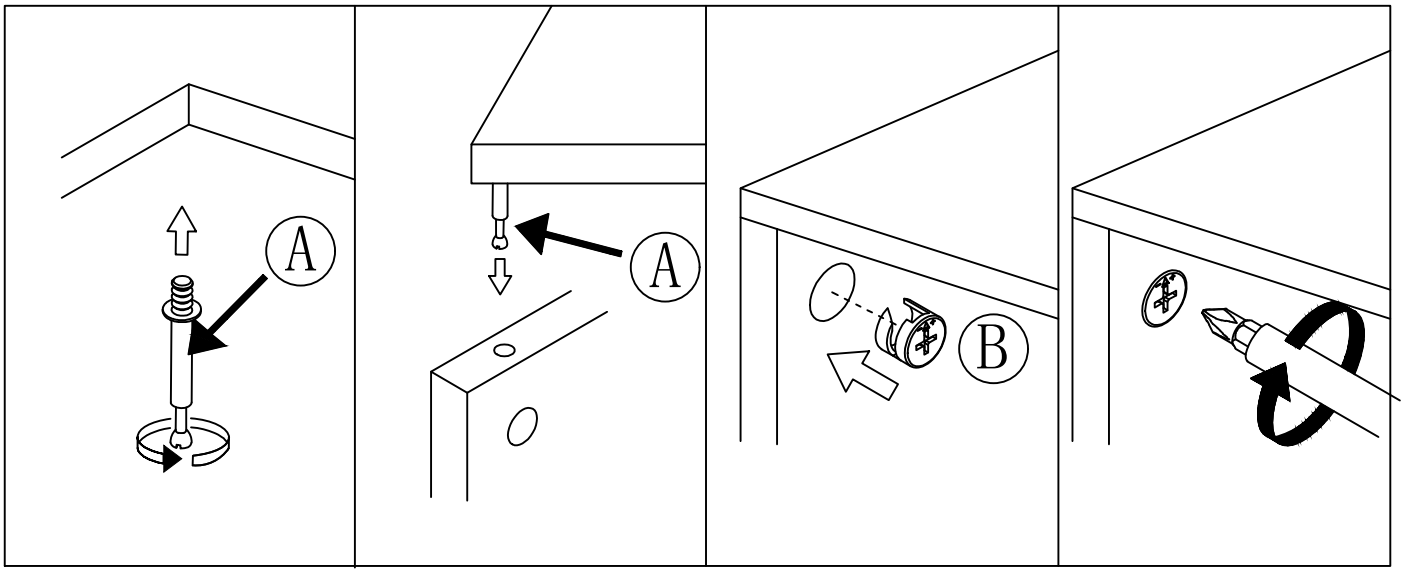


Read each step carefully before starting. It is very important that each step of instruction is performed in the correct order. If these steps are not followed in sequence, assembly difficulties will occur.

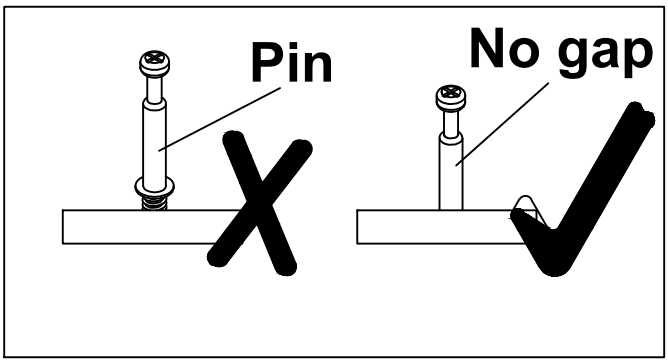

# ASSEMBLY INSTRUCTION

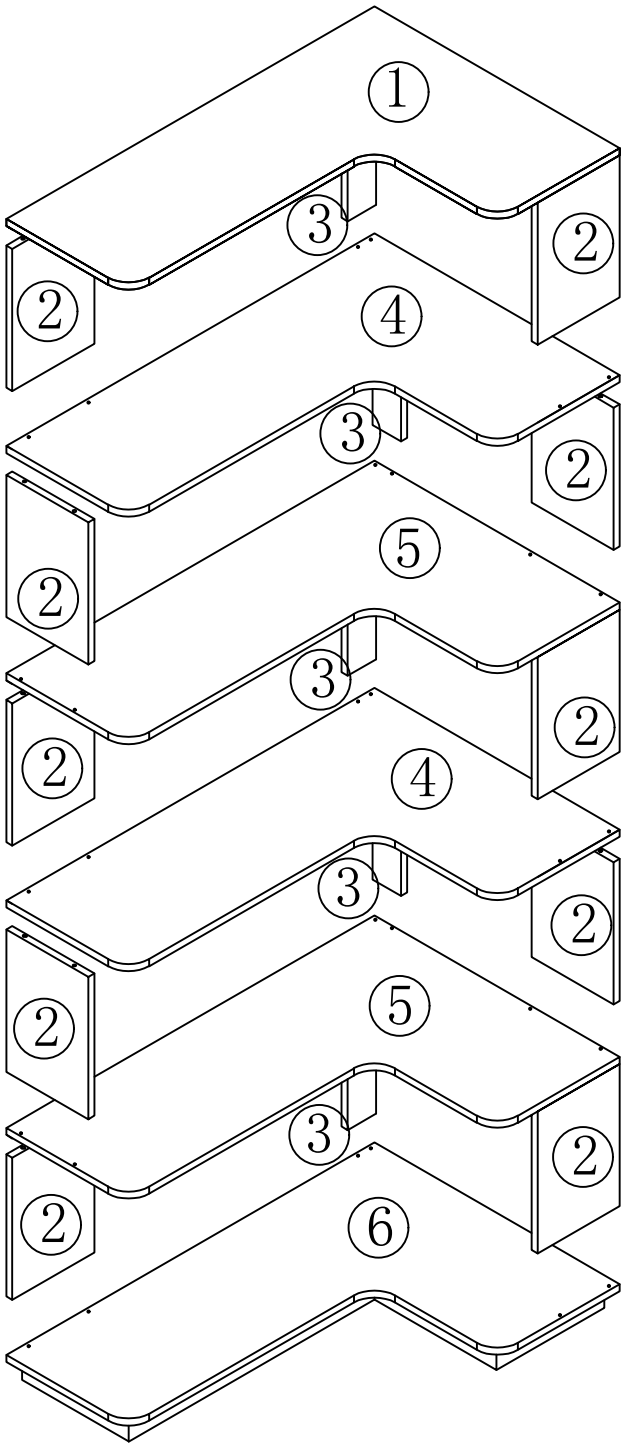

# Part List

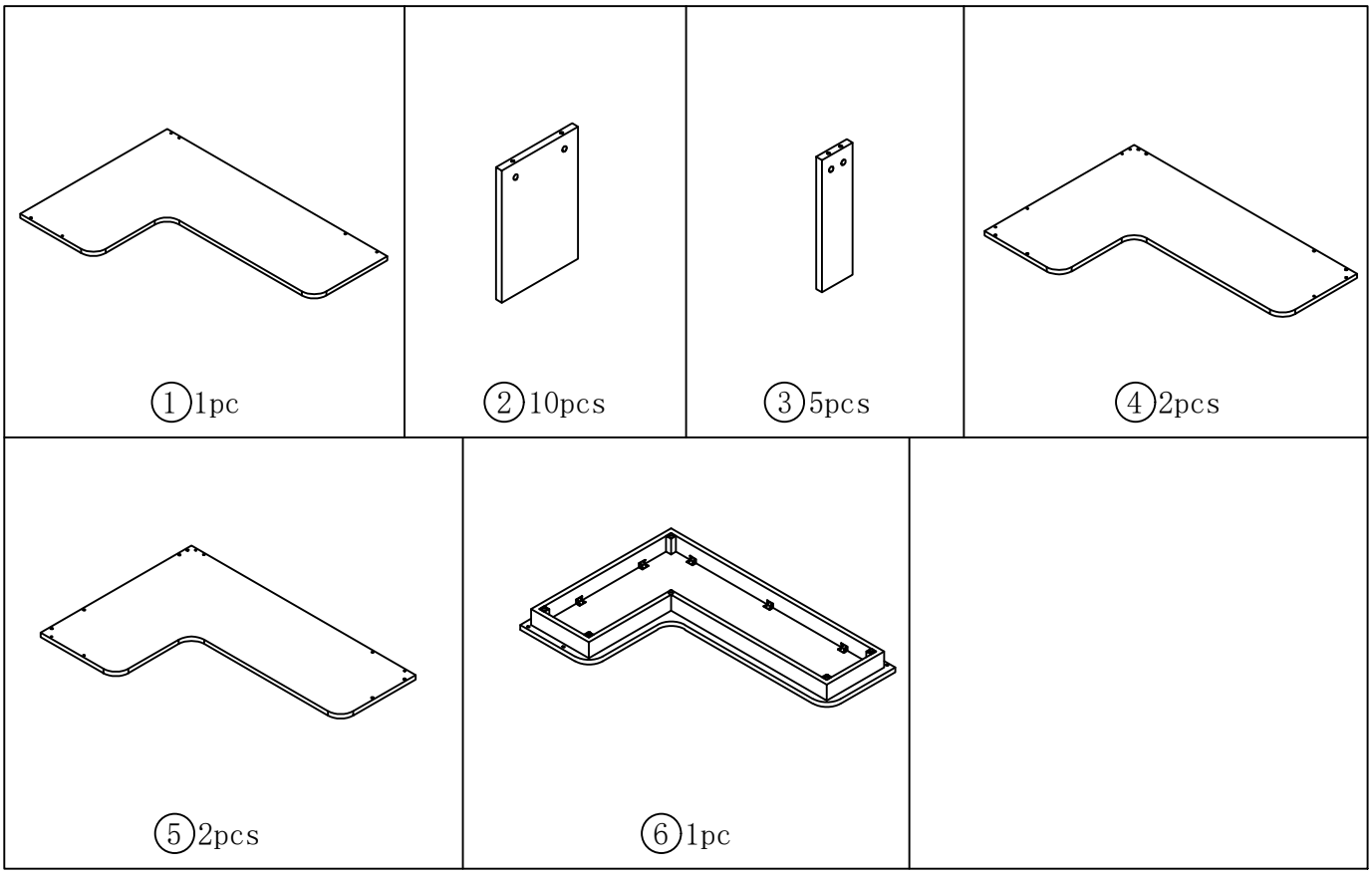


# Hardware List

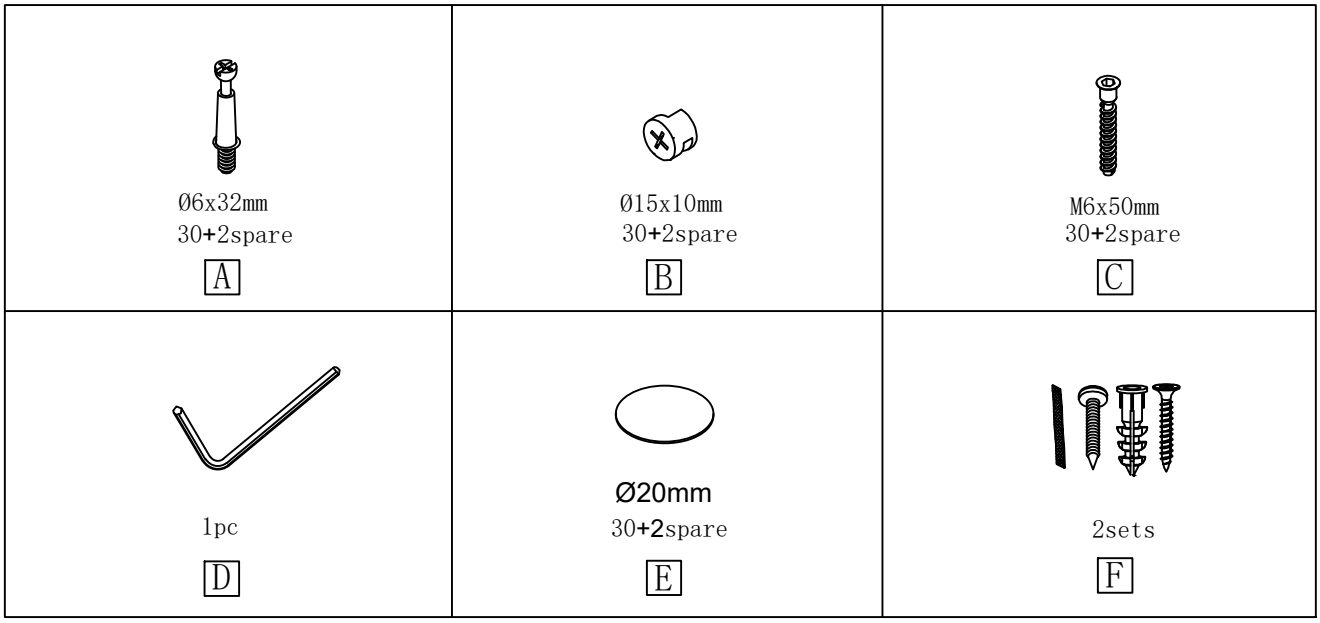


MADE IN CHINA

STEP 1

| | | |
|---|---|---|
| A: | 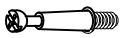 | 6PCS |
| B: |  | 6PCS |

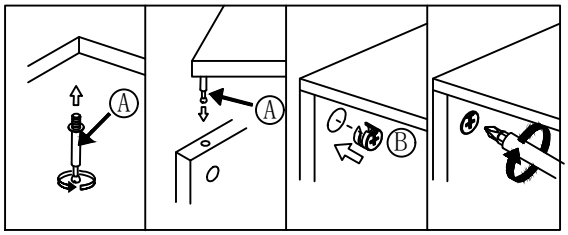


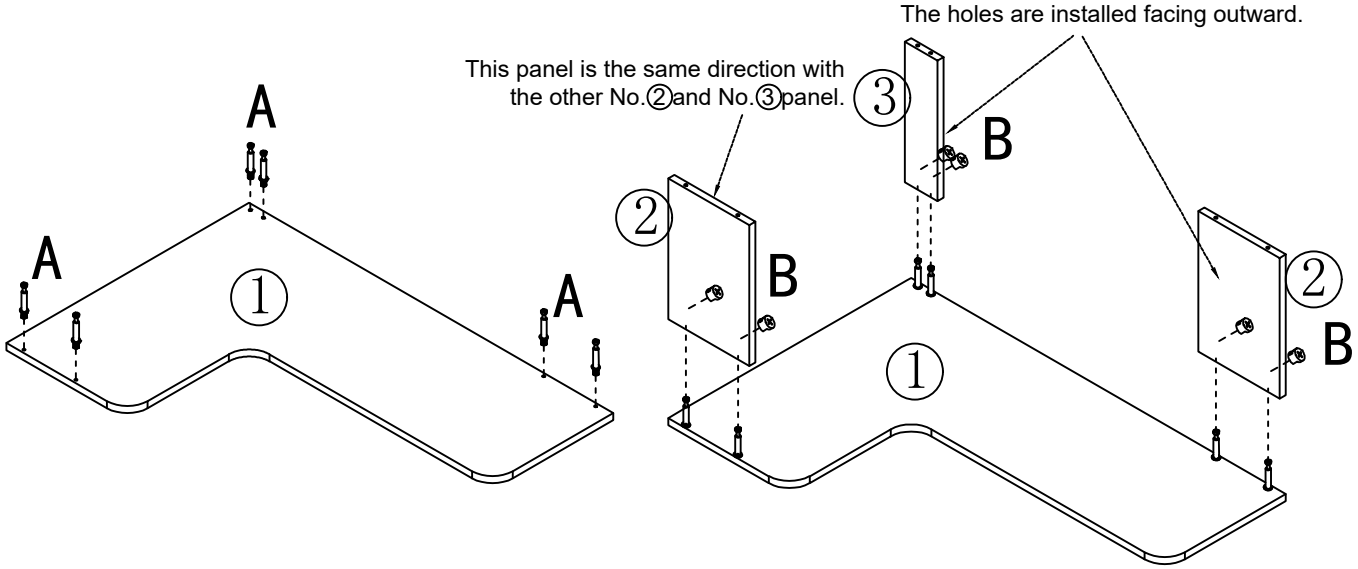


STEP 2

| | | |
|---|---|---|
| C: |  | 6PCS |
| D: | 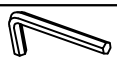 | 1PC |

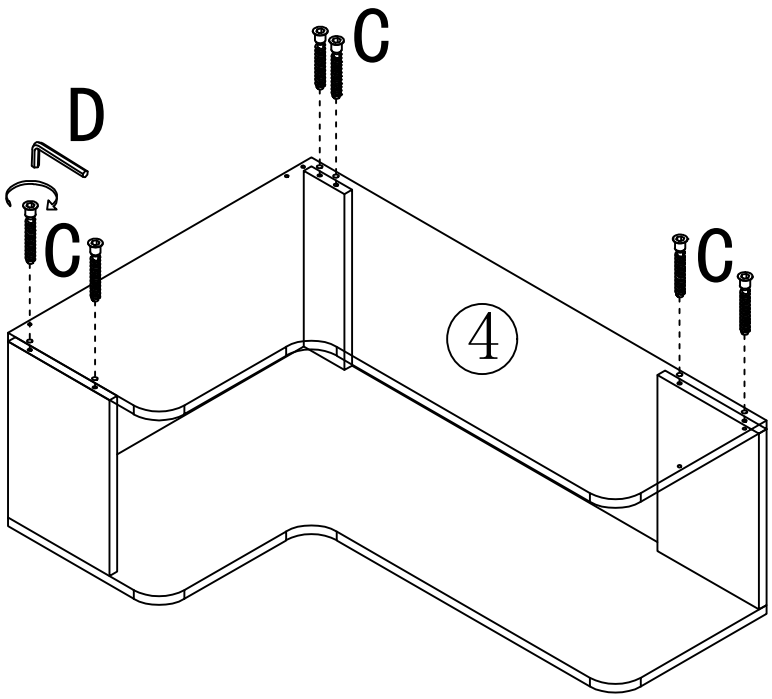


MADE IN CHINA

STEP 3

| | |
|---|---|
| A: | 6PCS |
| B: | 6PCS |

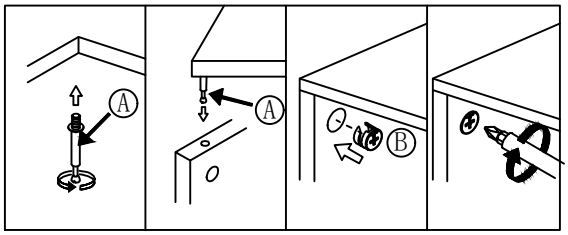


The holes are installed facing outward.

This panel is the same direction with the other No.②and No.③panel.

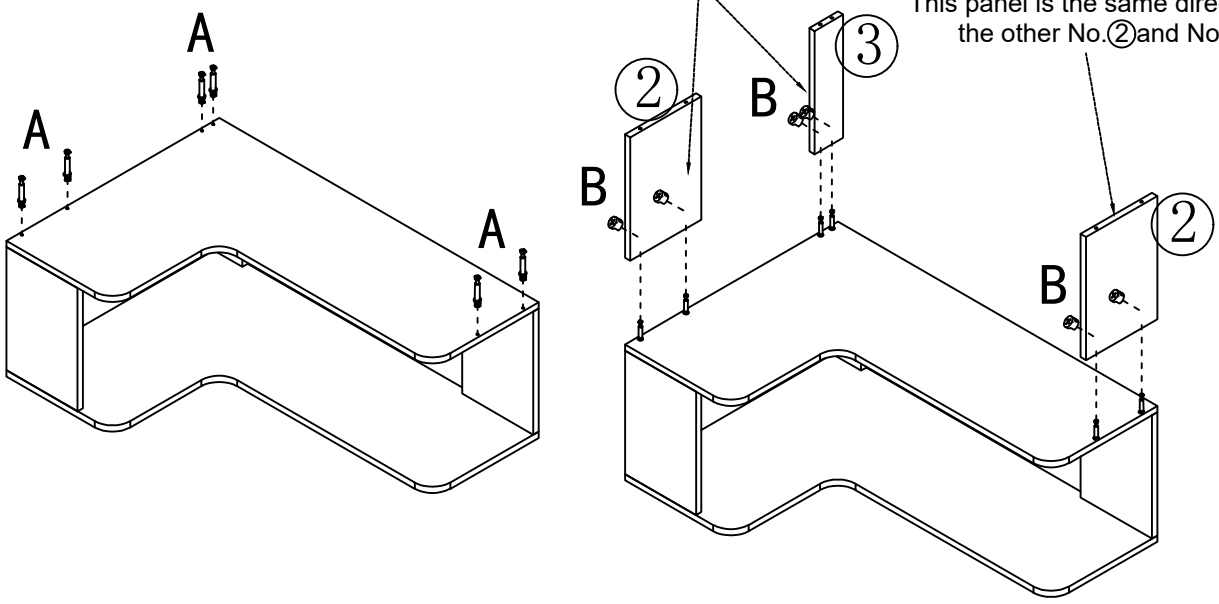


STEP 4

| | |
|---|---|
| C: | 6PCS |

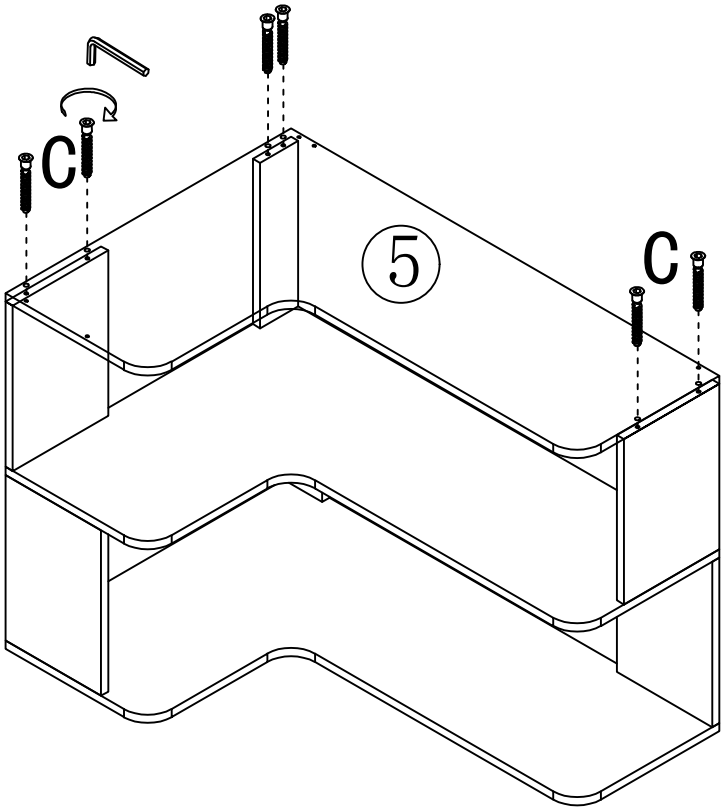


MADE IN CHINA

STEP 5

| | | |
|---|---|---|
| A: | 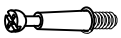 | 6PCS |
| B: |  | 6PCS |

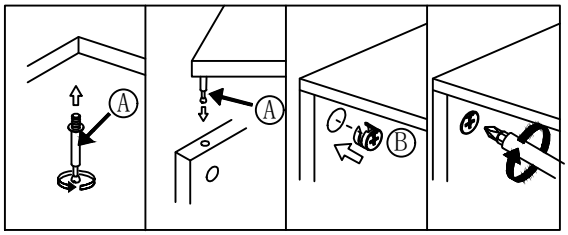


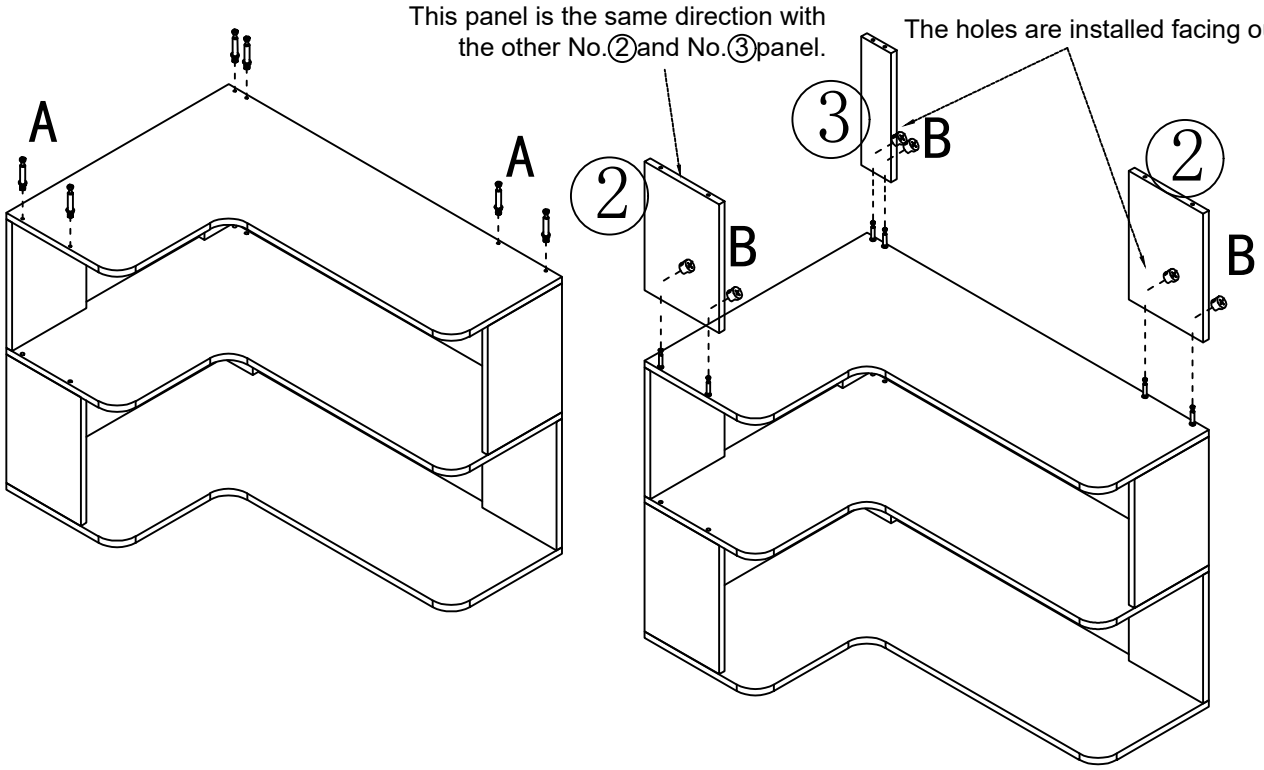


STEP 6

| | | |
|---|---|---|
| C: |  | 6PCS |

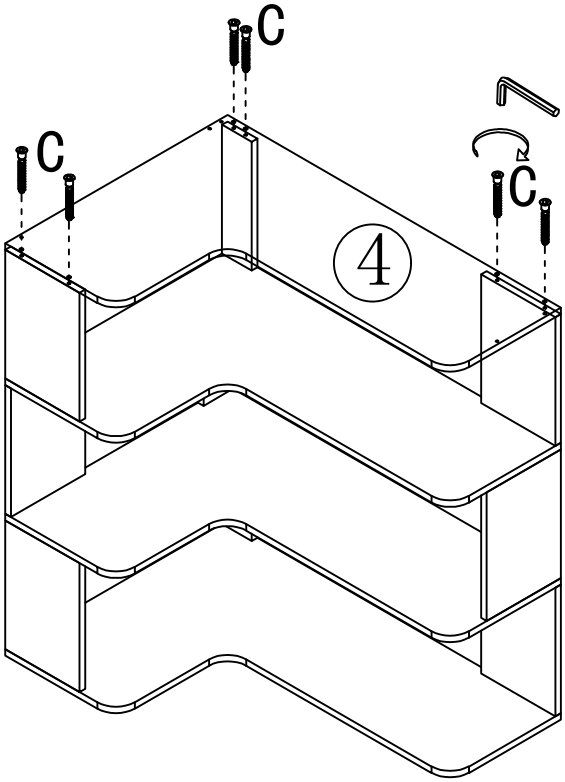


MADE IN CHINA

STEP 7

| | | |
|---|---|---|
| A: | 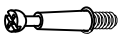 | 6PCS |
| B: |  | 6PCS |

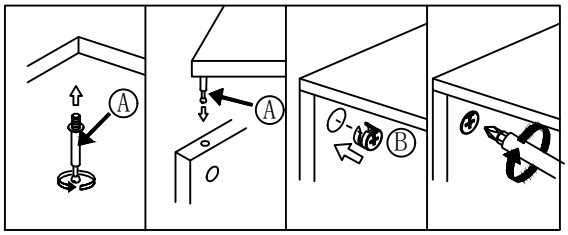


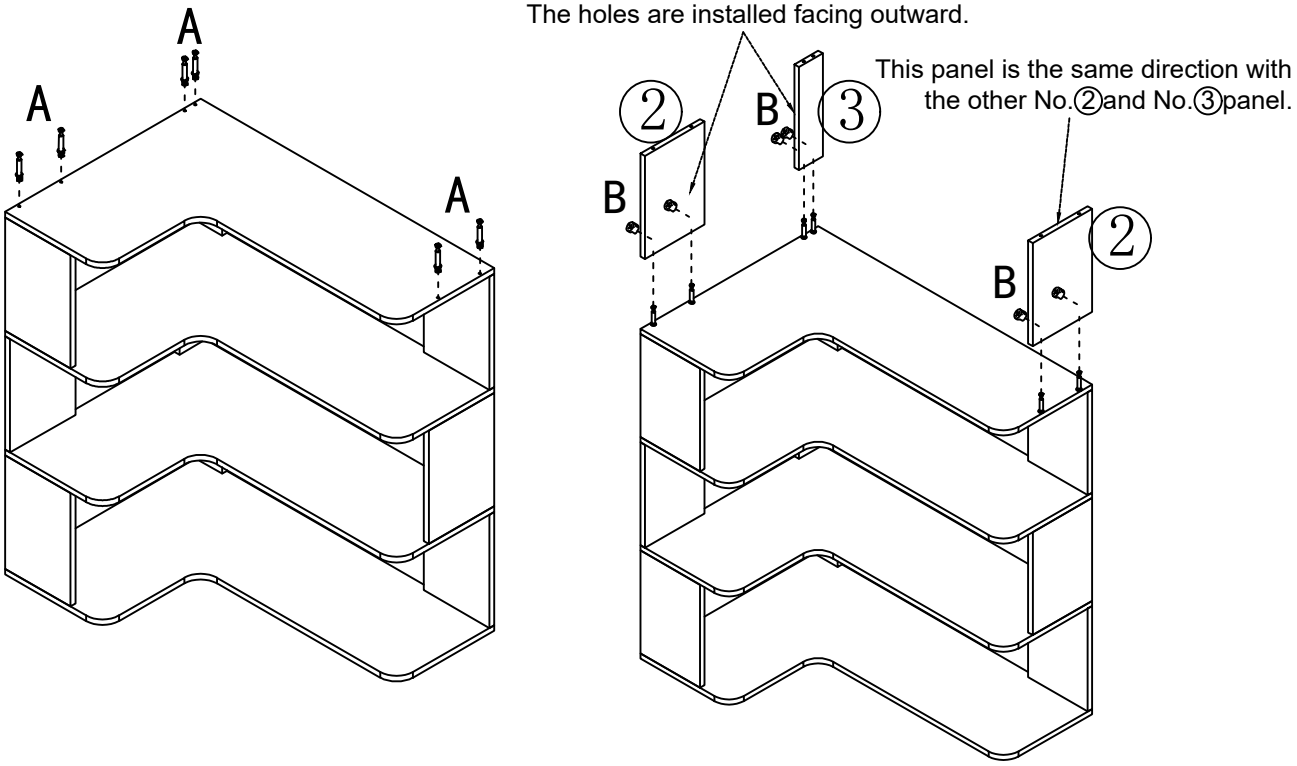


STEP 8

| | | |
|---|---|---|
| C: | 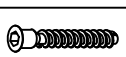 | 6PCS |

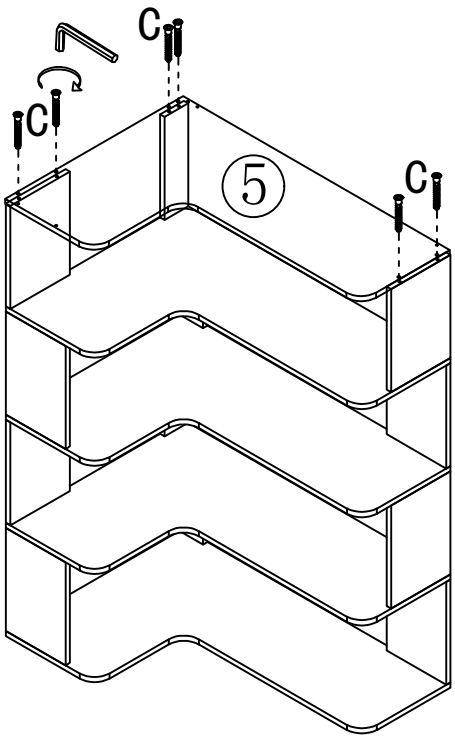


MADE IN CHINA

STEP 9

| | | |
|---|---|---|
| A: | 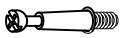 | 6PCS |
| B: |  | 6PCS |

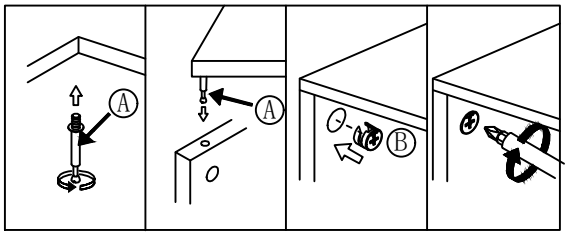


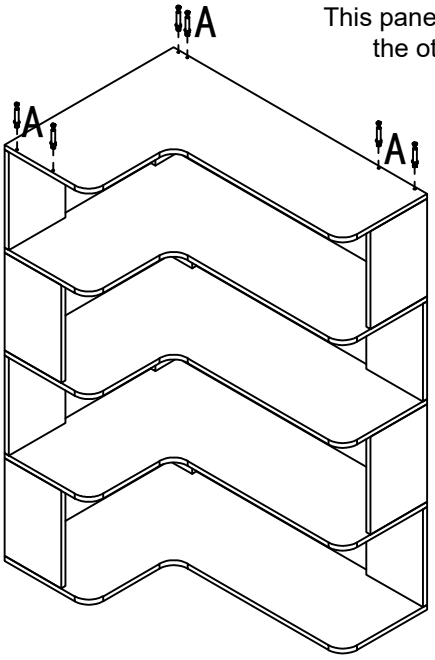


This panel is the same direction with the other No.②and No.③panel.

The holes are installed facing outward.

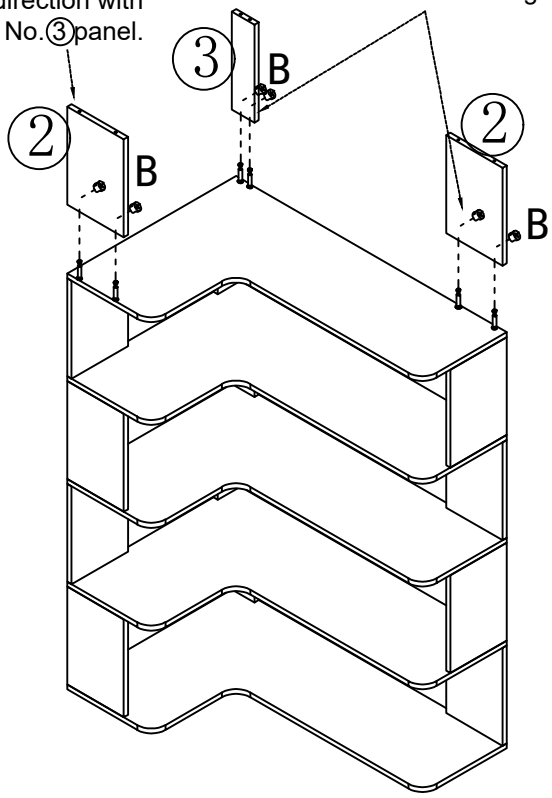


STEP 10

| | | |
|---|---|---|
| C: |  | 6PCS |

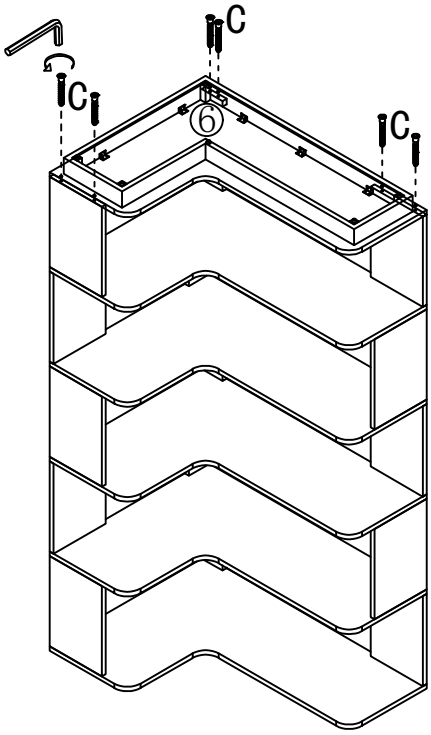


MADE IN CHINA

STEP 11

E: 30PCS

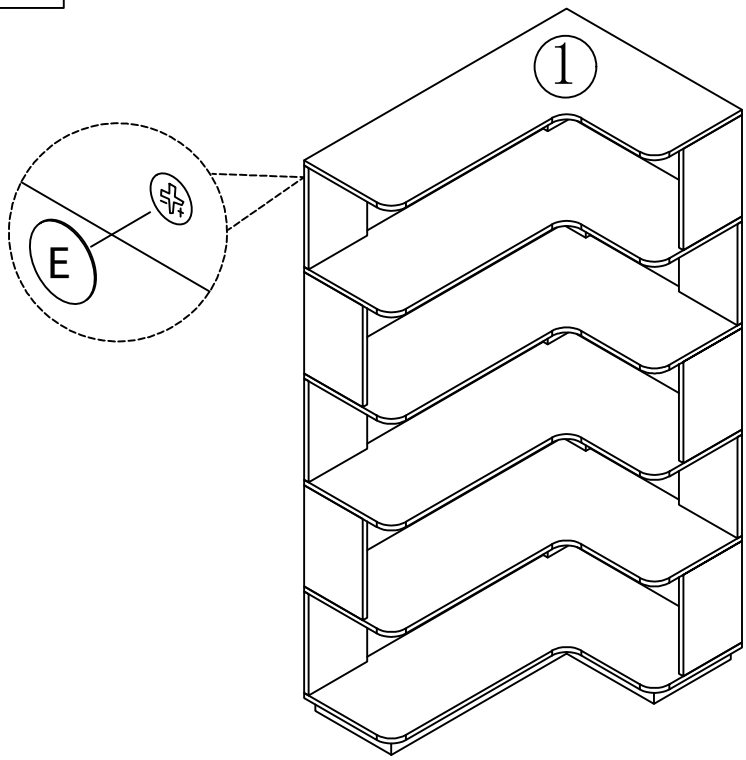


STEP 12

F: 2SET

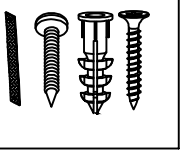

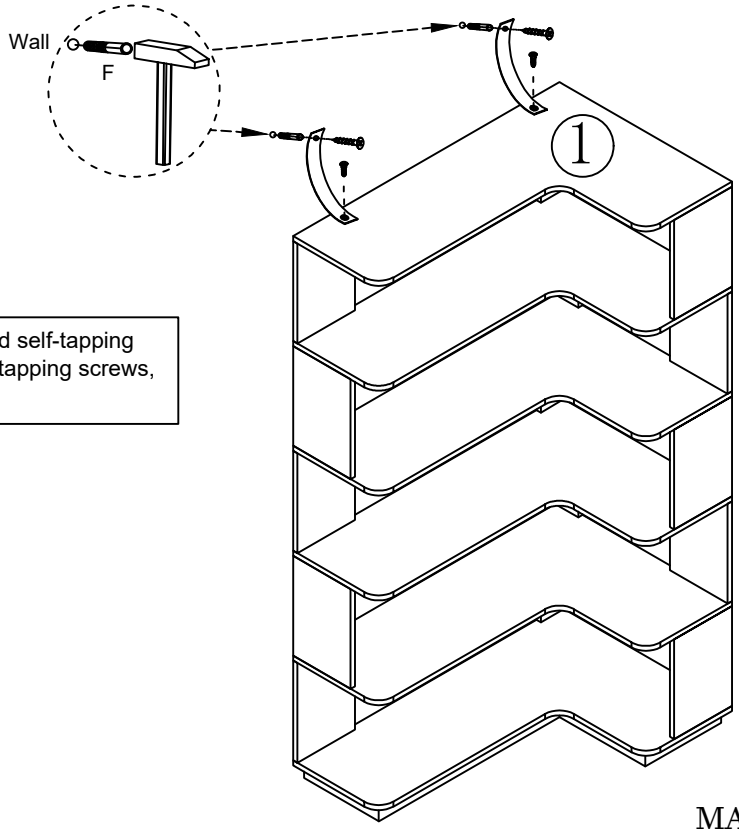


If it is a solid wall, please use expansion and self-tapping screws, if it is a wooden wall, only use self-tapping screws, please do not overtighten the screws

MADE IN CHINA