Assembly instructions

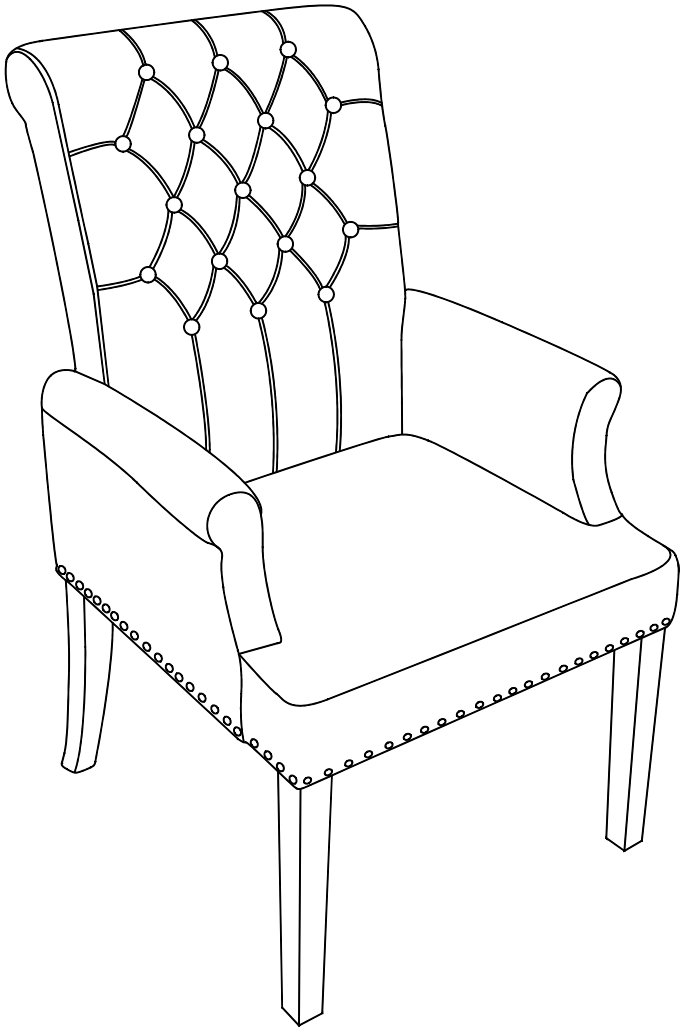

Packing List

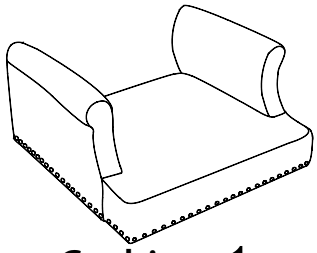 Cushion 1 pc	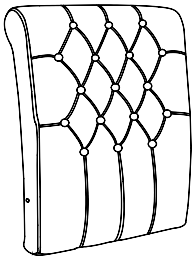 Backrest 1 pc	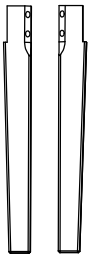 Front Leg 2 pcs	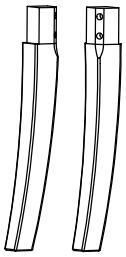 Back Leg 2 pcs
A 12+1 pcs	B 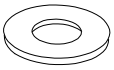 12+1 pcs	C 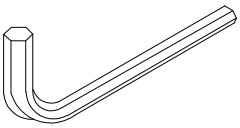 1 pc	D 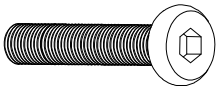 12+1 pcs
Spring Washer	Flat Washer	Allen Wrench	Screws

Step 1 Insert the front legs and back legs into the corresponding holes as shown, and tighten completely with screws D and washers (#A, B)

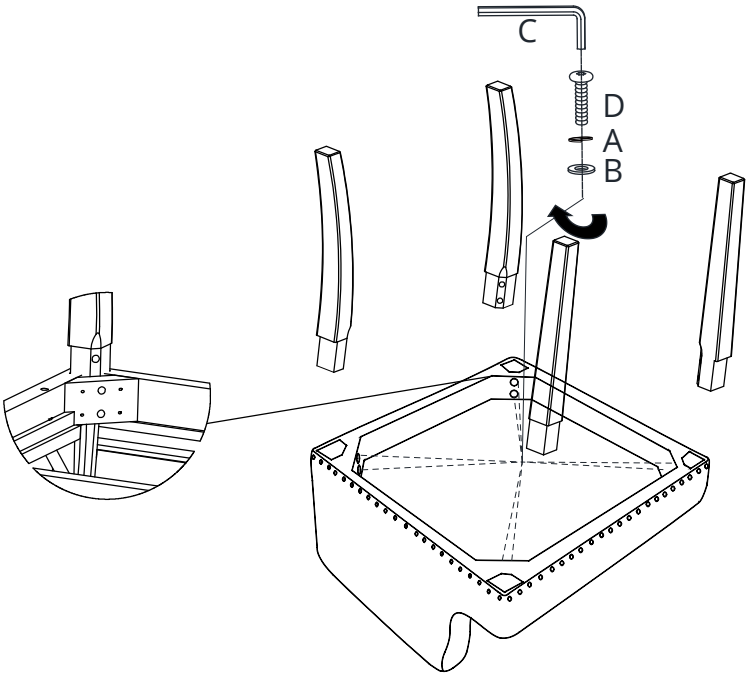

Step 2 Position the backrest in the correct location, initially tighten the bottom screws D with washers (#A, B) Tighten them up to 80%

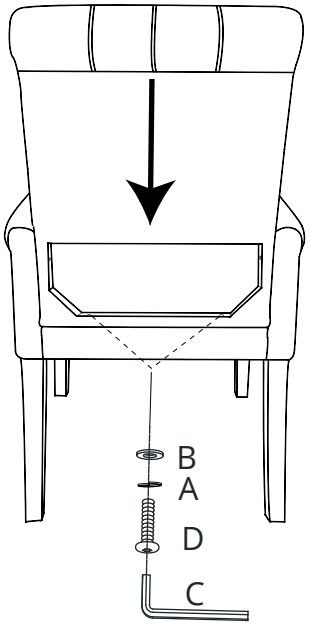

Step 3 After confirming that the screw holes are aligned , tighten the screws on both sides of the backrest, and then tighten all screws up to 100% in this step.

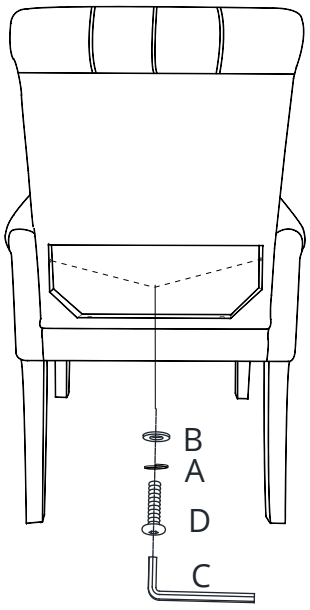
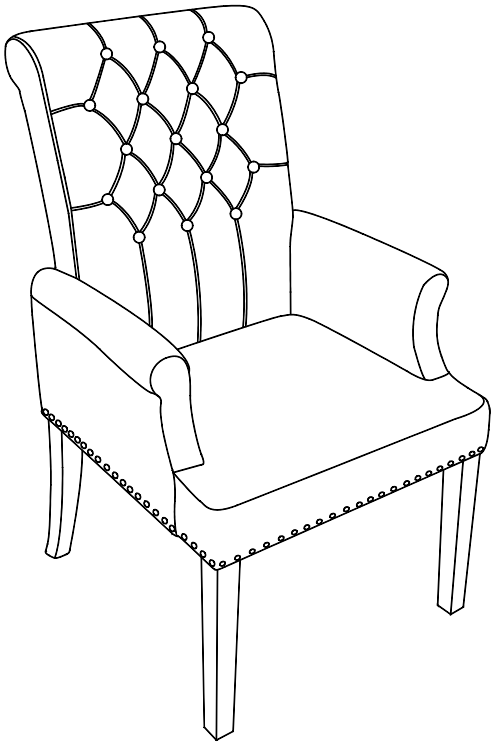
Step 4 Finished