EXPLODED VIEW

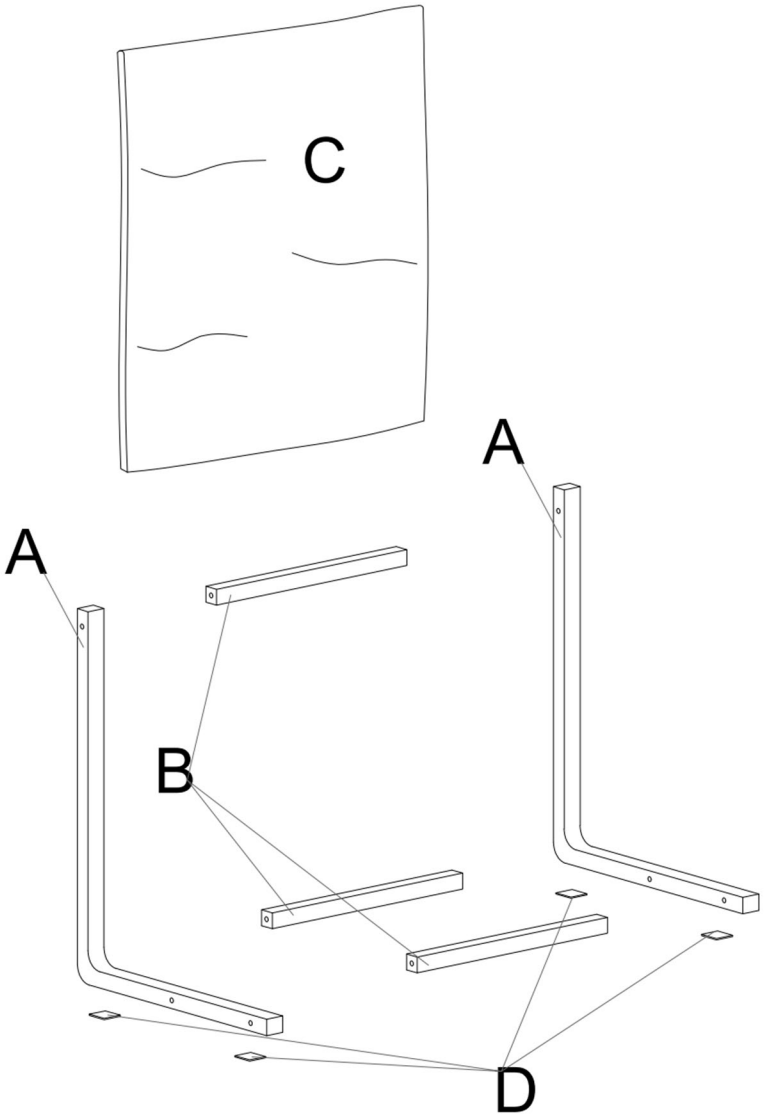

PARTS

A*2



Metal Frame

B*3



Metal Tube

C*1

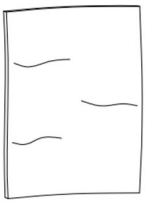

Fabric Cover

D*4



Foot Pads

HARDWARE

TOOL LIST

NOTE: Designated with (★) We provide additional spare parts in the hardware package

①*6



M6*25mm
Bolt

②*1



Allen key

Please make sure all hardware&packing material fitting the list. Especially some small accessories may be missing during transportation. Please contact us if you have any question.

step 1

Connect two metal frames (A) with the metal tubes (B) as shown, use the allen wrench (F) provided to tighten all the bolts (E) on both sides, please make sure the bolts are fully tightened before next step.

Stick the foot pads (D) on the corners of the metal frames (A) as shown.

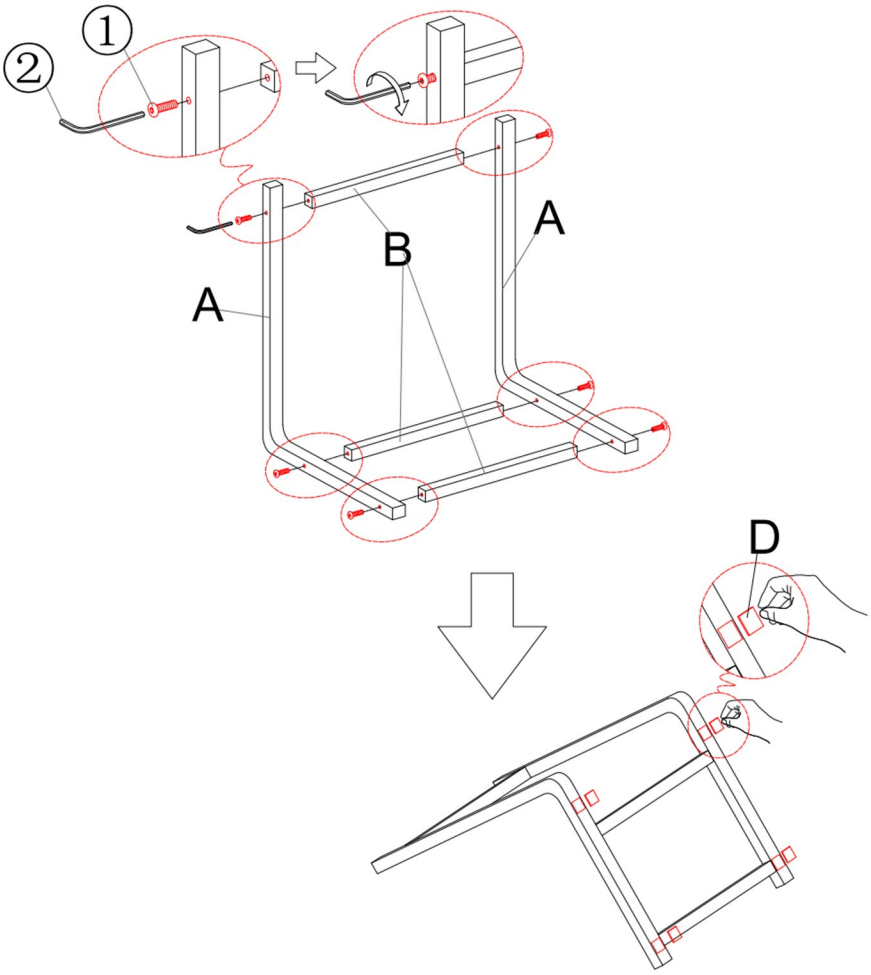

step 2

Put on the fabric cover (C) to the metal frame as shown.

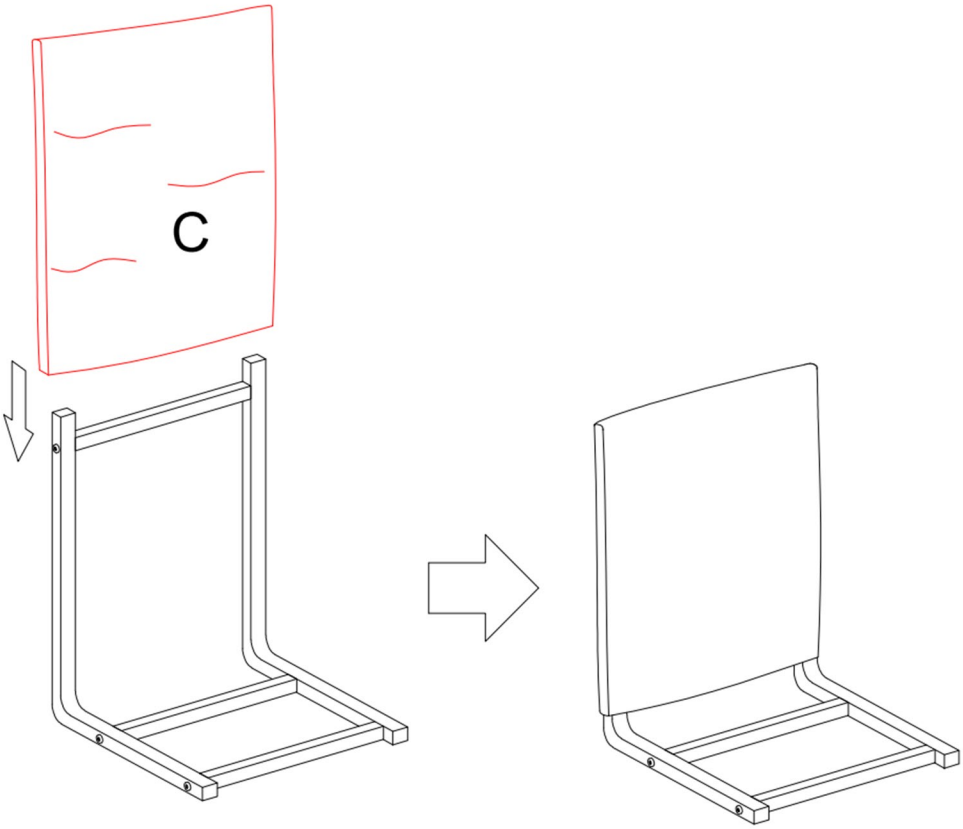

step 3

Place the metal frame behind the armless chair/side chair as shown, this metal frame is for supporting use.

