Nightstand

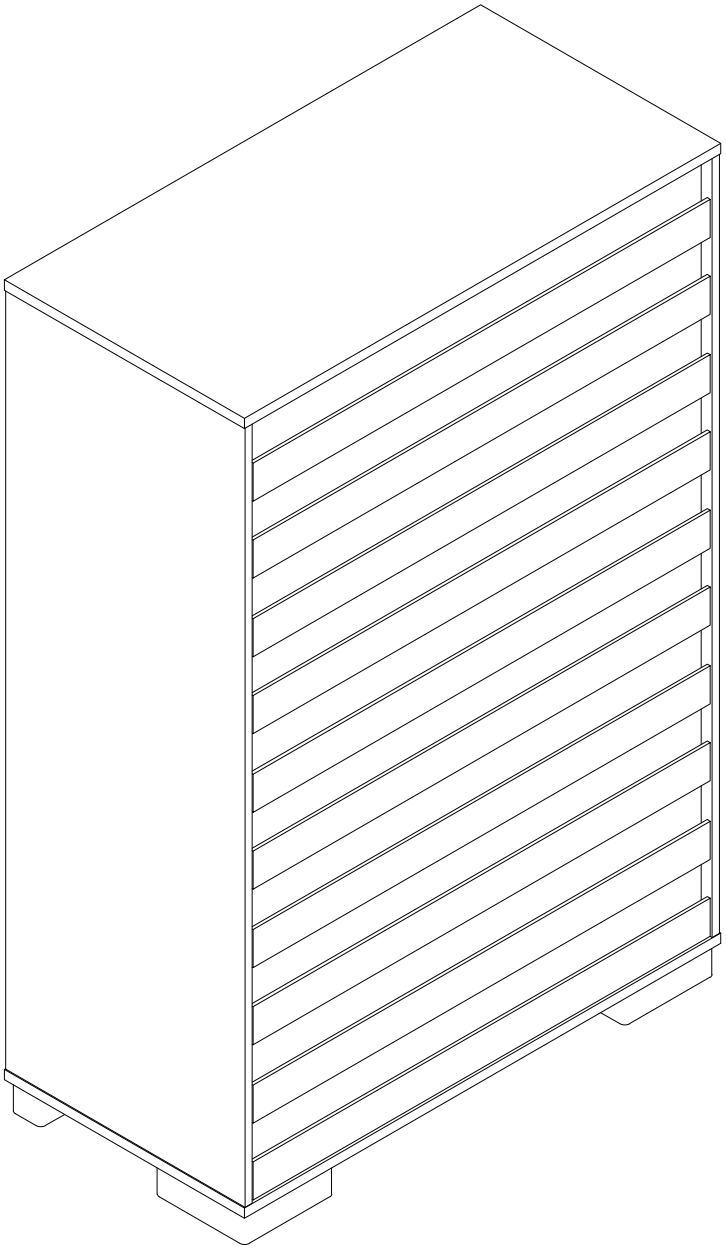

Dimensions

Width - 31.2inch
Depth - 15.7inch
Height - 47.4inch

Important – Please read these instructions fully before starting assembly

Safety and Care Advice

Important – Please read these instructions fully before starting assembly

• Check you have all the components and tools listed on the following pages.

• Remove all fittings from the plastic bags and separate them into their groups.

• Keep children and animals away from the work area, small parts could choke if swallowed.

• Make sure you have enough space to layout the parts before starting.

• During assembly do not stand or put weight on the product, this could cause damage.

• Assemble the item as close to its final position (in the same room) as possible.

• Assemble on a soft level surface to avoid damaging the unit or your floor.

• Parts of the assembly will be easier with 2 people.



• To reduce the likelihood of damaging your product please ensure that your power drill is set on a low torque setting.

Care and maintenance

• Only clean using a damp cloth and mild detergent, do no use bleach or abrasive cleaners.

• From time to time check that there are no loose screws on this unit.

• This product should not be discarded with household waste. Take to your local authority waste disposal centre.

Handy Hints

• Assemble all parts and bolts loosely during assembly, only once the product is complete should you fully tighten the bolts

• Regularly check and ensure That all bolts and fittings are tightend properly.



Components - Panels

Please check you have all the panels listed below

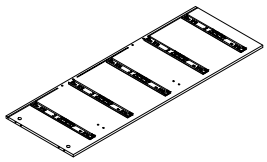

1 (1125X399X12mm)X1

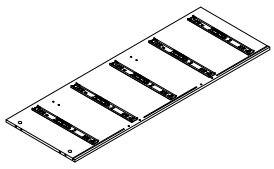

2 (1125X399X12mm)X1



3 (767X128X12mm)X2



4 (767X70X12mm)X2

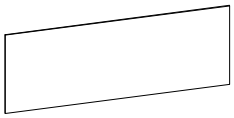

5(777X299X2.7mm)X2

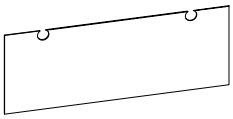

6 (777X299X2.7mm)X1

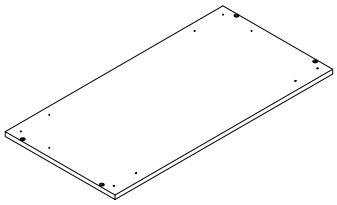

7 (794X400X15mm)X1

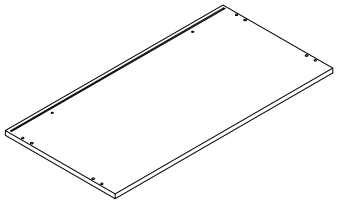

8 (794X400X15mm)X1

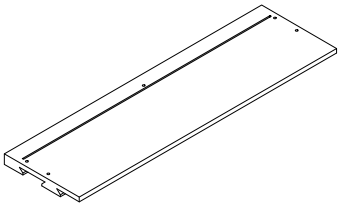

9 (762X221X27mm)X5

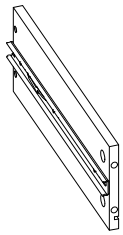

10 (350X120X12mm)X5

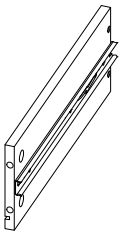

11 (350X120X12mm)X5

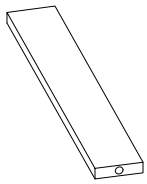

12 (337X50X12mm)X5

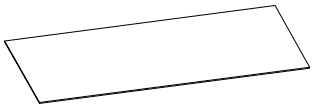

13 (733X347X2.7mm)X5

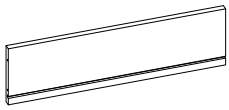

14 (723X120X12mm)X5

Components - Fittings

Please check you have all the panels listed below

Note: The quantitie below are the correcet amount to complete the assembly. In some cases more fittings may be supplied than are required.

A  Male Camlock x 45	**B**  Female Camlock x 45	**C**  Dowel x 8
D  4*30mm Screw x 25	**E**  5*45mm Screw x 4	**F**  Leg x 2
G  3*17mm Screw x 12	**H**  Plasticwedge x 12	**I**  Wall Fixing Pack x 2
J 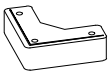 Leg x 2	**K**  Protective Feet x 10	**L**  4*45mm Screw x 10

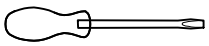

Tools required



Phillips screwdriver
(medium & large)

Ruler - Use this ruler to help correctly identify the screws

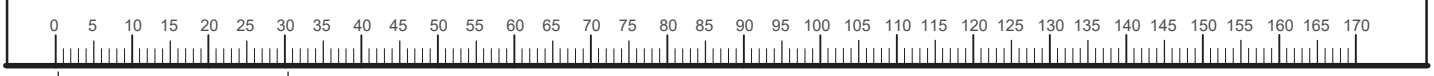



The screws length is measured from the head to the point (30mm screw shown).

Using Camlocks

Step 1

Connect the male camlock as diected in the assembly instructions using a scewdriver.

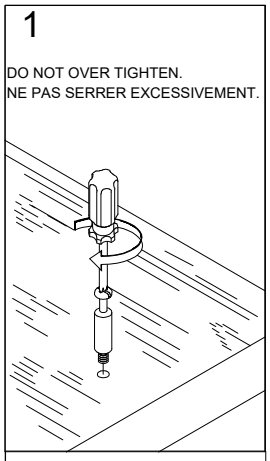

Step 2

Push the male camlock into the entry hole.

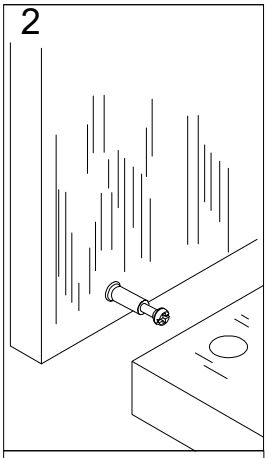

Step 3

Insert the femle camlock as shown in the instruction.

Note：ensure that the arrow on the top of the camlock points towards the entry hole for the male camlock.

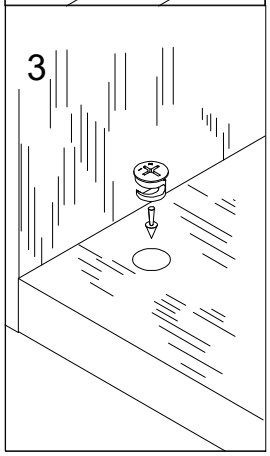

Step 4

Turn the female camlock clockwise with a screwdriver.

You should feel a click when the camlock is locked in place.

The joint is now secure.

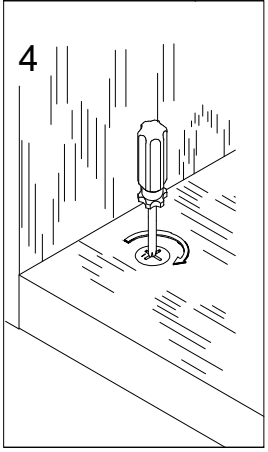

Assembly Instructions

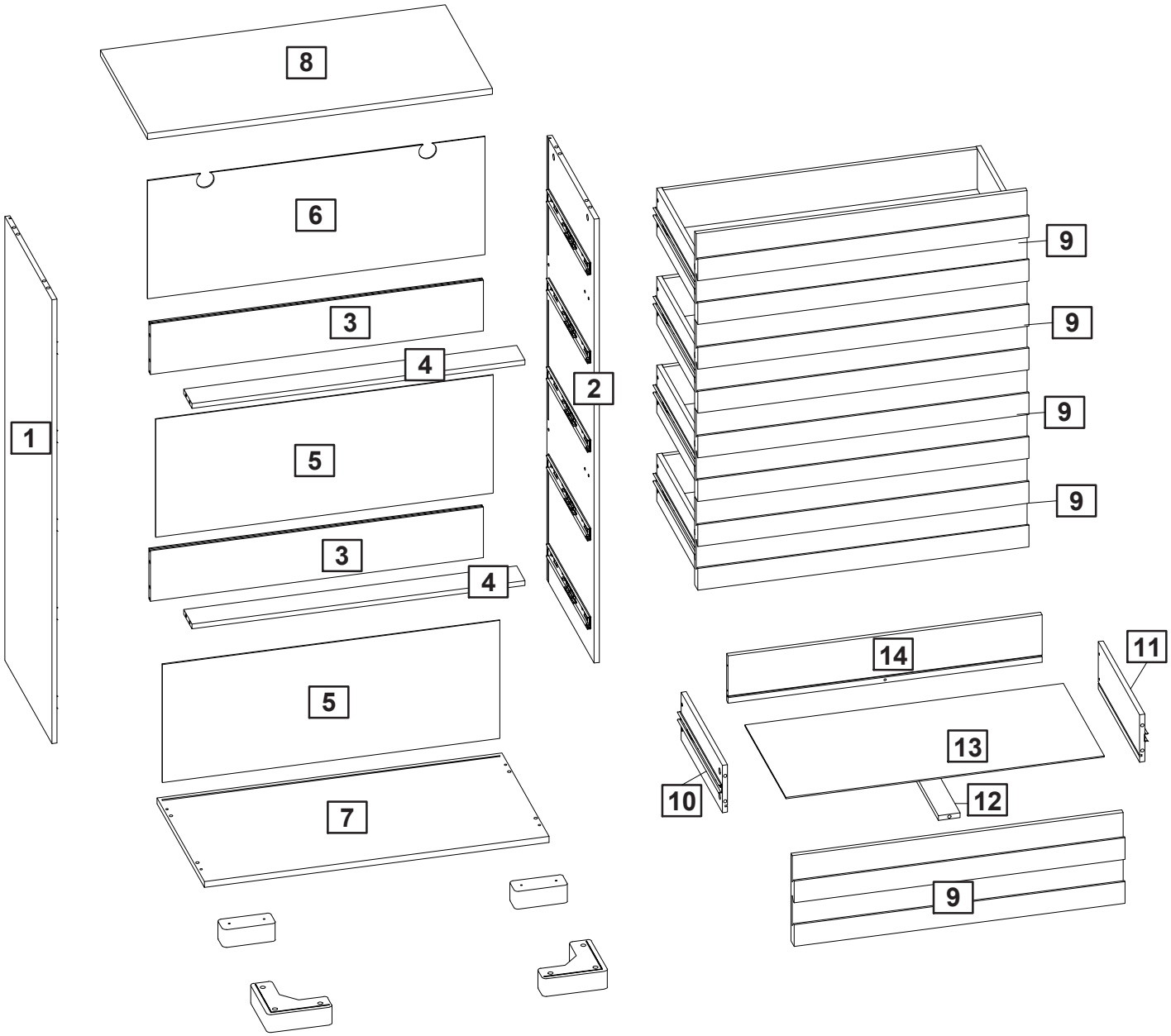

Assembly Instructions

Step 1

A x 16

C x 8

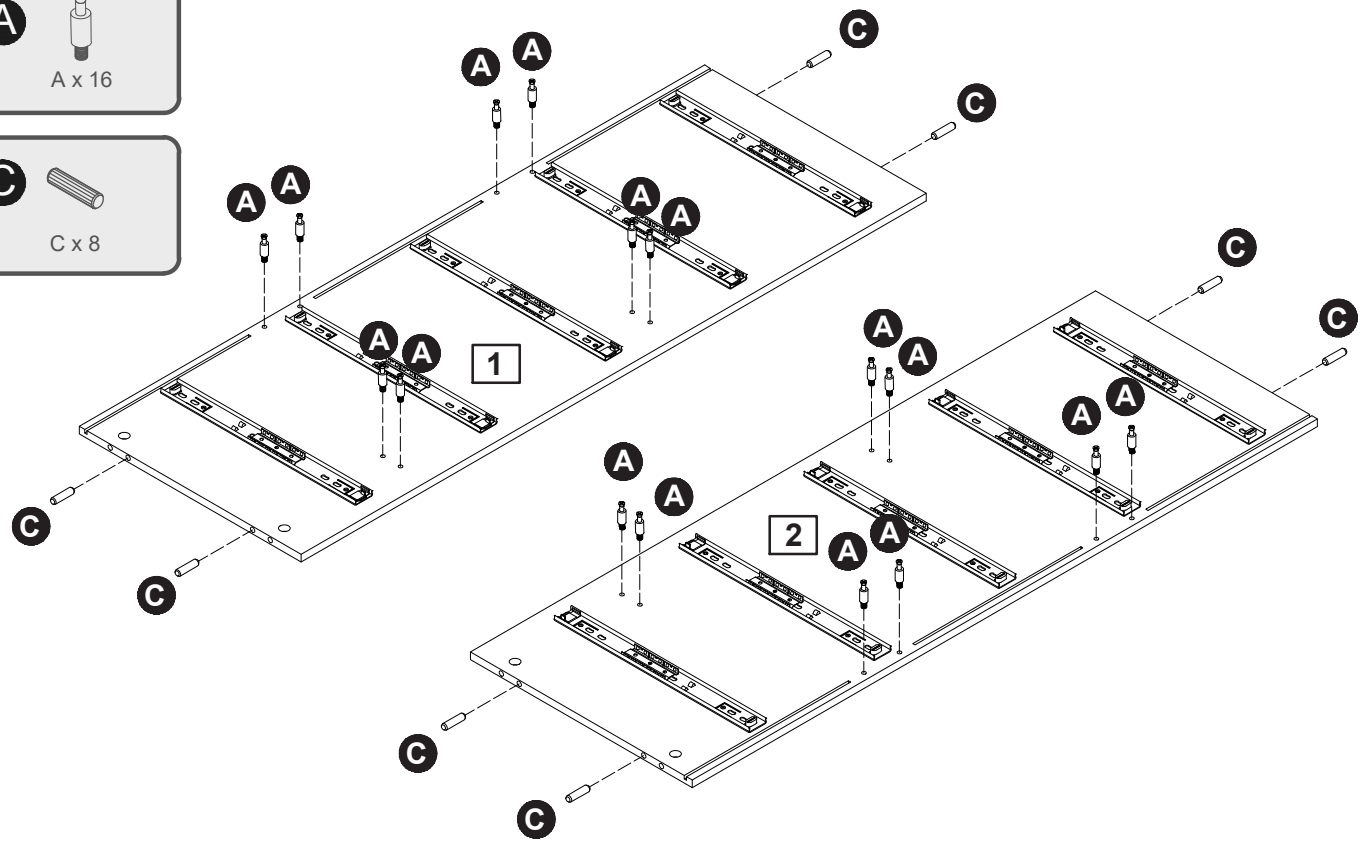

Step 2

B x 8

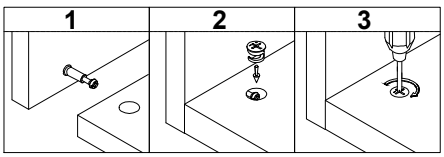

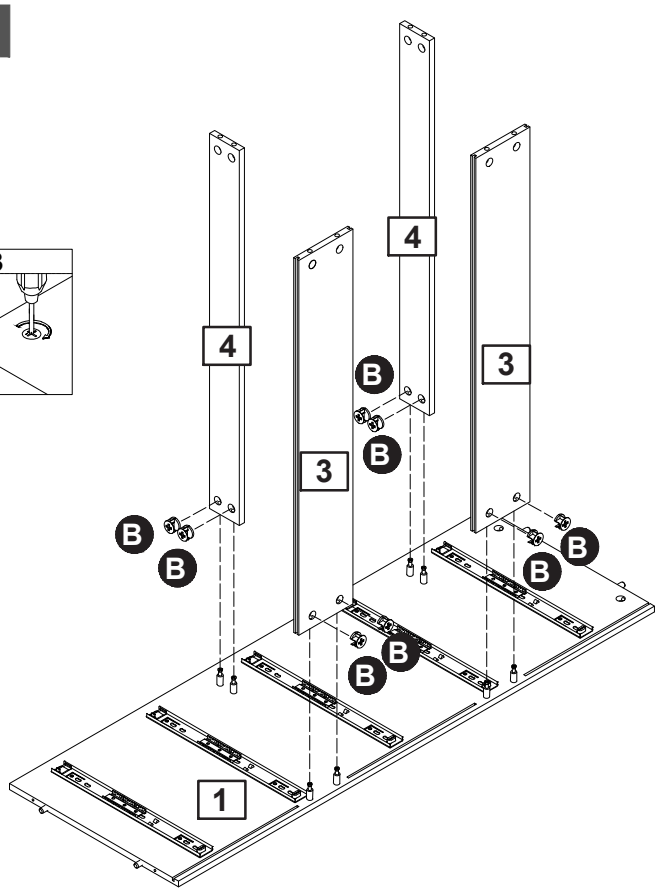

Assembly Instructions

Step 3

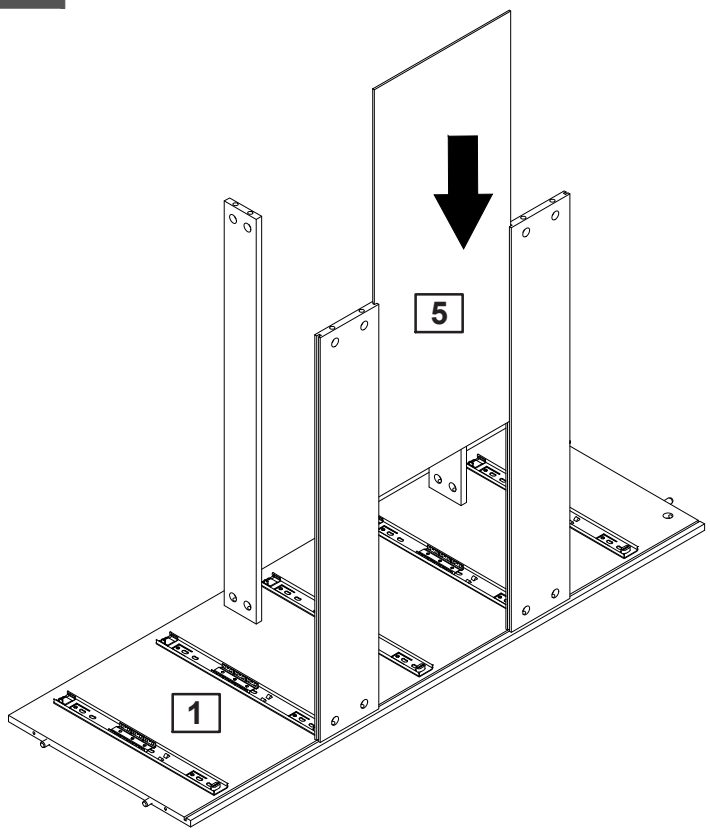

Step 4



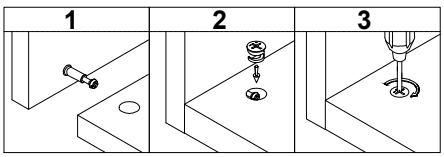

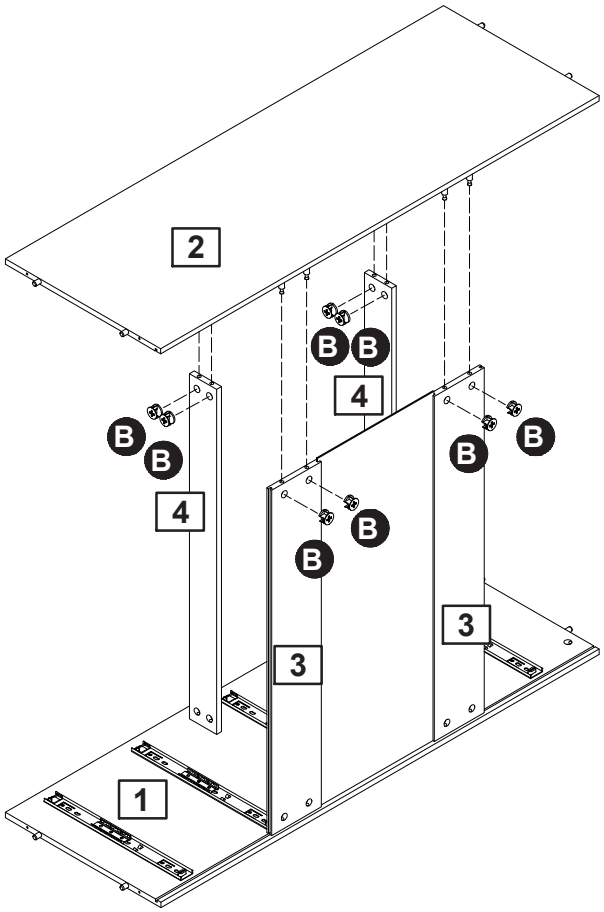

Assembly Instructions

Step 5

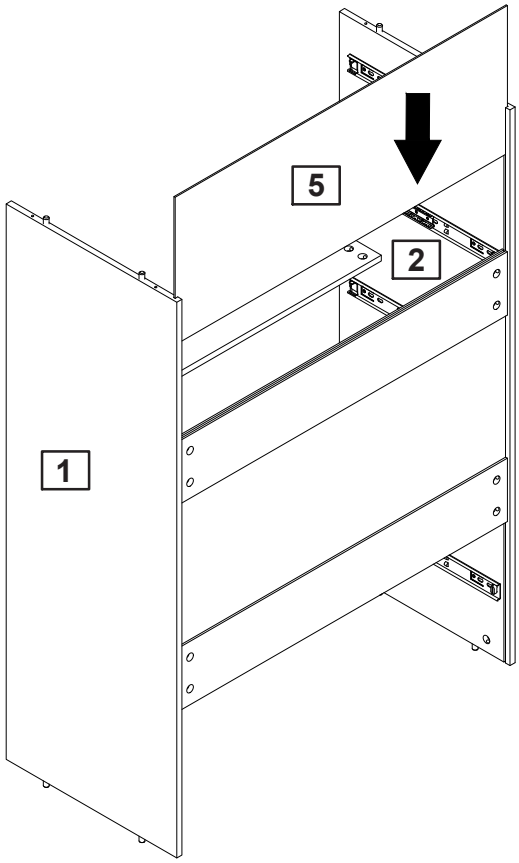

Step 6



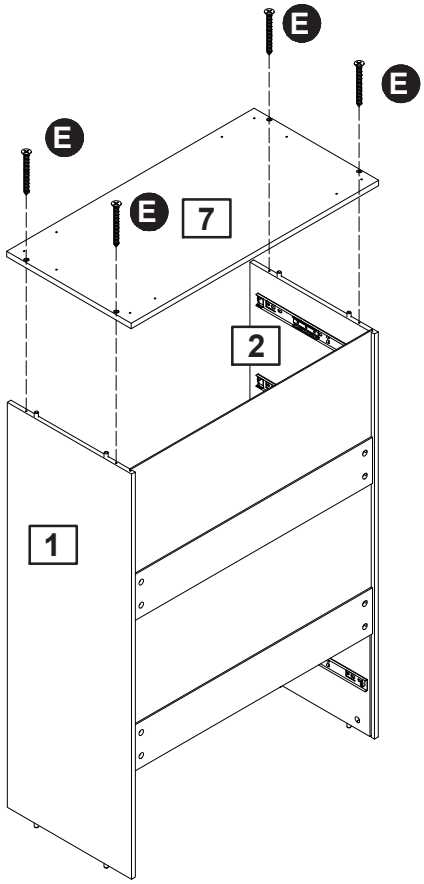

Assembly Instructions

Step 7

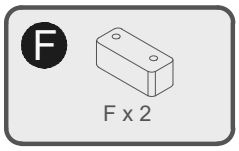

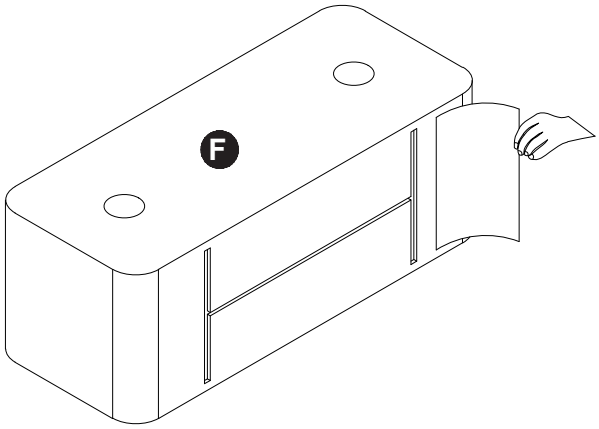

X2

Tear off the metal foot protective film!

Step 8

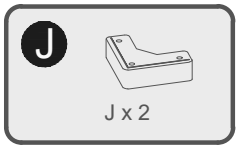

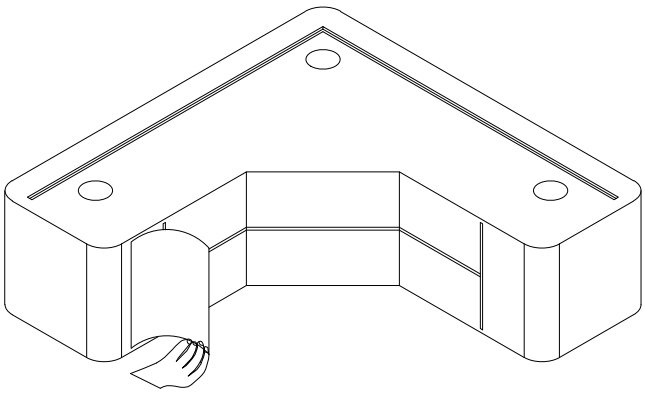

X2

Tear off the metal foot protective film!

Assembly Instructions

Step 9

F x 2

J x 2

L x 10

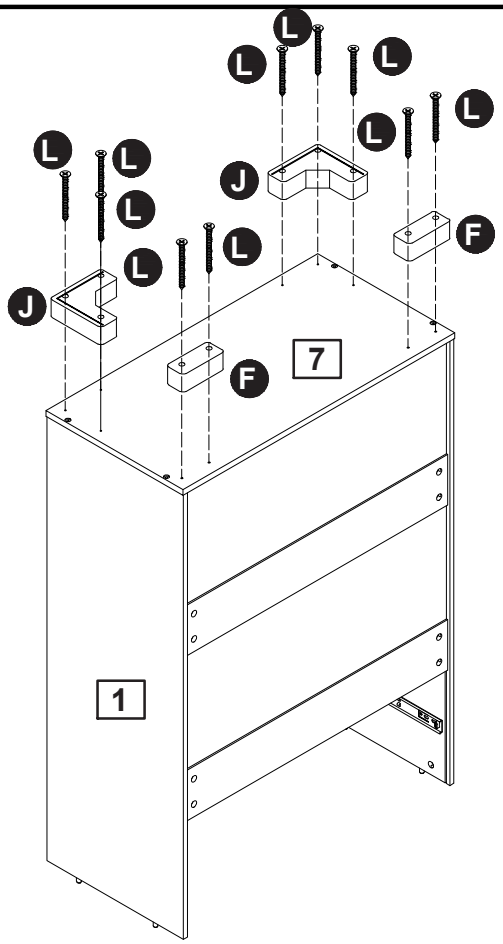

Step 10

K x 10

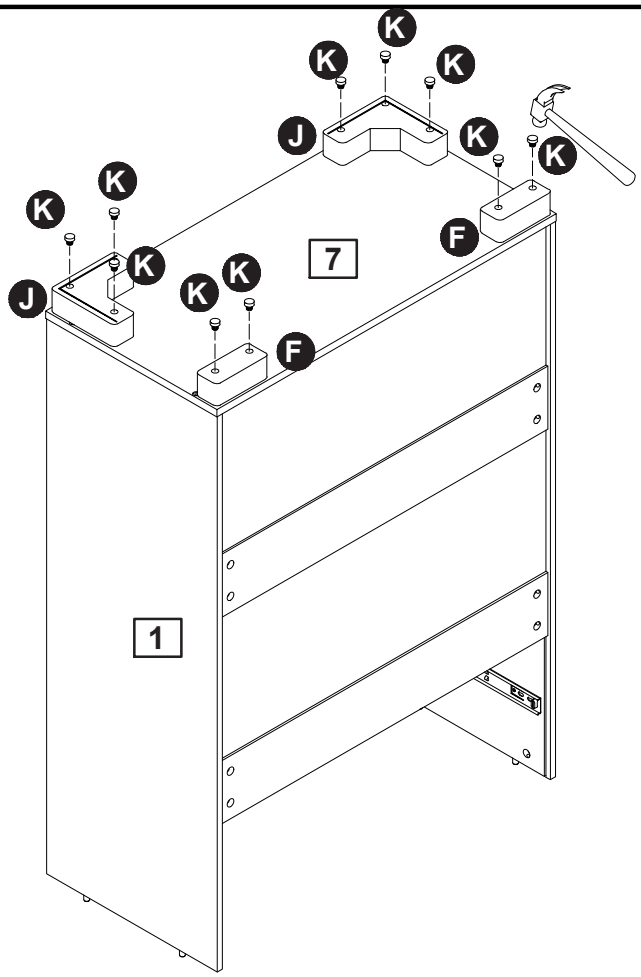

Assembly Instructions

Step 11

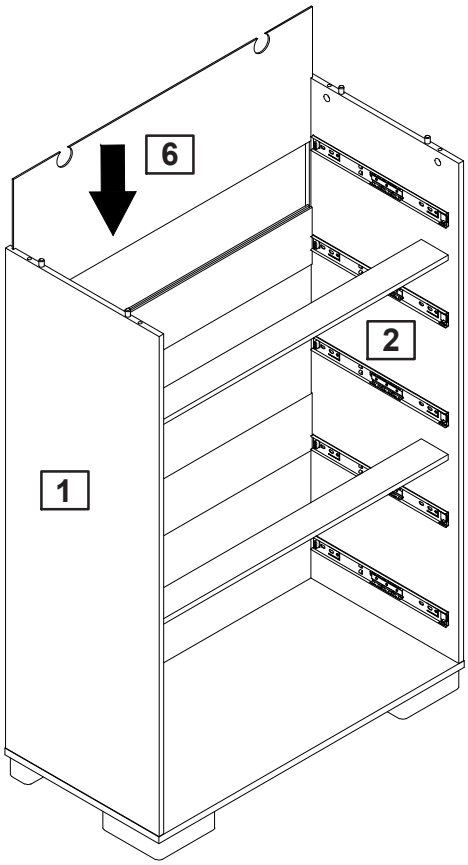

Step 12

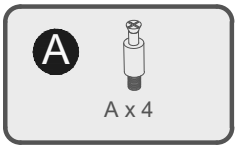

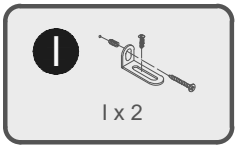

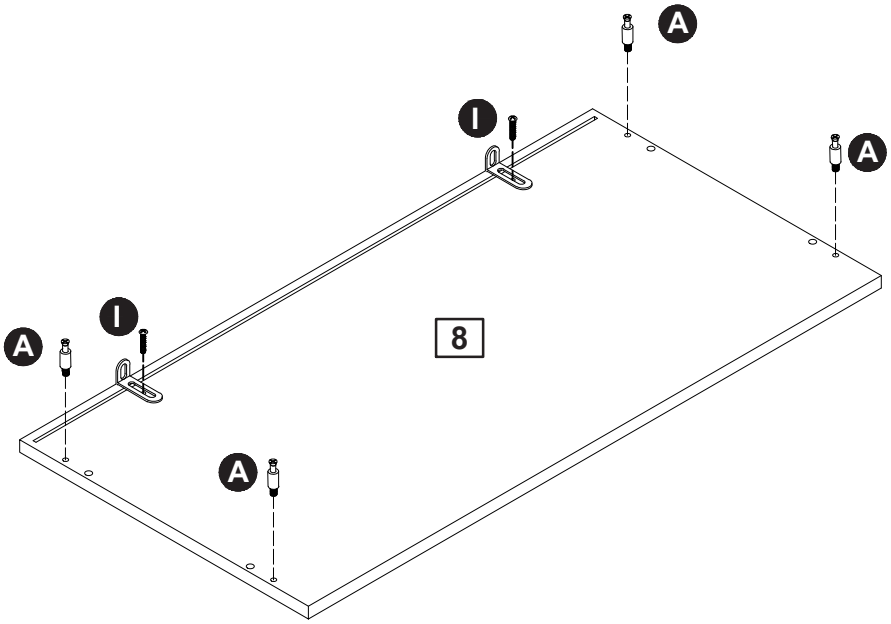

Assembly Instructions

Step 13

B x 4

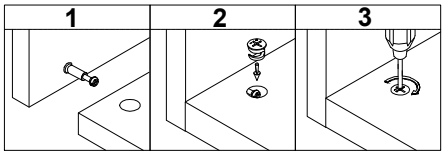

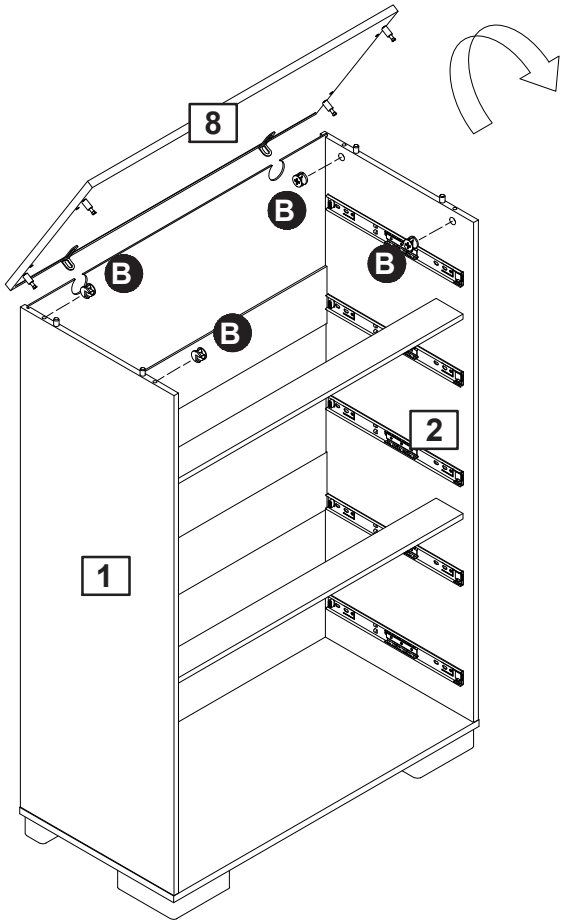

Step 14

G x 12

H x 12

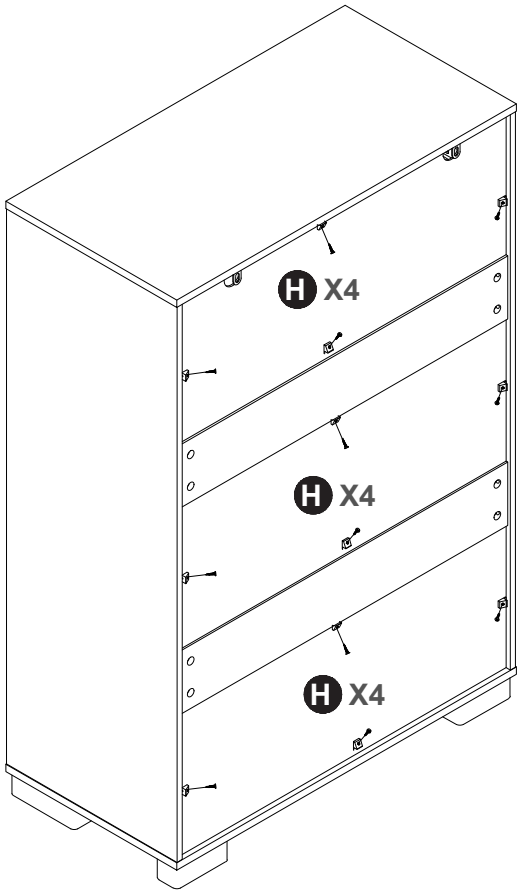

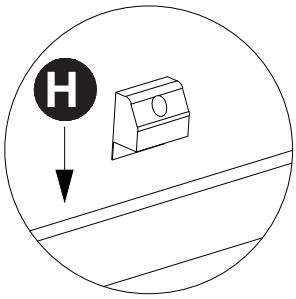

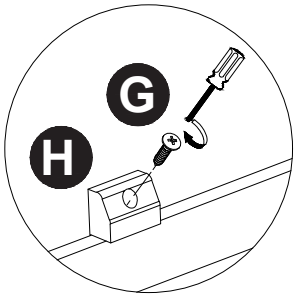

Step 15

WARNING

Serious or fatal injuries can occur from furniture tipping over. To prevent the furniture from tipping over we recommend that it is permanently fixed to the wall. Wall anchor and hardware are included with this product. Please make sure hardware is suitable for your walls before installing, as different wall materials may require different types of anchors.

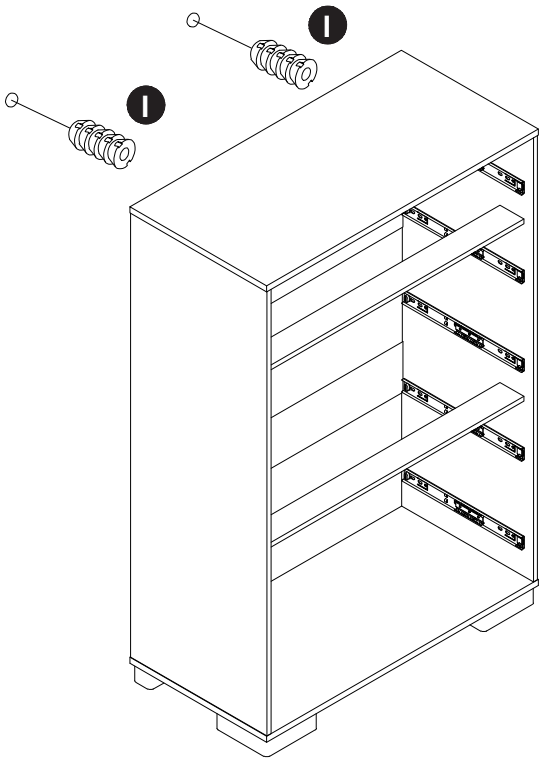

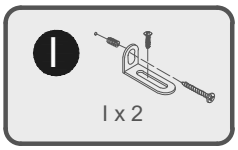

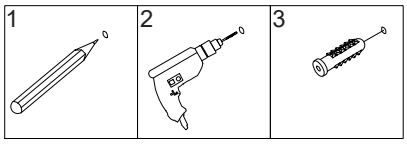

Step 16

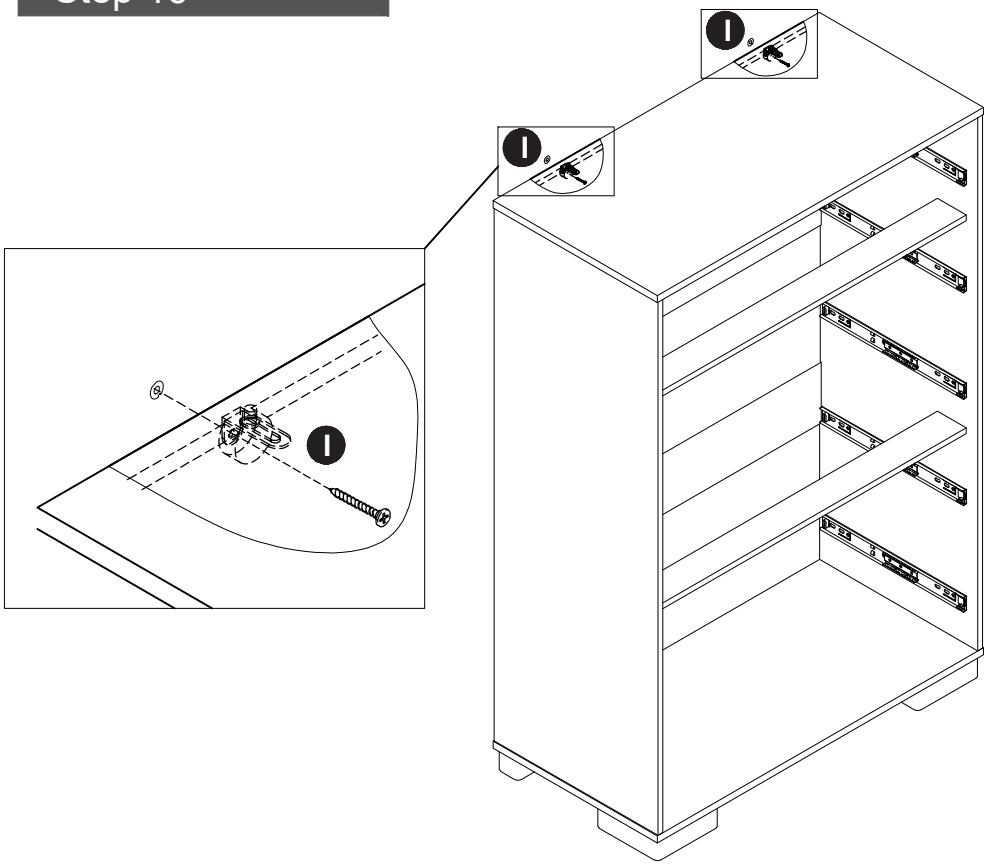

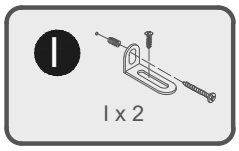

Assembly Instructions

Step 17

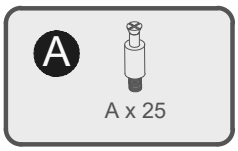

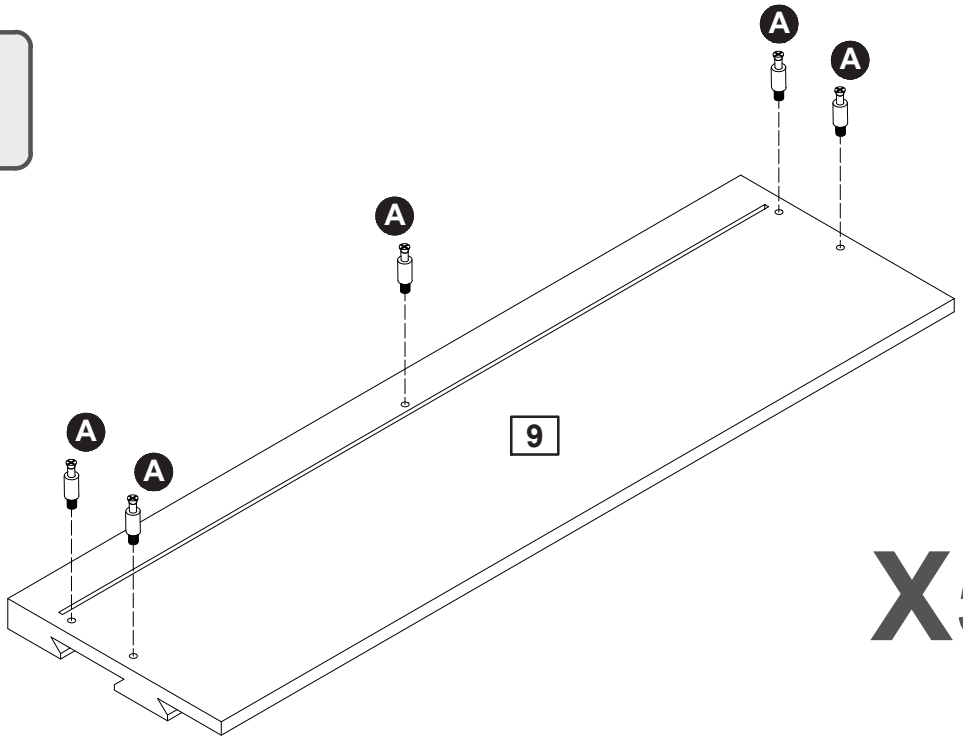

X5

Step 18



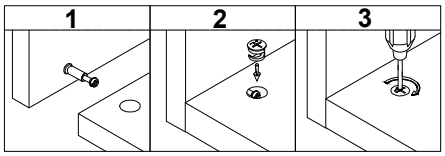

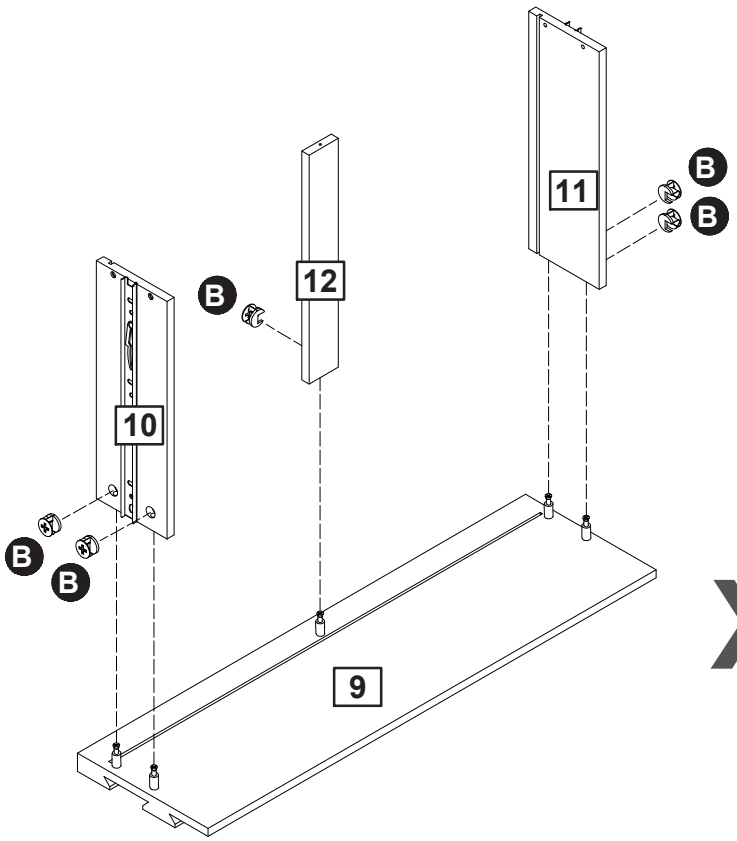

X5

Assembly Instructions

Step 19

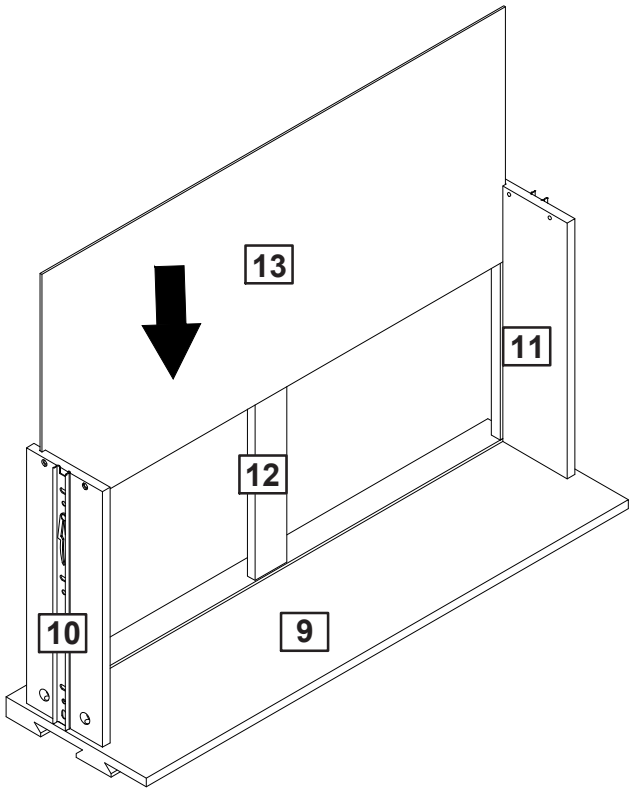

X5

Step 20

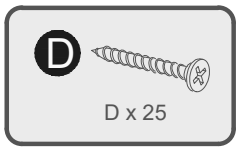

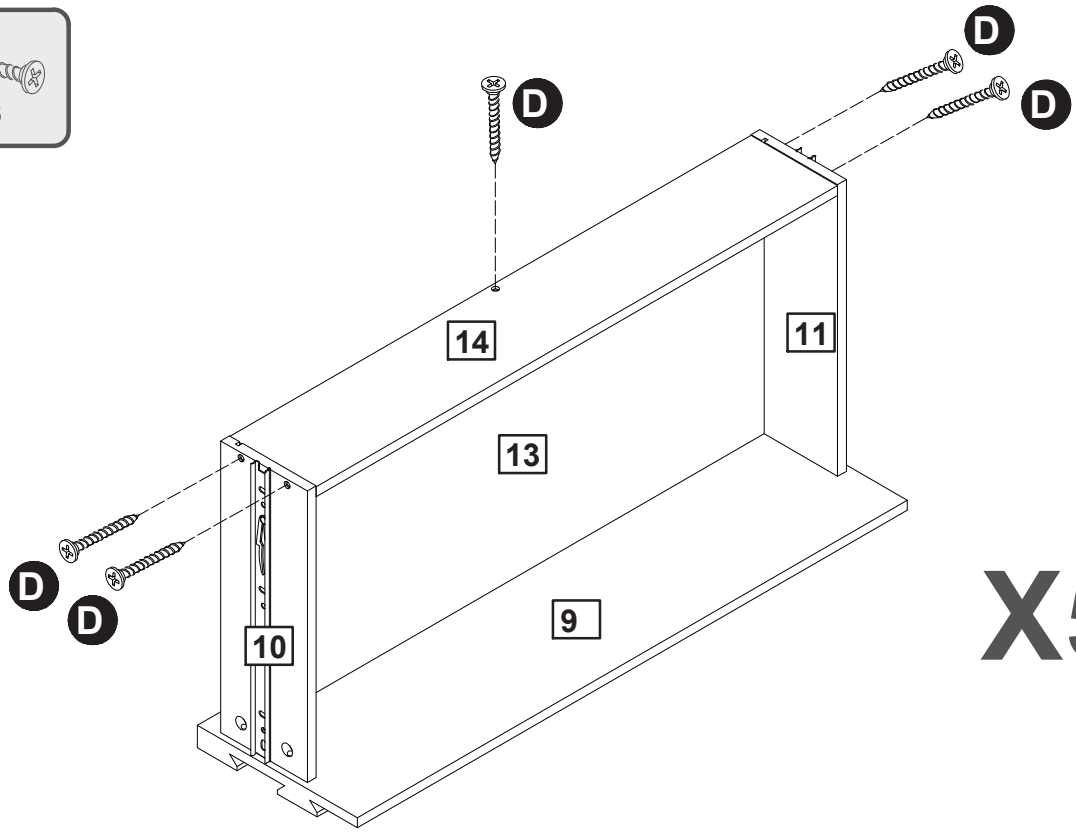

X5

Assembly Instructions

Step 21

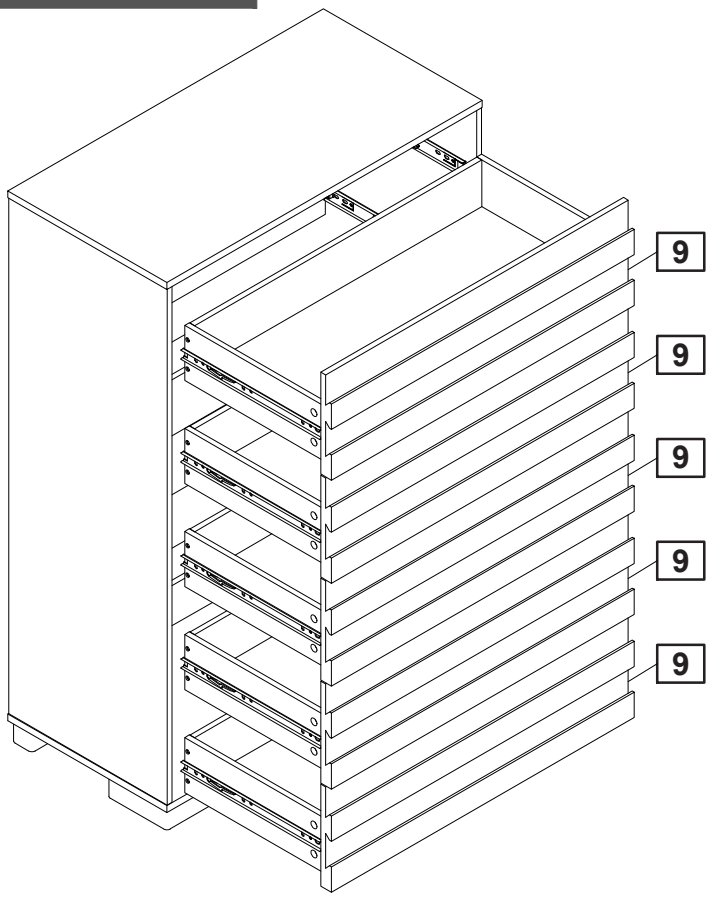

Attention:

1.Align the slide runners on the drawer with the unit and push it carefully inside until it stops.

★ If the drawer does not go in smoothly please take it out and repeat the step.

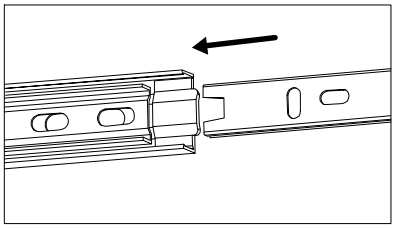

Step 22

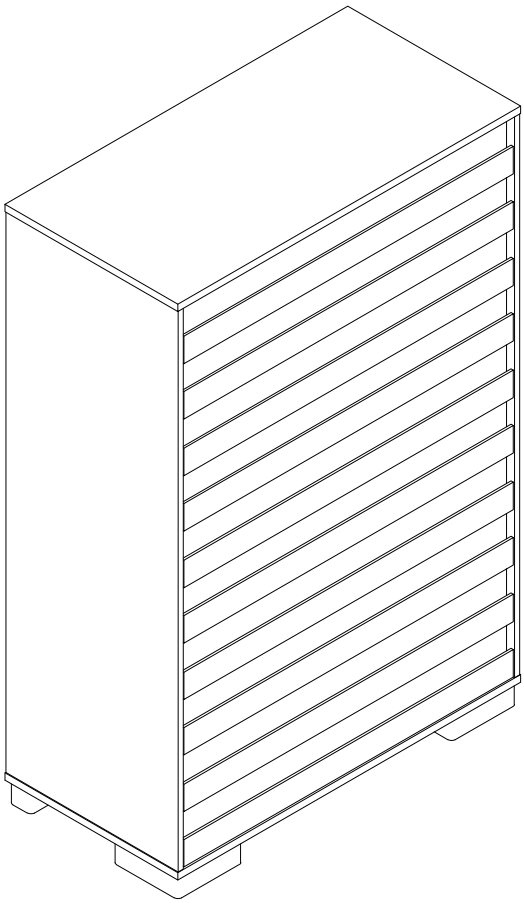

Assembly is complete.

A Guide to Wall Mounting & Fixings

Important note:

If plastic wall plugs (rawl plugs) are supplied with your product, e.g.:



- these are only suitable for use in masonry walls.

If you are in any doubt about the correct wall plugs for your wall, seek professional advice.

Failure of the product due to using the incorrect fixings is the responsibility of the installer.

Important: when drilling into walls always check that there are no hidden wires or pipes etc.

Make sure that the screws and wall plugs being used are suitable for **supporting your unit. Consult a qualified tradesperson if you** are unsure.

Hints:

1: General rule: always use a larger screw and wall plug if you are not sure.
2: Ensure you use the recommended drill bit to match the wall plug and hole size.
3: Ensure you drill the hole horizontally; do not force the drill or enlarge the hole.
4: Take extra care when drilling high walls, ceilings and ceramic tiles. Ensure wall plugs are inserted beyond the thickness of the ceramic tiles to avoid the tiles splitting or cracking.
5: Ensure wall plugs are well fitted and are a tight fit in the drilled hole.

Types of walls

You can use one of the following types of wall plug if your walls are made of brick, breeze block, concrete, stone or wood.

No.1 “General Purpose” wall plug

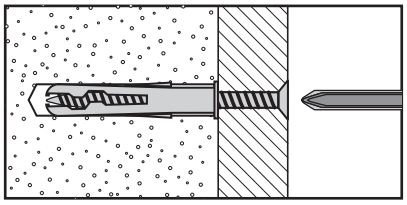

Generally aerated blocks should not be used to support heavy loads, use a specialist fitting in this case. For light loads, general purpose wall plugs can be used.

No.3 “Cavity Fixing” wall plug

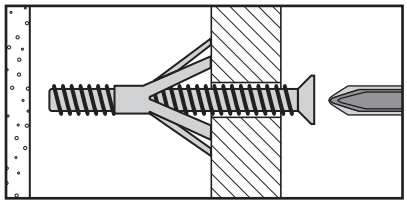

For use with plasterboard partitions or hollow wooden doors.

No.5 “Hammer Fixing” wall plug

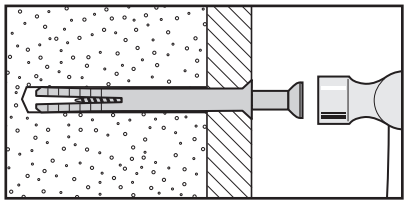

For use with walls stuck with plasterboard. The hammer fixing allows it to be fixed to the wall rather than the plasterboard. Always check the fixing is secure to the retaining wall.

No.2 “ Plasterboard” wall plug

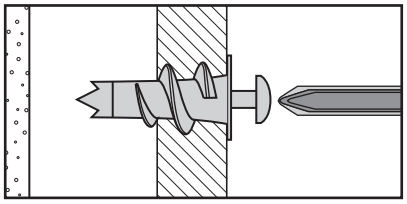

For use when attaching light loads onto plasterboard partitions.

No.4 “ Cavity Fixing – Heavy Duty” wall plug

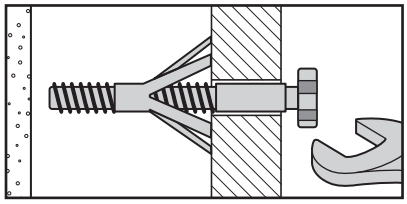

For use when fitting or supporting heavy loads such as shelving, wall cabinets and coat racks.

No.6 “ Shield Anchor” wall plug – heavy loads

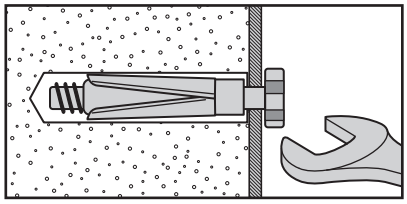

For use with heavier loads such as TV and HiFi speakers and satellite dishes etc.

Care & Maintenance

Safety: always check the fitting and location to ensure your safety in and around the home.

Fitting: from time to time check the fitting to ensure the wall plugs or screws do not become loose.