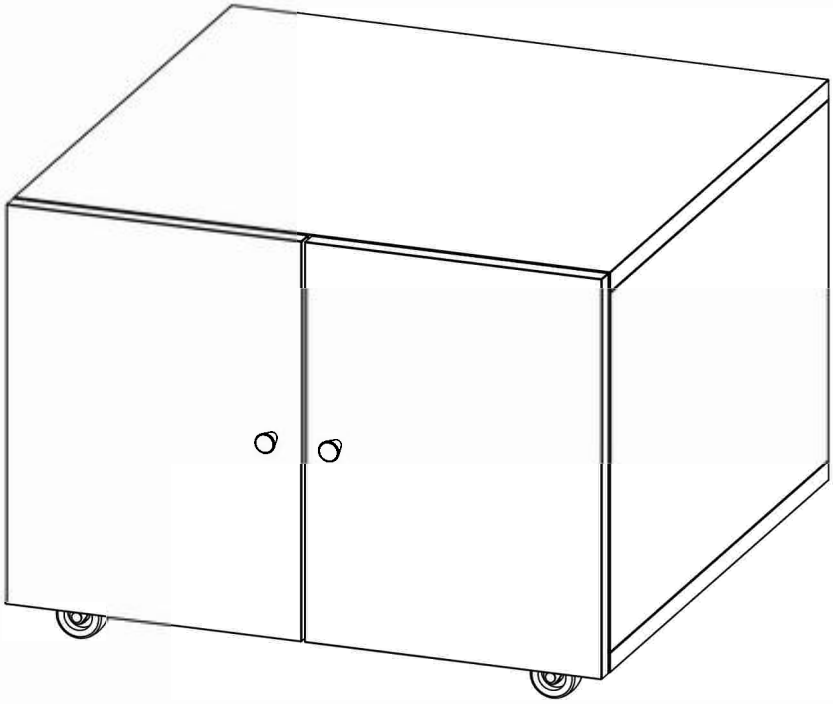

NOTE:PLEASE AN ASSISTANT IS REQUIRED
ES NECESARIO UN AYUDANTE UN ASSISTANT
ESTNECESSAIRE.

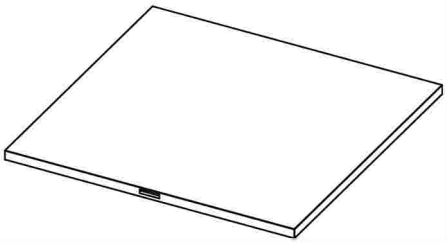

A: Top panel

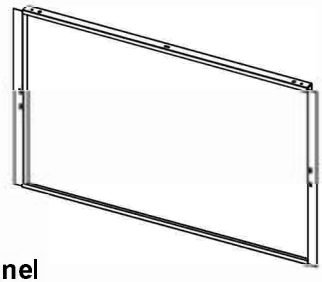

B: Back panel

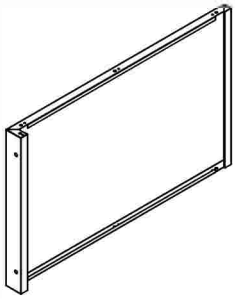

C: Panel x2

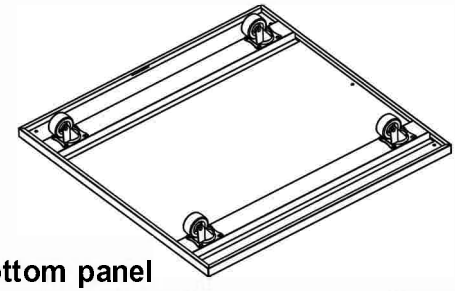

D: Bottom panel

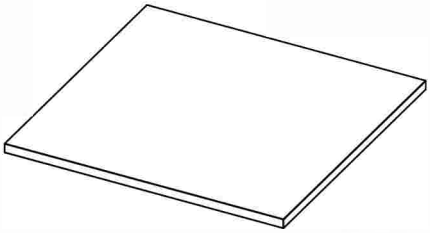

E: Shelving

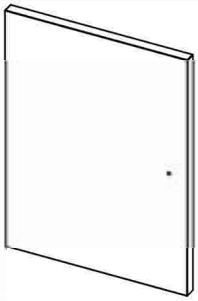

F: Door x2

5x12 Screw x22

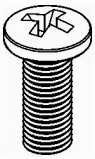

4x8 Screw x4

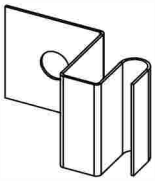

Hinge x4

Hold hands x2

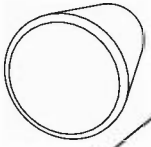

Screw x2

Door-hinge x4

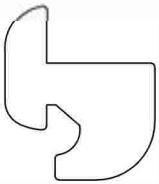

Shelf suppor x4

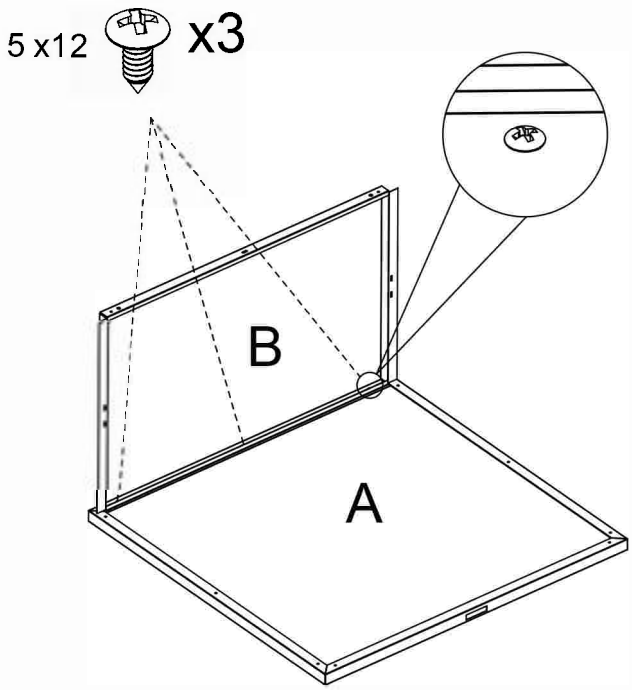

1.Assemble A and B with screws.

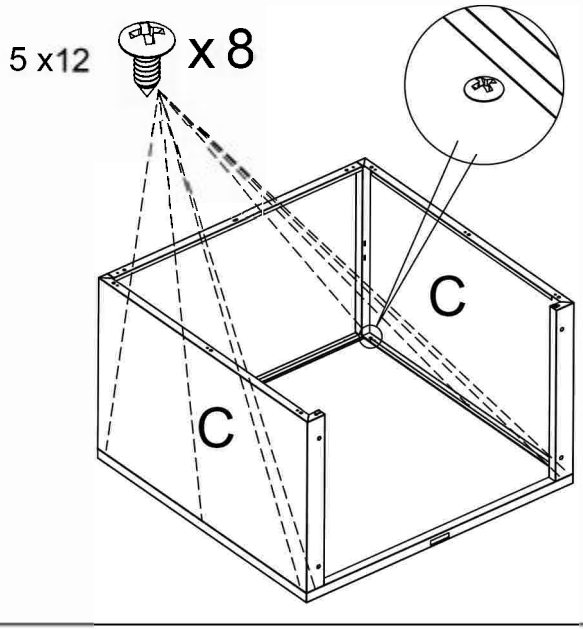

2.Assemble C and B with screws.

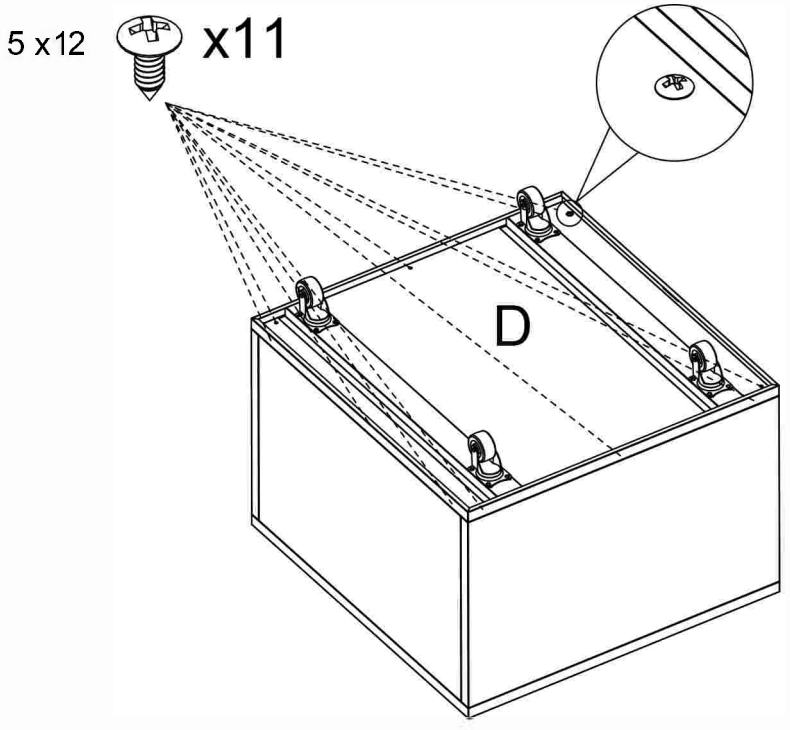

3.Install D with screws

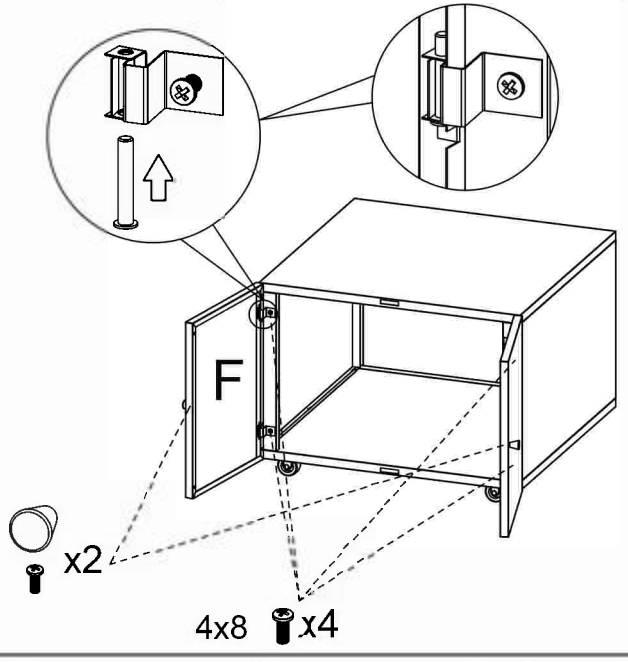

4.Use screws to install hinges and door hinges, F install Hold hands

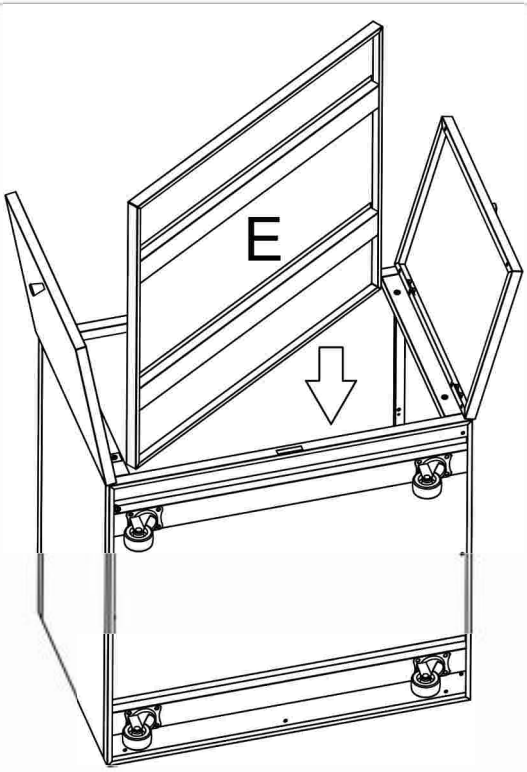

5.Put in E

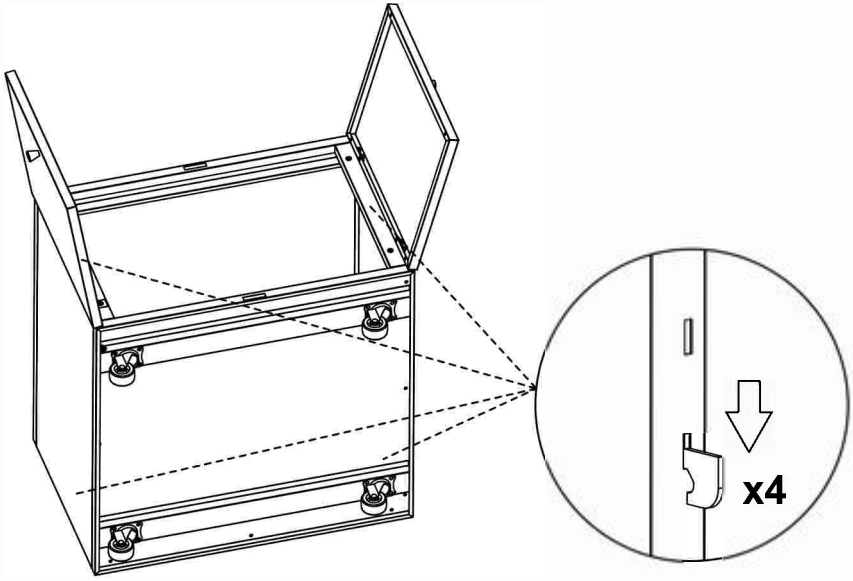

6.Install the Shelf suppor

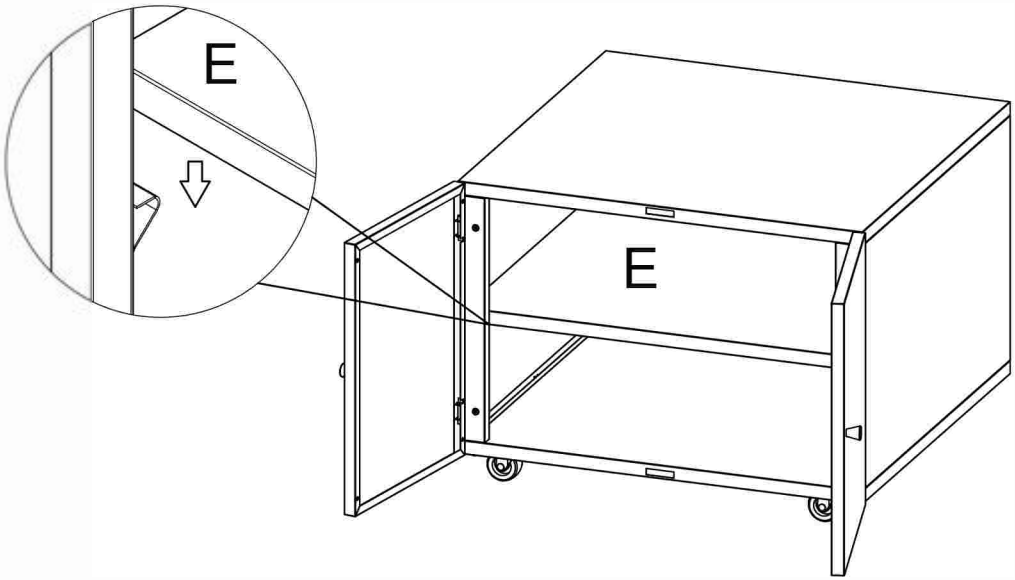

7.Place Ewell

8. Note

● Do not tighten the screws until the cabinet has been assembled.

● Watch out for small parts to avoid swallowing by children.

● Please use a proper screwdriver to avoid damage to the screws.

● Be careful not to get cut on the edges or smashed when you move the cabinet.

● Be careful not to squeeze your fingers when tightening screws.