# ASSEMBLY AND INSTALLATION INSTRUCTIONS

**WARNING:** TO AVOID RISK OF ELECTRICAL SHOCK, BE SURE TO SHUT OFF POWER BEFORE INSTALLING OR SERVICING THIS FIXTURE.

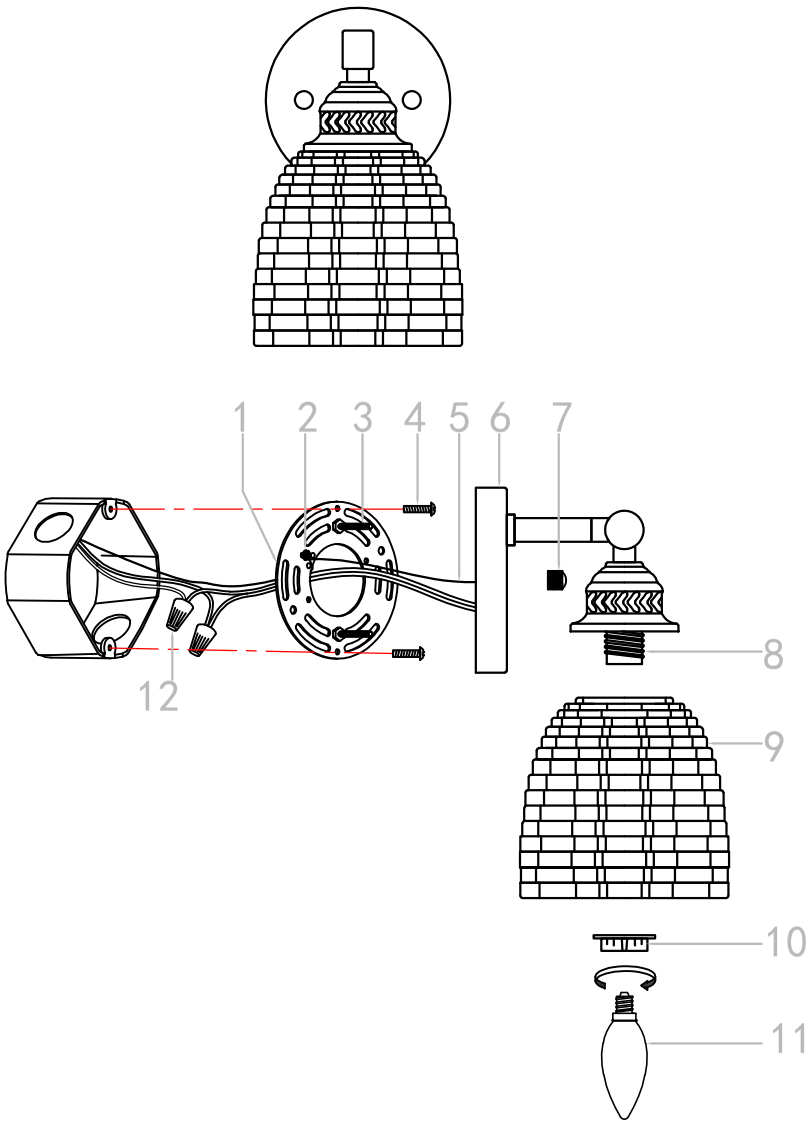


## Before You Begin:

- Ensure power is turned off at the circuit breaker before installation.
- Read all instructions carefully.
- Installation should be performed by a qualified electrician if you are unfamiliar with wiring.

## Step-by-Step Installation:

1.Secure the mounting plate (1) to the junction box using the screws (4).
2.Wiring Connections
·Use wire connectors (12) to connect the black (+) wire to the black wire, the white (-) wire to the white wire.
·Ensure no exposed conductors remain outside wire connectors or outside the junction box.
·Secure the fixture ground wire (5) and the supply ground wire to the mounting plate (1) using the green grounding screw (2).
3.Pass the two small holes on the wall backplate (6) through the screws (3), then secure the fixture to the mounting plate (1) with the decorative nuts (7).
4.Unscrew the outer ring (10) from the socket (8). Install the glass shade (9) onto the socket (8), then tighten the outer ring (10) to secure it.
5.Screw the light source (11) into the socket (8) as indicated. (Bulb Not Included)

## Safety Instructions:

**To avoid fire, shock, and serious personal injury, follow all instructions carefully.**
1. Do not install or use the light fixture if any part is missing or damaged.
2. To avoid possible electrical shock, be sure electricity is turned off at the main fuse or circuit breaker box before wiring.
3. Make certain no bare wires are exposed outside the wire connectors.
4. All wiring must conform to national and local electrical codes.
5. Follow the recommended instructions for the proper method of wiring your new light fixture. If you feel you do not have enough electrical wiring knowledge or experience, have your light fixture installed by a licensed electrician. Any electrical work not described in this manual should be performed by a licensed electrician.