Filing Cabinet

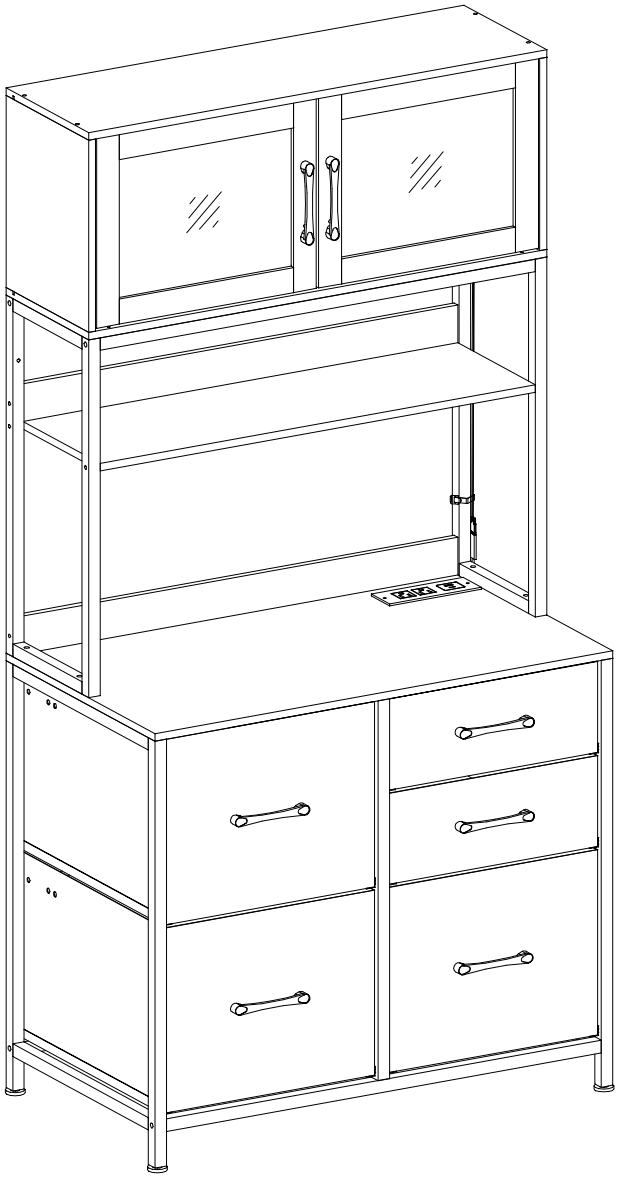

CAUTION : When tightening the screws , tighten sequentially .
Do not tighten any screws fully and then towards the next one .
When every part is OK , then tighten al the screws.

CAUTION:When tightening the screws,tighten sequentially.
Do not tighten any screws fully and then towards the next one.

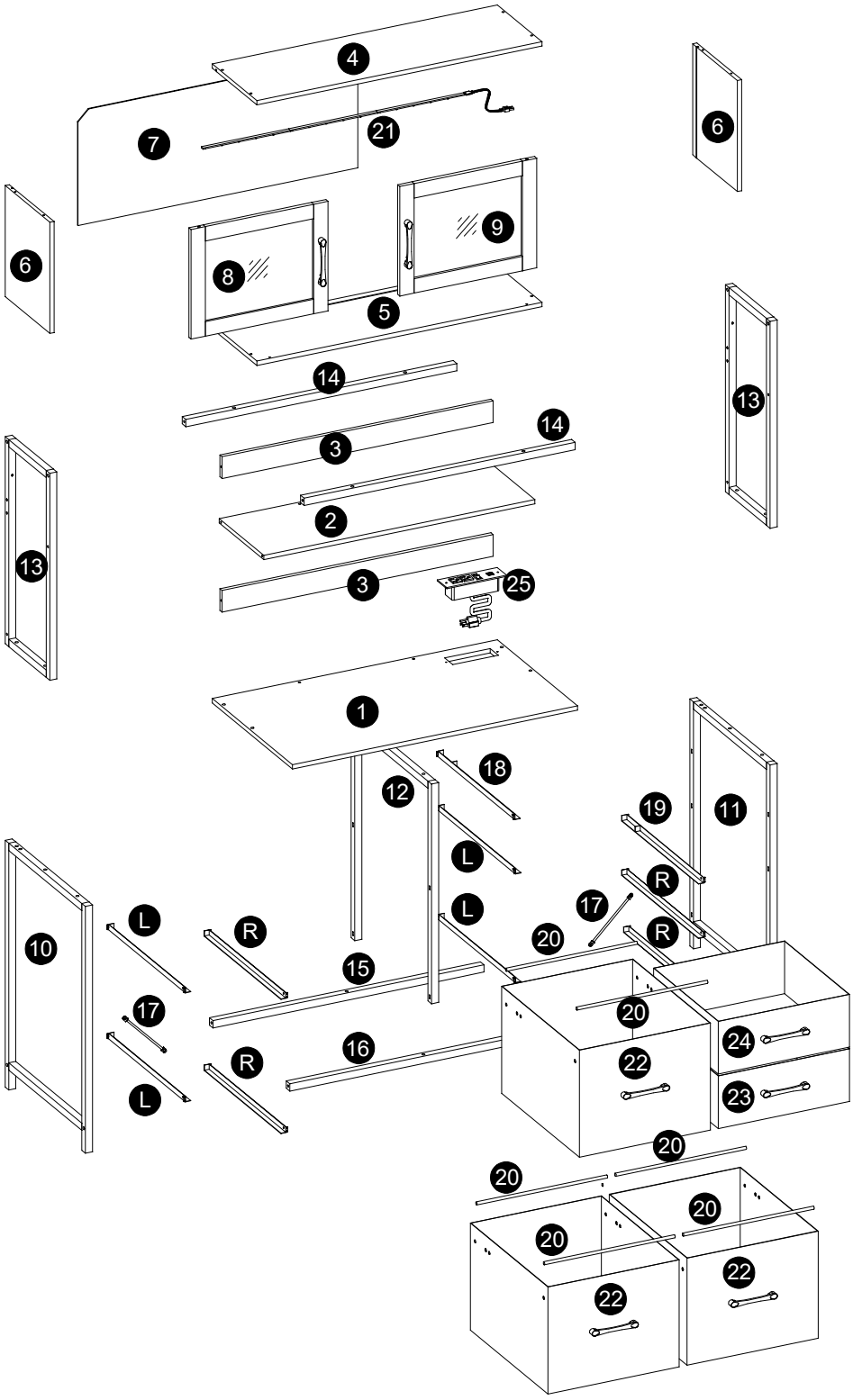

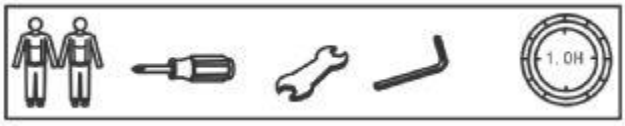

1 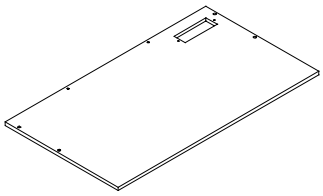 X1	2 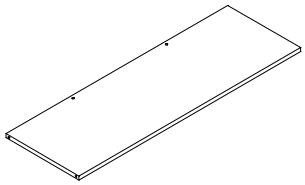 X1	3 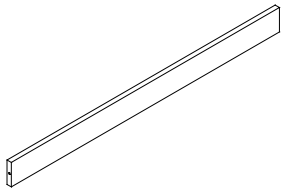 X2
4 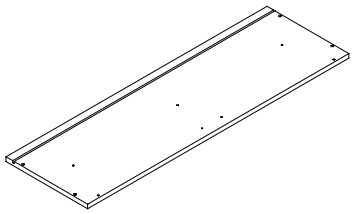 X1	5 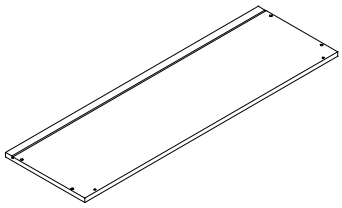 1	6 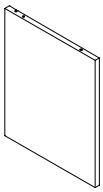 X2
7 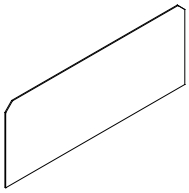 X1	8 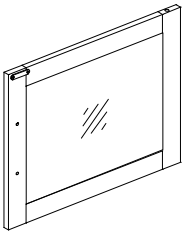 X1	9 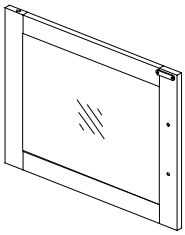 X1
10 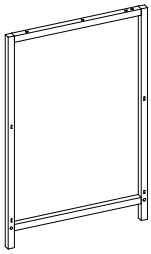 X1	11 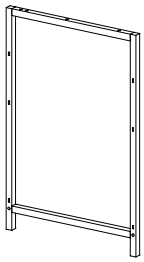 X1	12 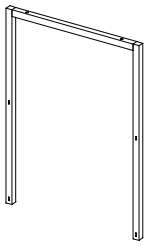 X1
13 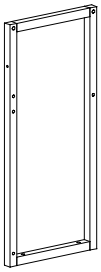 X2	14 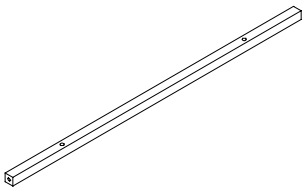 X2	15 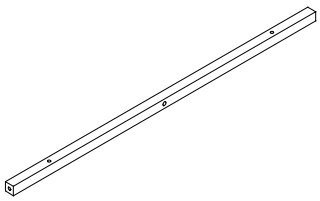 X1
16 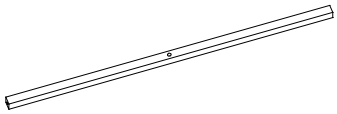 X1	17 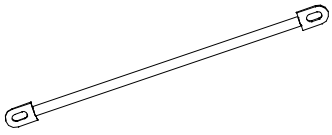 X2	18 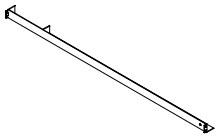 X1

19 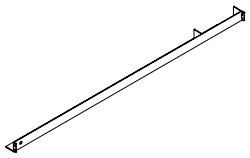 X1	20 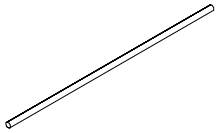 X6	21 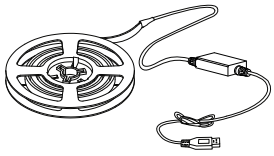 X1
22 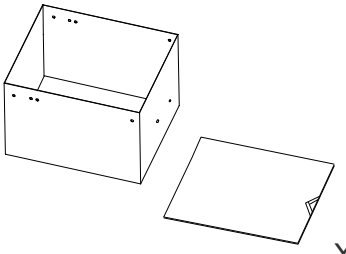 X3	23 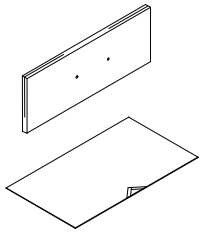 X1	24 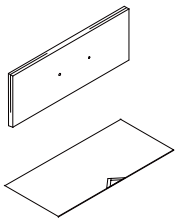 X1
25 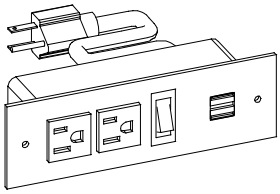 X1		

A M6X12 4+1 PCS	B M6X28 20+2 PCS	C M6X60 4+1 PCS	D M5X40 20+2 PCS	E M4X16 4+1 PCS
F M4x12 8+1 PCS	G M4x8 10+1 PCS	H M6 4+1 PCS	J M6 4 PCS	K M4X12 12+1 PCS
M 6 PCS	N 1 PCS	P 2 PCS	Q 2 PCS	S 4 PCS
T M3X12 3+1 PCS	U 7 PCS	V M6X30 M4X70 2+1 PCS	L 4 PCS	R 4 PCS
1 PCS	M4	M3	M10&12	

1.Matters needing attention

Be sure to use the proper screws to avoid damaging the parts

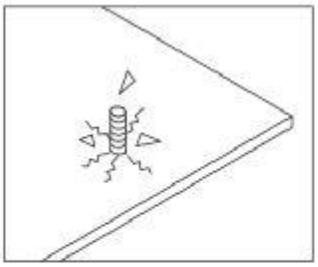

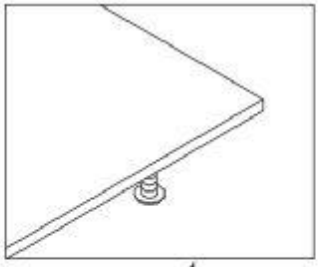

✕ Wrong screws can cause the plank to crack

√ The right screw is the right size

Matters needing attention

(1) When installing the screws in the installation step, the screws do not need to be tightened. After this installation step is confirmed and the holes are aligned, then tighten all the screws.

(2) If the screws are tightened during the installation process, it will cause problems such as misalignment of the screw holes and misalignment of the board in subsequent installations.

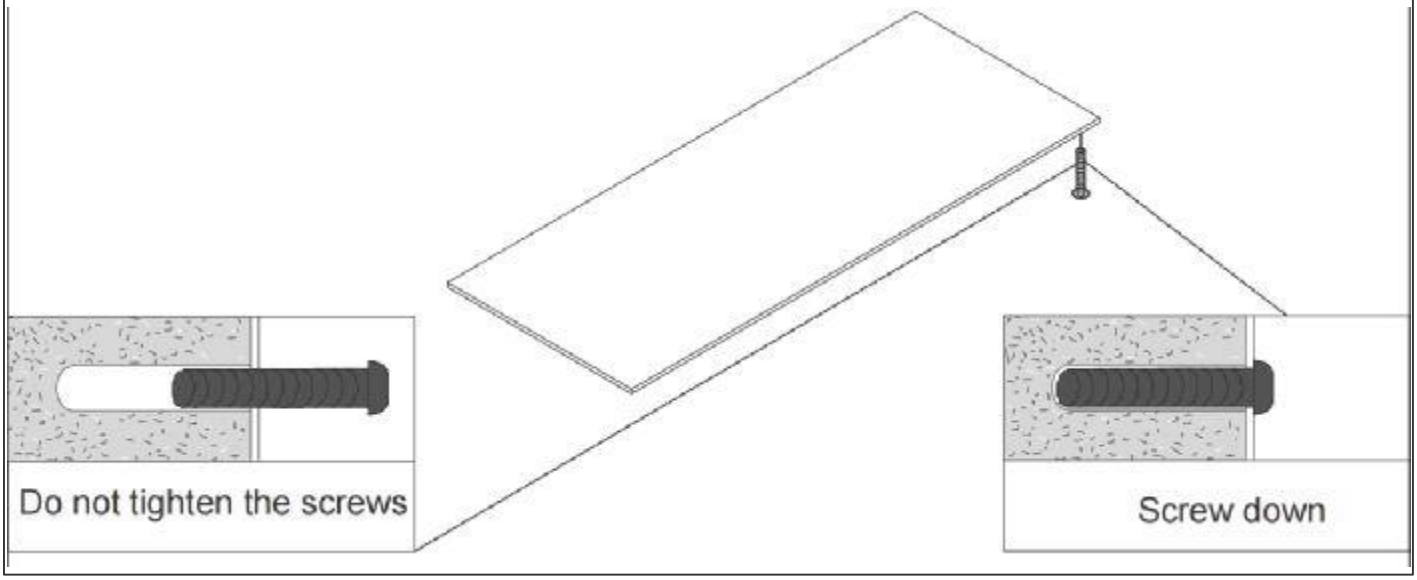

1

J M6

4 PCS

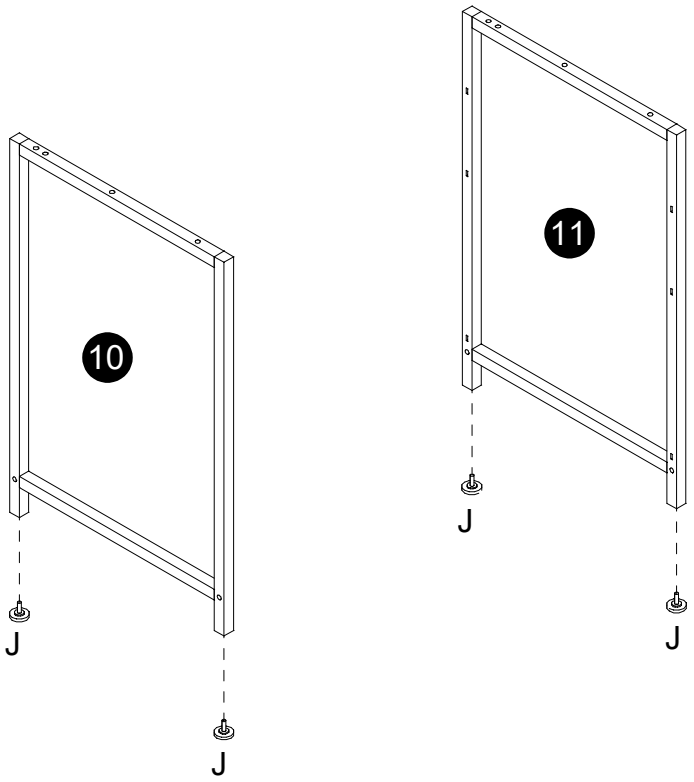

2

B M6X28

4 PCS

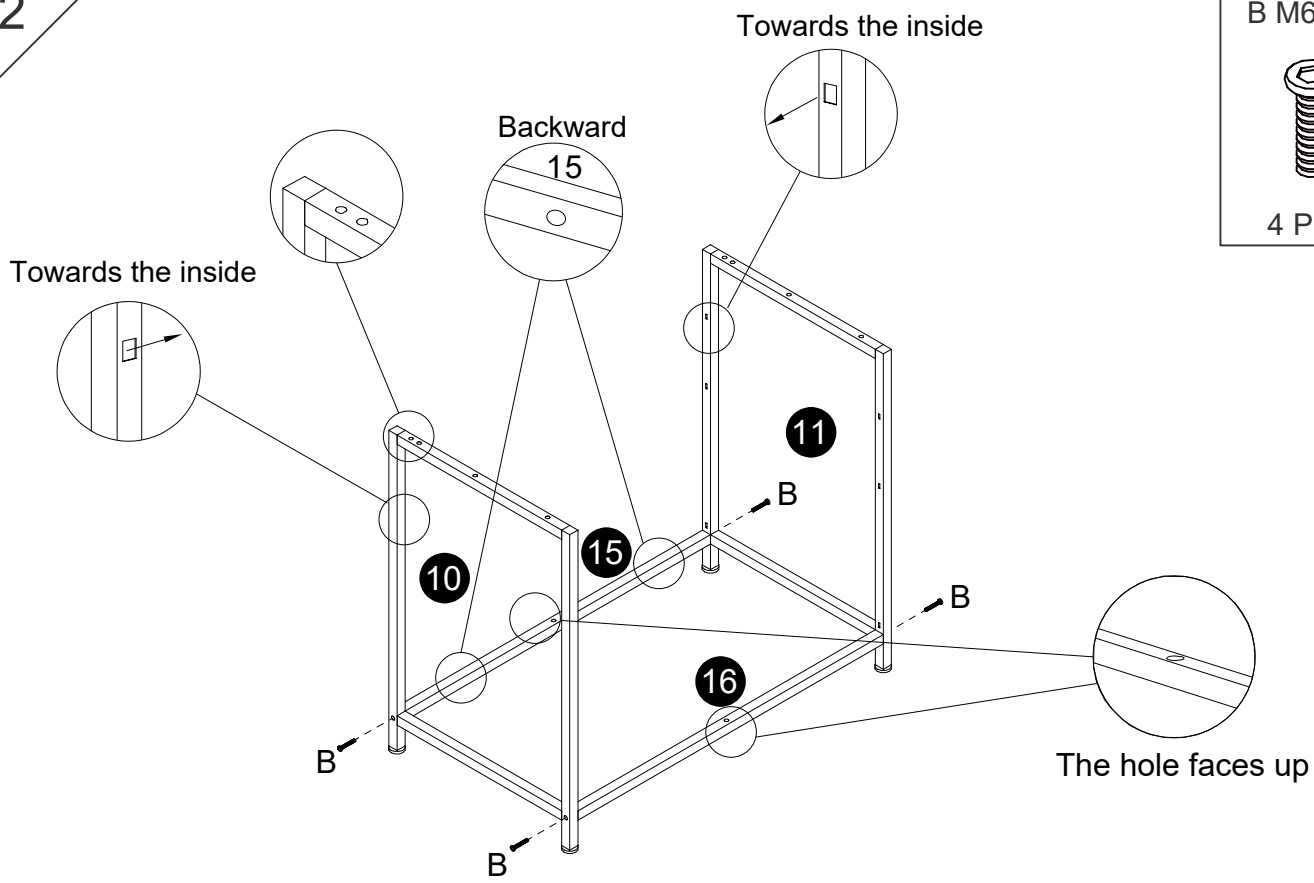

3

B M6X28

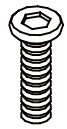

2 PCS

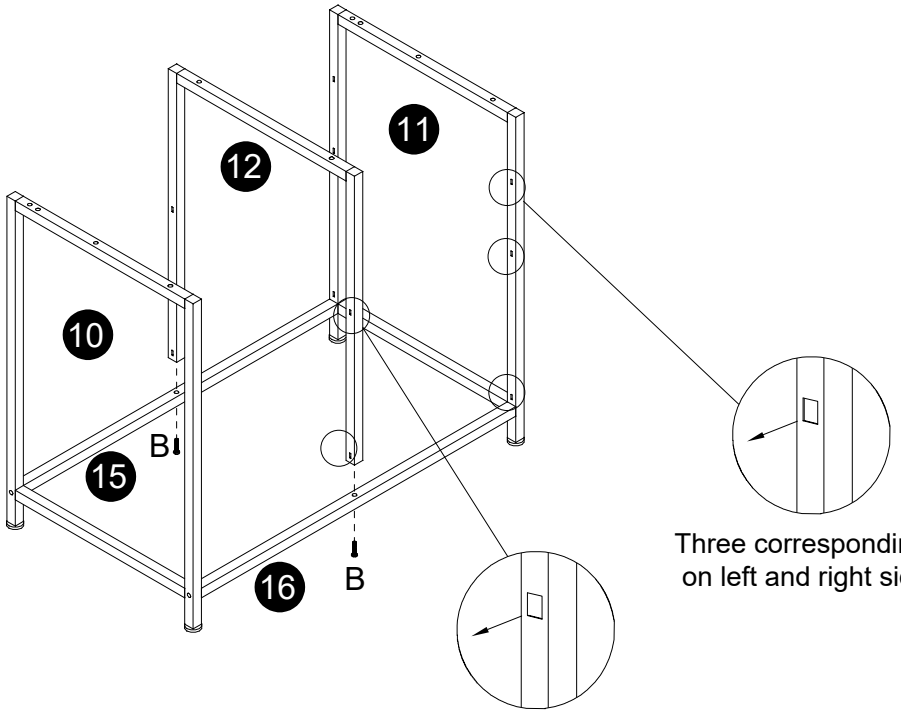

4

B M6X28

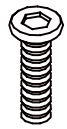

6 PCS

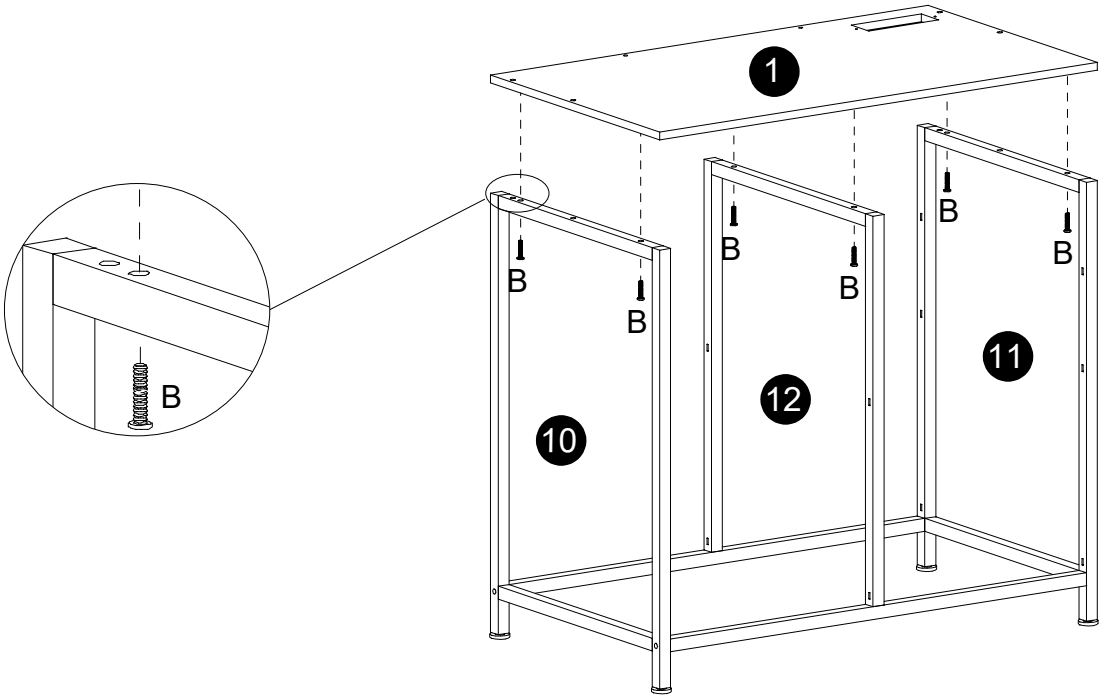

5

D M5X40

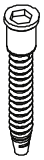

2 PCS

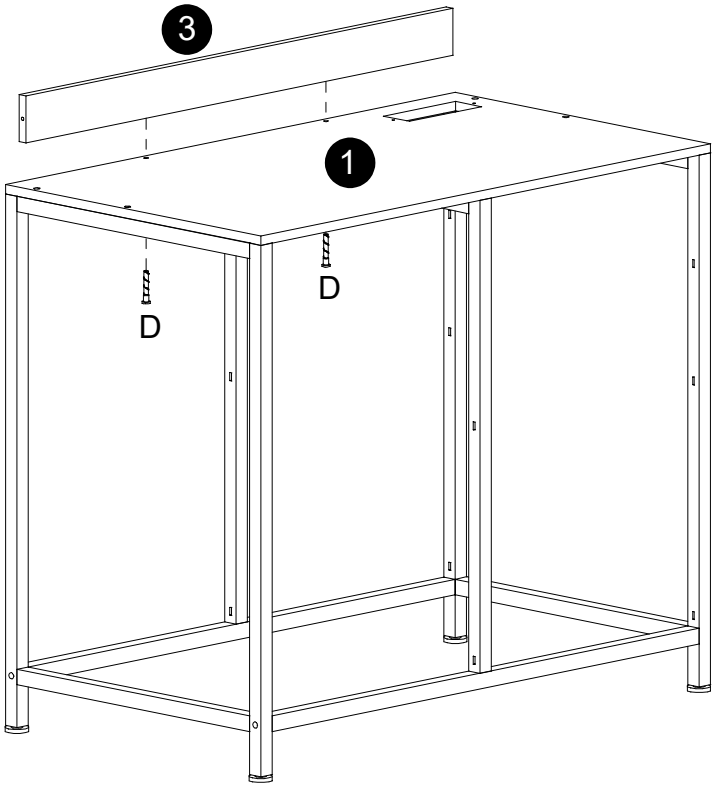

6

C M6X60

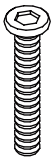

4 PCS

H M6

4 PCS

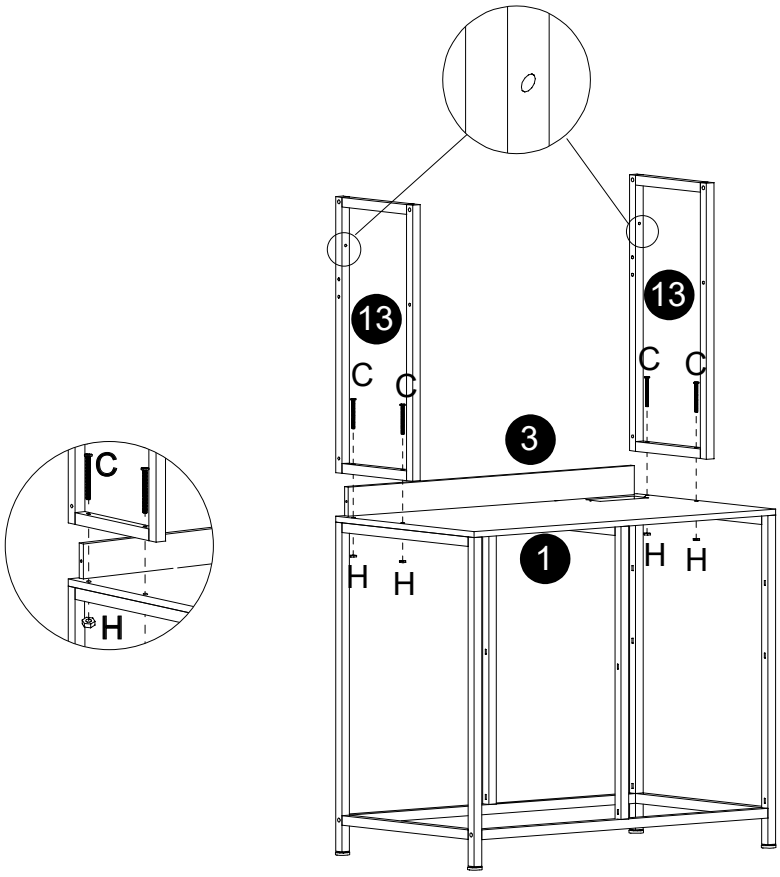

7

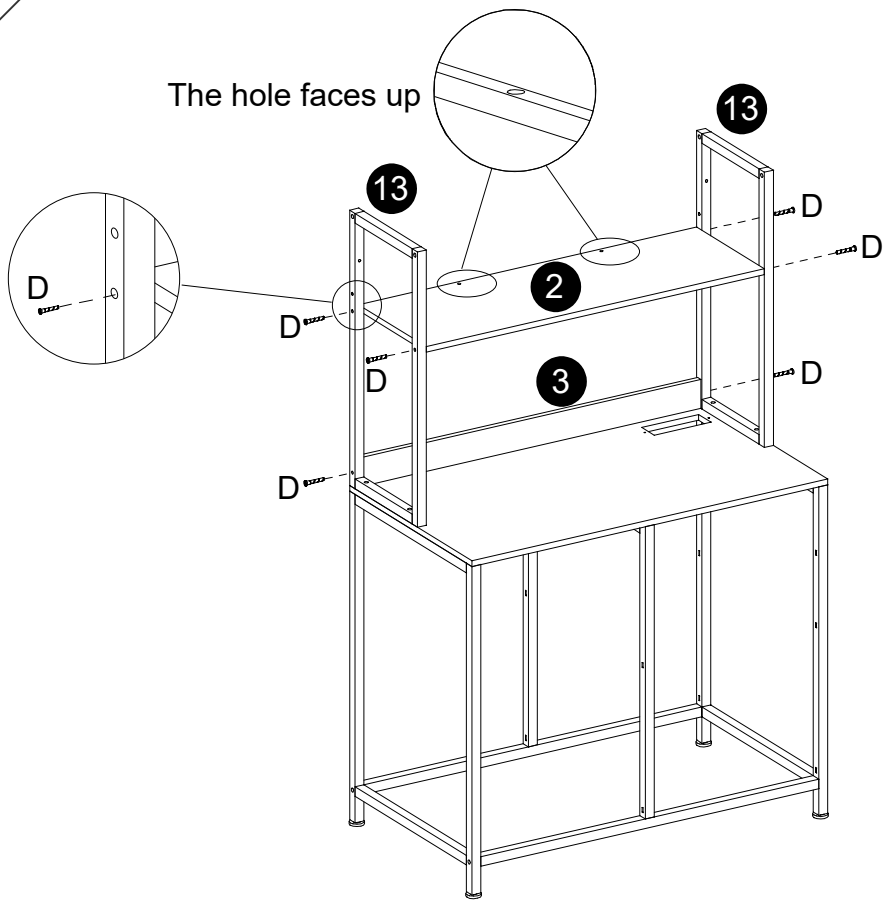

D M5X40

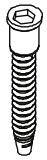

6 PCS

8

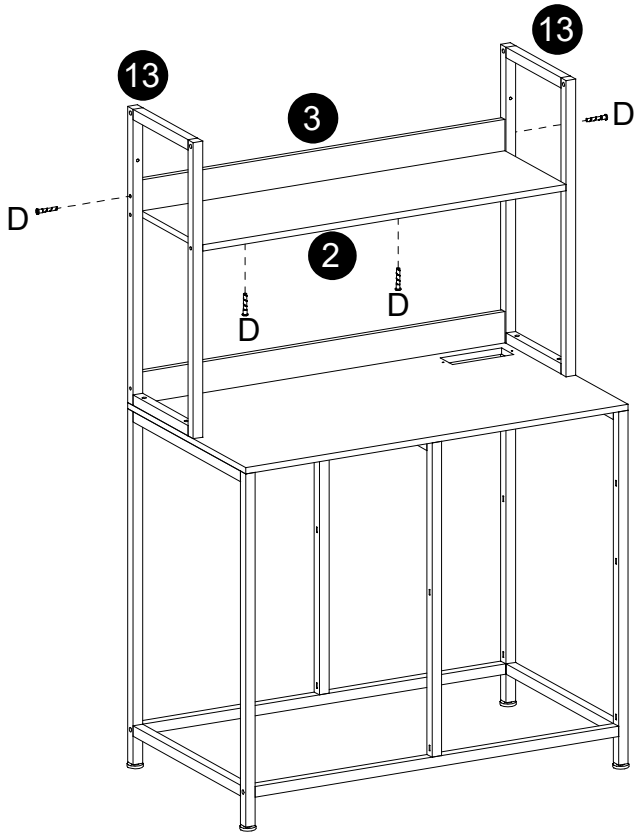

D M5X40

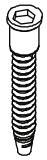

4 PCS

9

B M6X28

4 PCS

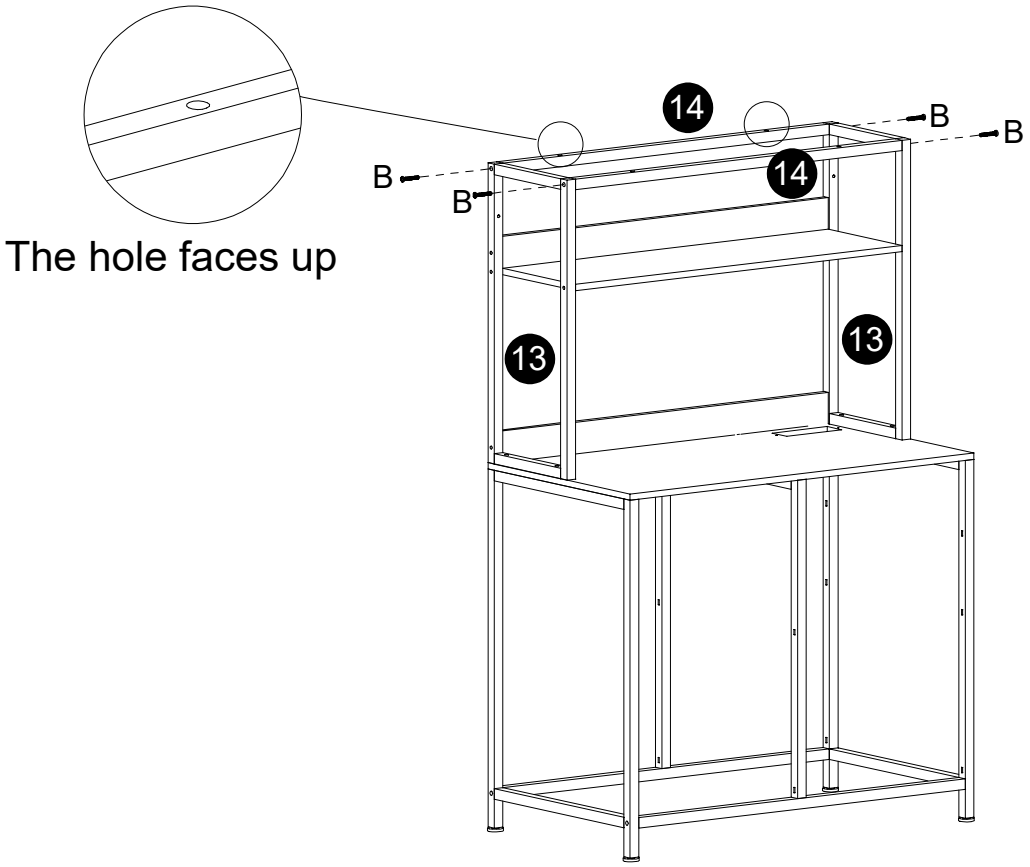

10

D M5X40

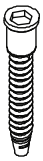

4 PCS

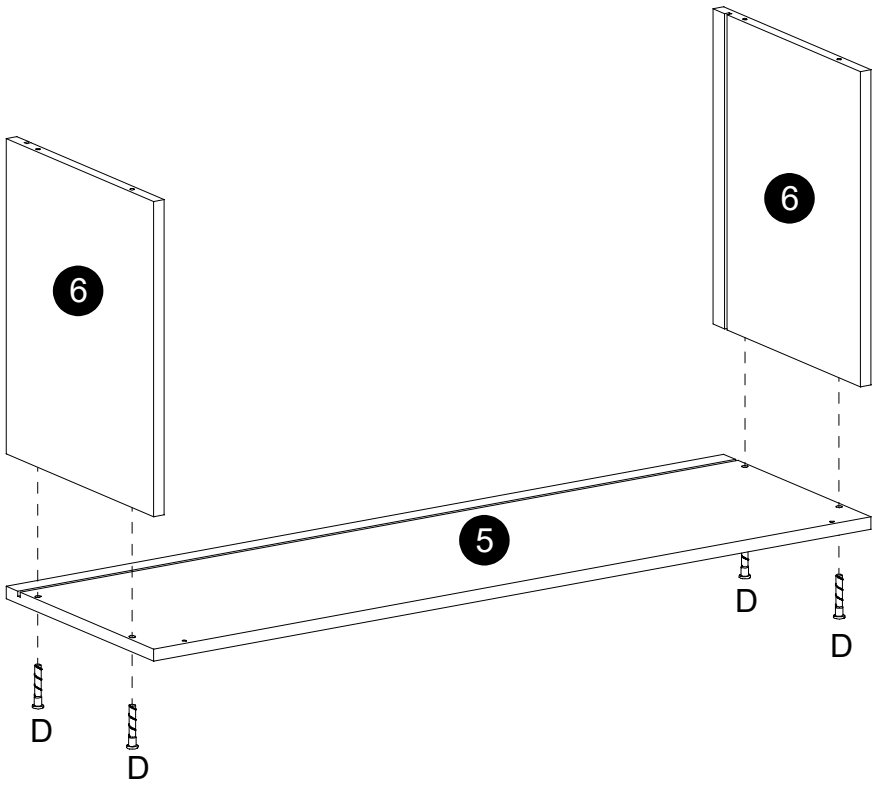

11

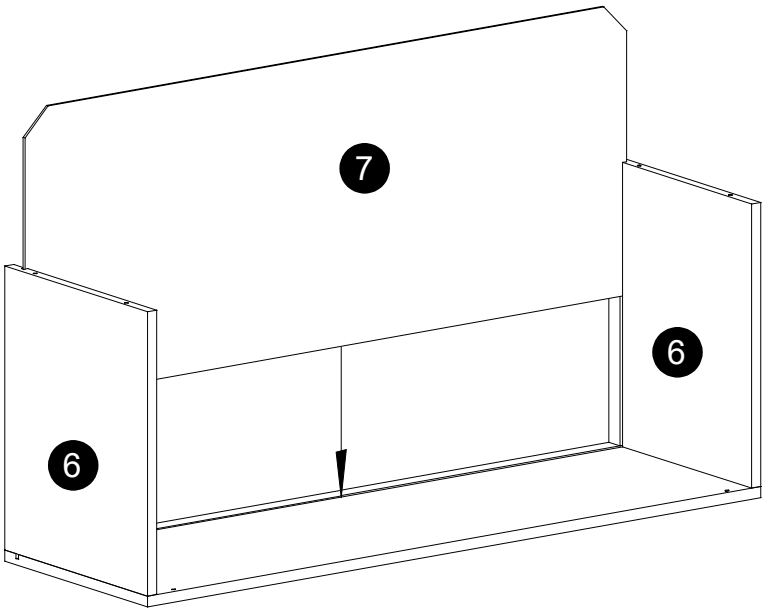

12

F M4X12	N
	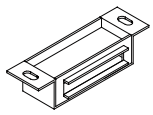
2 PCS	1 PCS

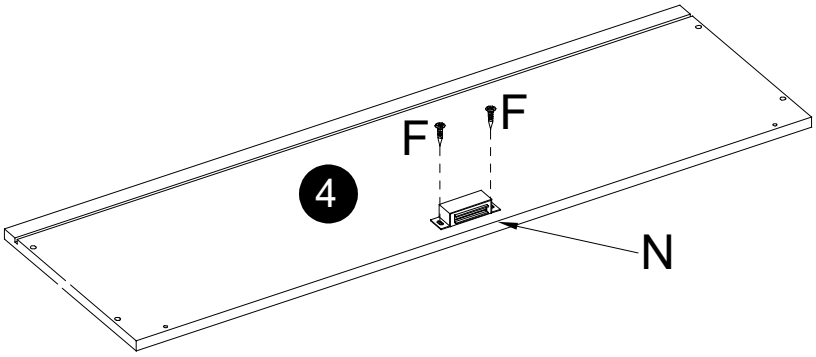

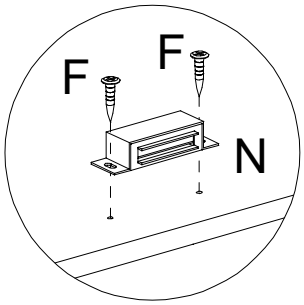

The magnetic port faces outward

13

D M5X40

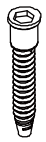

4 PCS

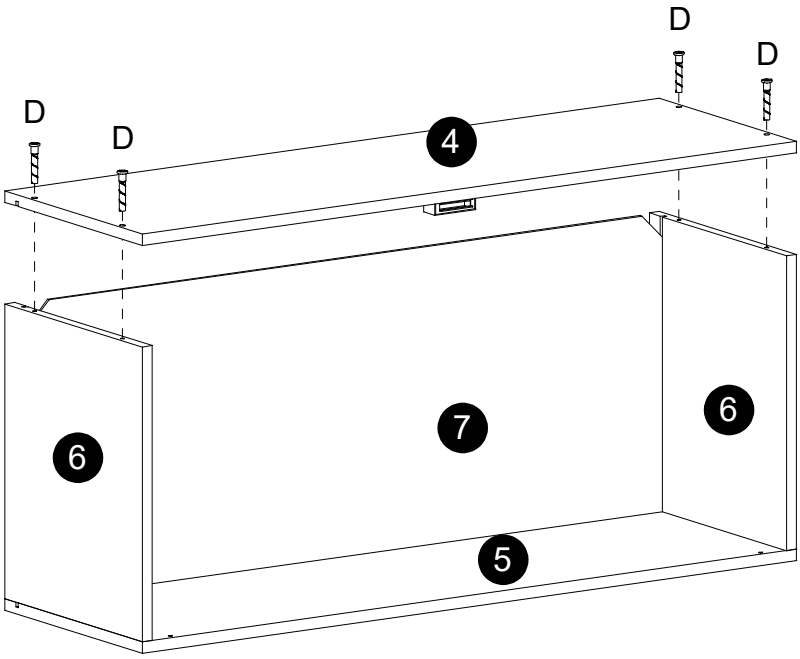

14

B M6X28

4 PCS

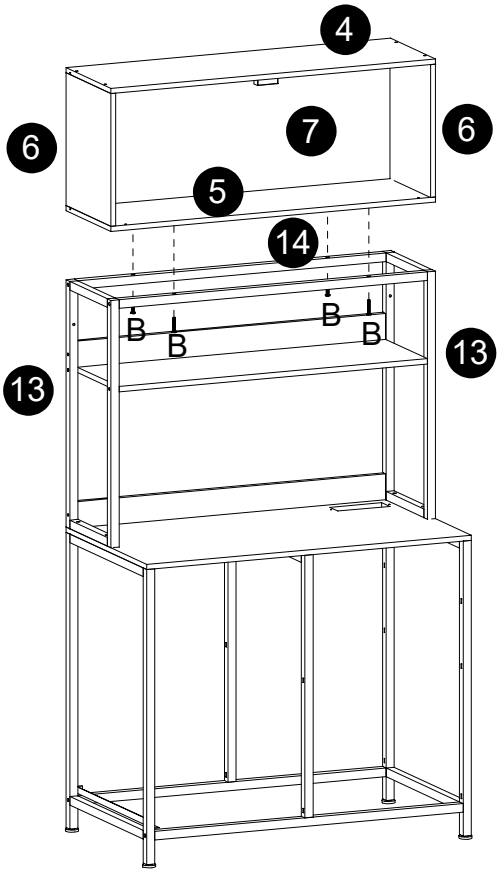

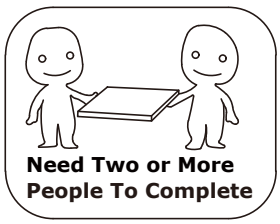

15

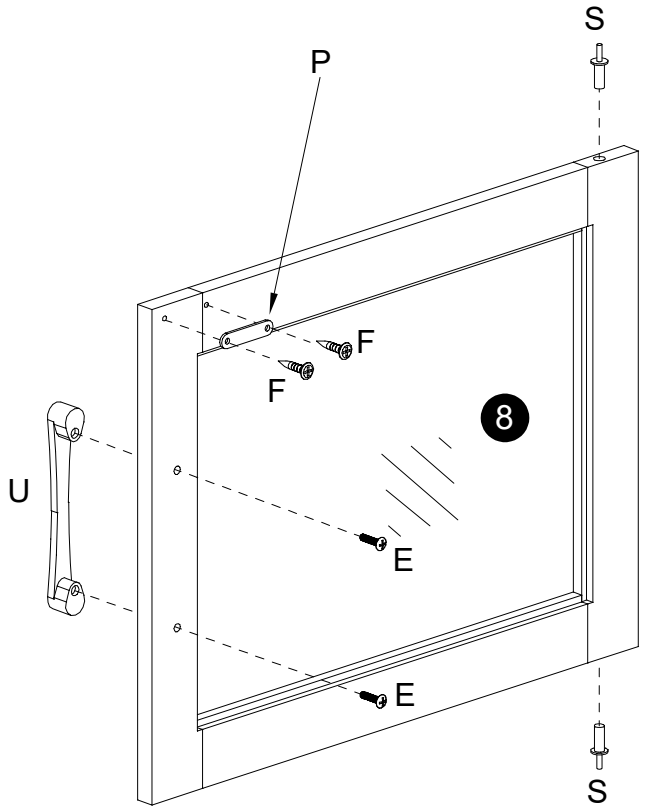

E M4X16	F M4X12	P
2 PCS	2 PCS	1 PCS
	S	U
	2 PCS	1 PCS

16

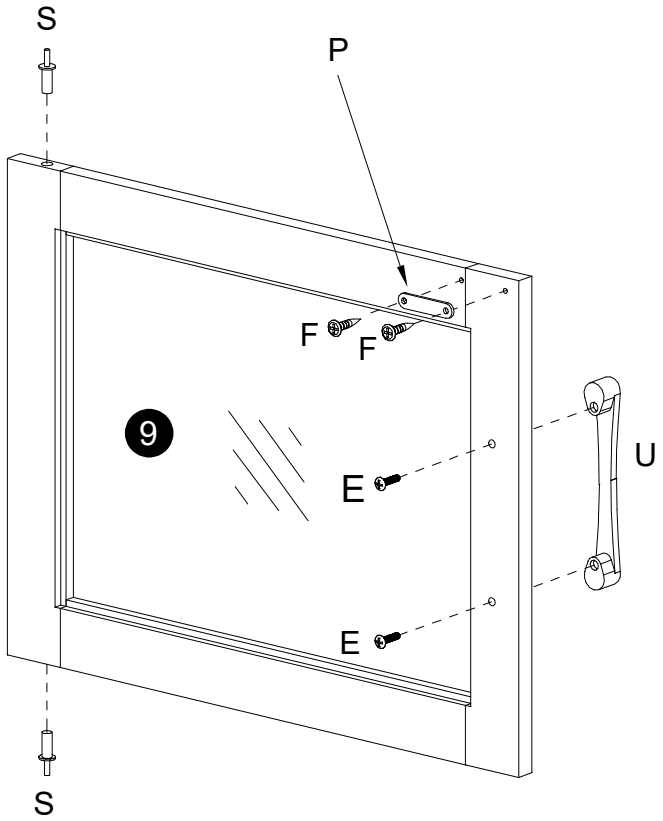

E M4X16	F M4X12	P
2 PCS	2 PCS	1 PCS
	S	U
	2 PCS	1 PCS

17

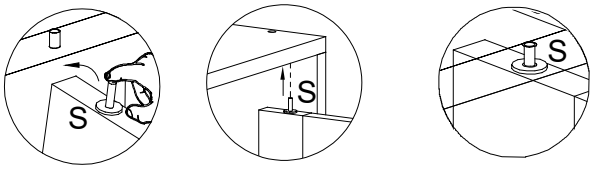

Press part S and hold

Move the door panel till part S into the hole at the top

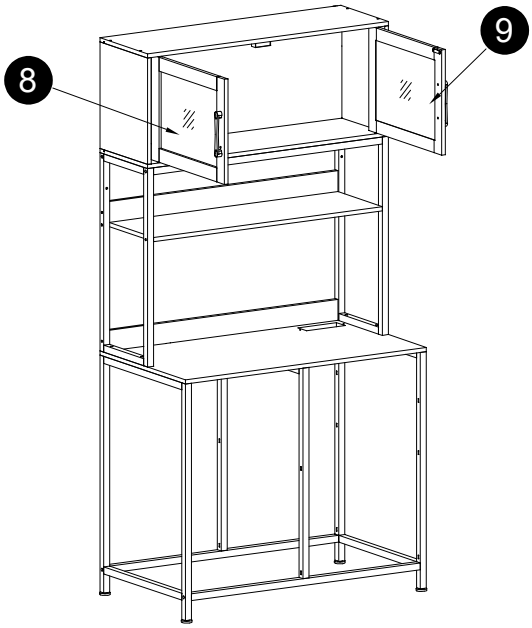

18

A M6X12	M
	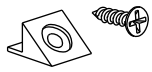
4 PCS	6 PCS

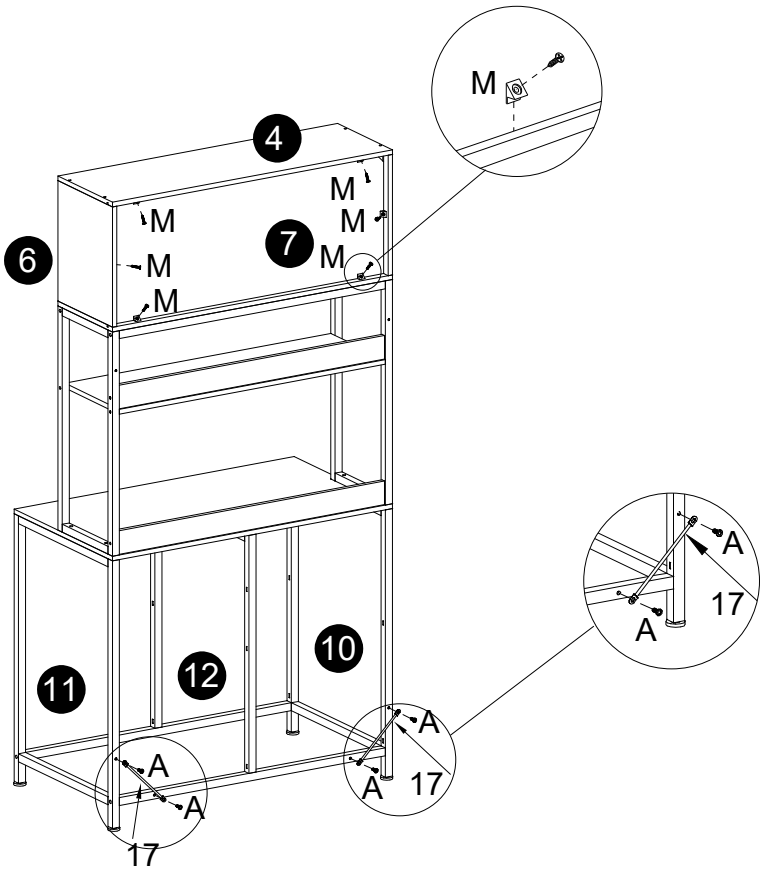

19

Step I: Mark the drilling positions on the wall with a pen

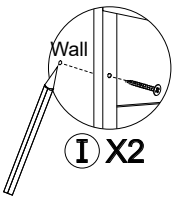

Ⅰ X2

Step II: Drill holes using an electric drill for 6×30mm.

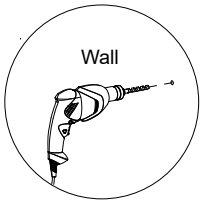

Ⅱ X2

Step III: Use a hammer to drive screw into the wall.

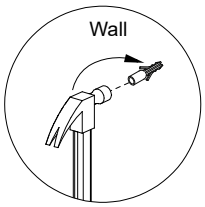

Ⅲ X2

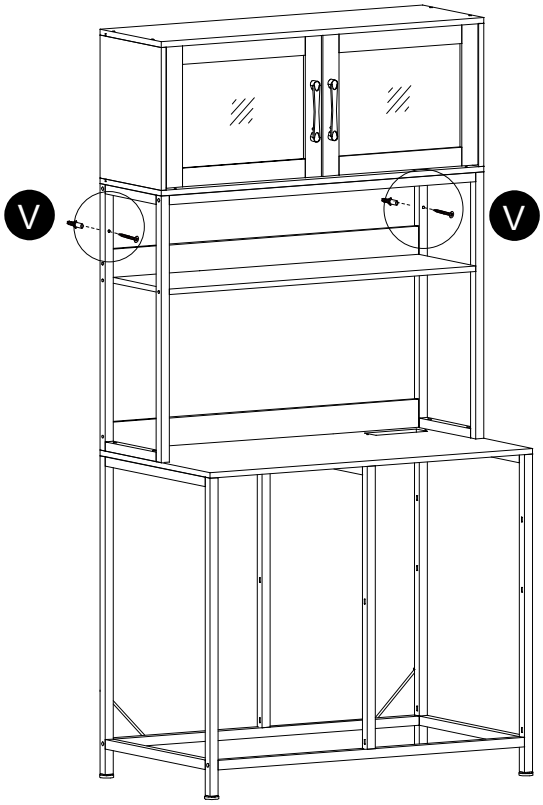

V

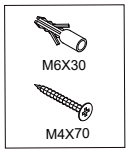

2 PCS

20

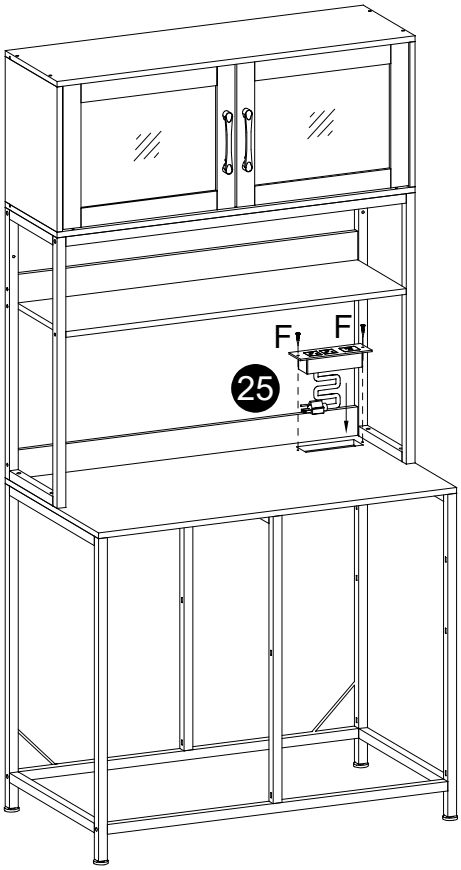

F M4X12

2 PCS

21

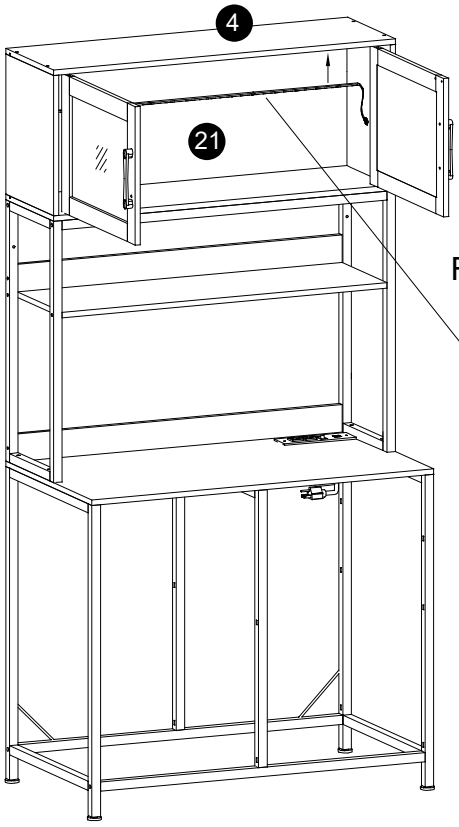

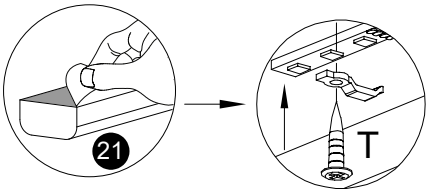

Rip the protective paper

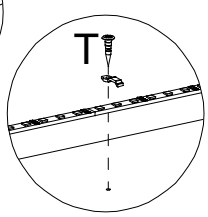

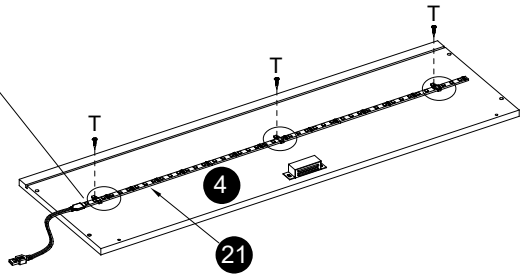

LED Strip Installation Details

T

3 PCS

22

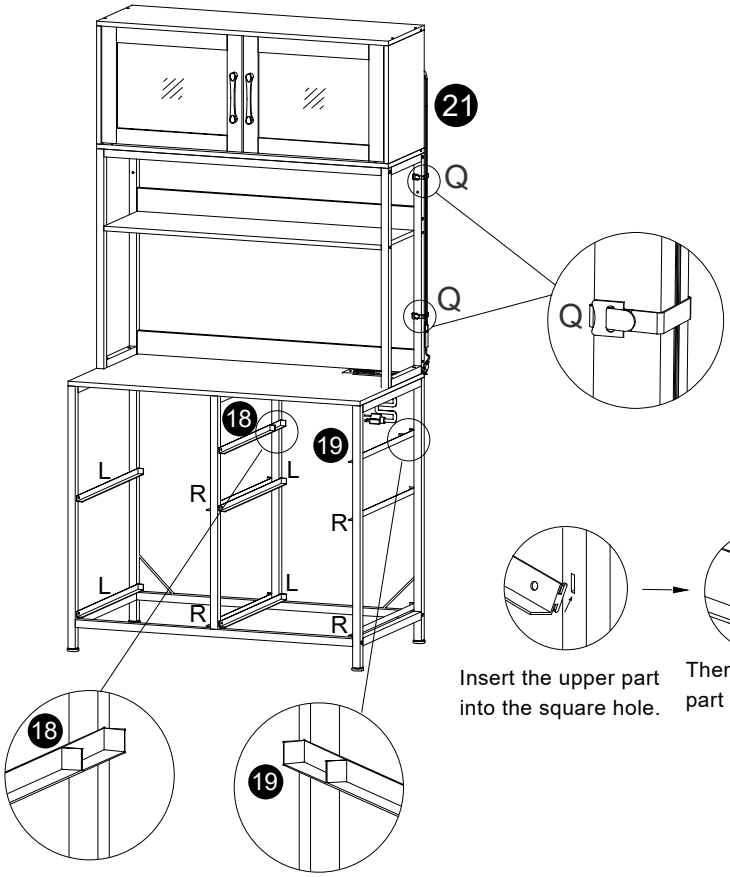

L

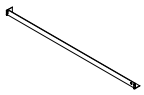

4 PCS

R

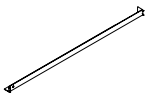

4 PCS

Q

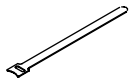

2 PC

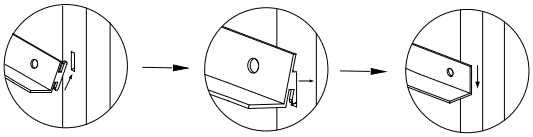

Insert the upper part into the square hole.

Then insert the rest part horizontally.

Press down the rail to ensure proper installation.

23

G M4X8	K M4X12	U
6 PCS	12 PCS	3 PCS

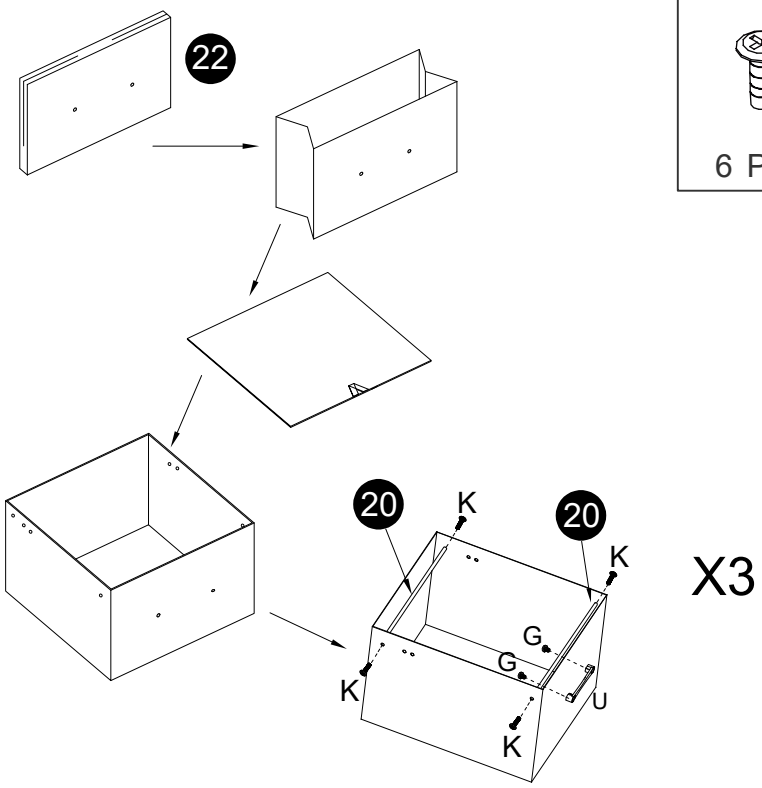

24

G M4X8	U
2 PCS	1 PCS

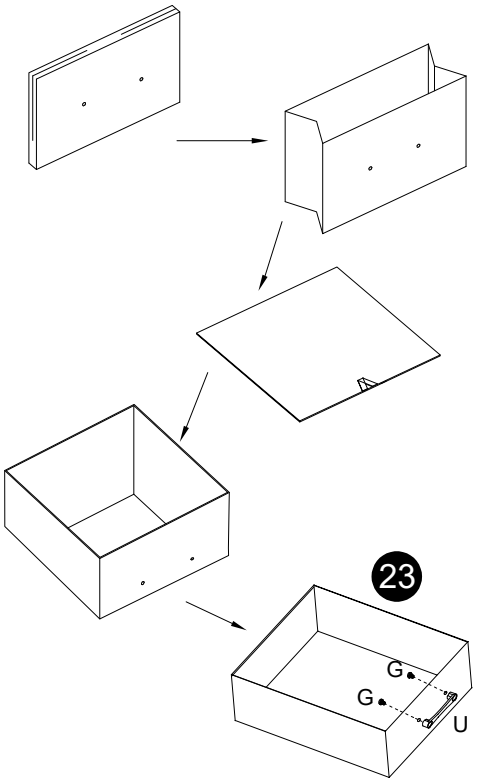

25

G M4X8	U
	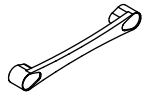
2 PCS	1 PCS

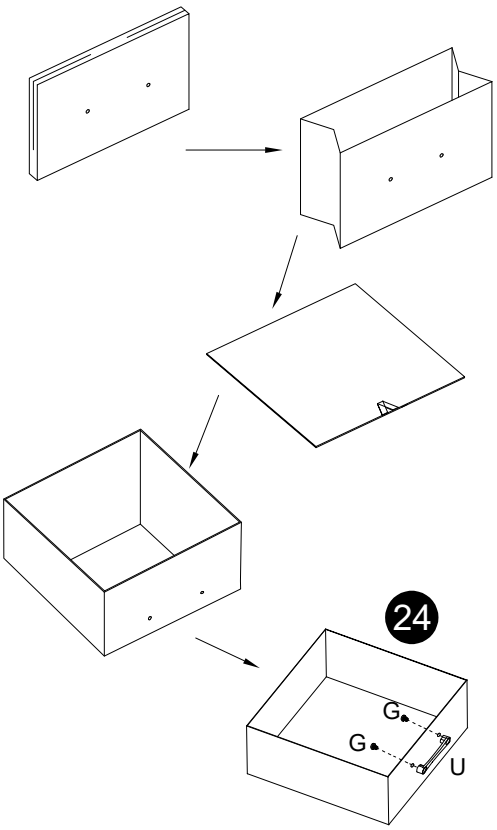
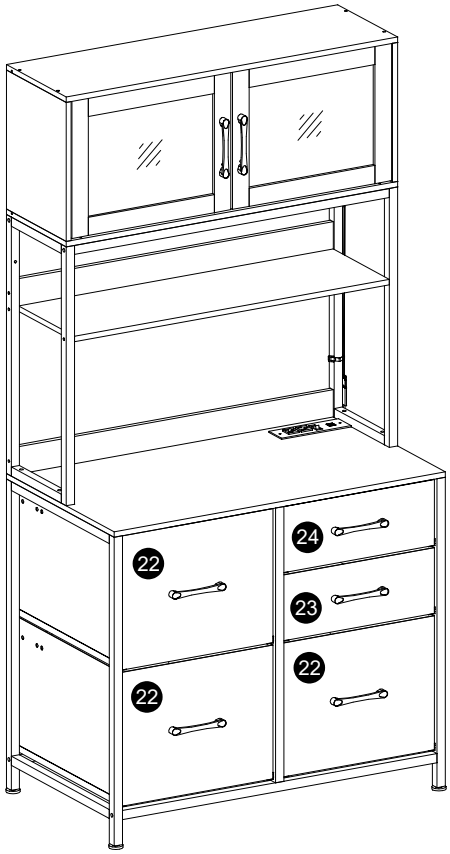
26