N605P540099
N605P540100
N605P540101

Product manual

Gebrauchsanweisung

Manuel du produit

Manual del producto

Manuale del prodotto

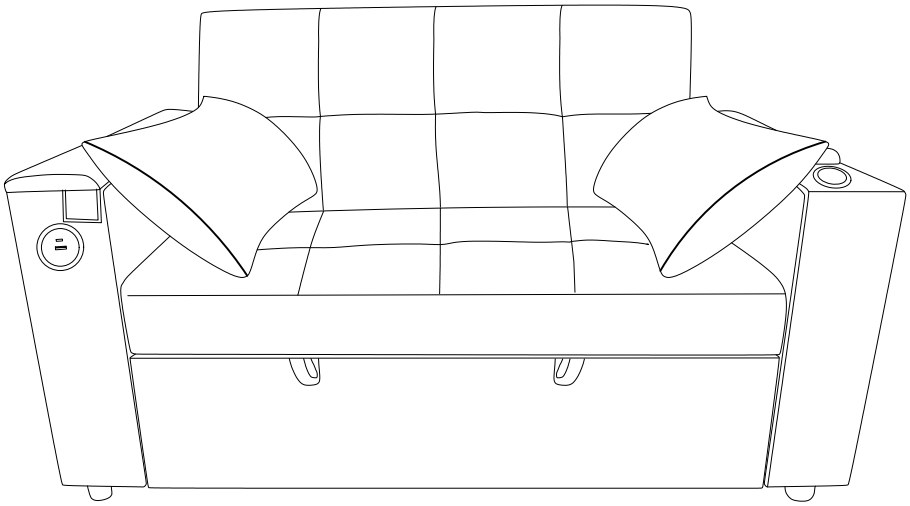

EN:Our product will be delivered to you in 3 packages, The delivery times of these 3 packagesmay differ,please bepatient and thank you for your understanding

FR:Notre produit vous sera livré en 3 colis.Les delais delivraison de ces 3 colis peuvent différer,soyezpatient et merci de votre compréhension.

DE:Unser Produkt wird lhnen in 3 Paketen geliefert.Die Lieferzeiten dieser 3 Paketekonnenabweichen,bitte habenSie etwas Geduld und vielen Dank fur lhr Verstandnis

IT:llnostroprodottosaraconsegnatoin3pacchetti. Itempidiconsegnadiquestipacchettipossonodifferire, vipreghiamodiaverepazienzaegrazieperlavostracomprensione.

ES:Nuestroproductoseentregaráen3paquetes. Lostiemposdeentregadeestospaquetespuedenvariar,porfavor, tengapacienciaygraciasporsucomprensión.

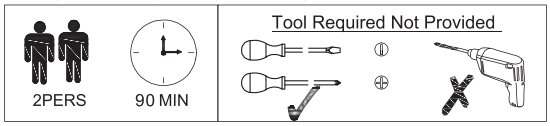



[DE]
Warnung: Lesen Sie diese Anleitung vor dem Zusammenbau bitte vollständig durch. Überprüfen Sie, ob Sie alle auf den Seiten aufgeführten Komponenten und Werkzeuge haben. Bewahren Sie die Anleitung zum späteren Nachschlagen auf. Teile des Zusammenbaus lassen sich mit 2 Personen leichter durchführen. Suchen Sie bei Bedarf professionelle Hilfe.
Warnung: Legen Sie alle Teile auf eine ebene Fläche. Legen Sie eine weiche Decke oder Ähnliches darunter, um sie vor Kratzern oder Flecken zu schützen. Vermeiden Sie es, Komponenten über den Boden zu ziehen oder zu schieben.
Warnung: Überprüfen Sie regelmäßig alle Beschläge und Befestigungen, um sicherzustellen, dass sie sicher sind und um Unfälle zu vermeiden. Wenn Teile fehlen, kaputt, beschädigt oder abgenutzt sind, verwenden Sie das Produkt nicht weiter, bis Reparaturen mit vom Hersteller autorisierten Teilen durchgeführt wurden.
Warnung: Stellen Sie Möbel nicht in die Nähe von Feuerquellen oder Gegenständen mit hohen Temperaturen, um Brandgefahr zu vermeiden. Stellen Sie Möbel nicht in feuchte Umgebungen, um Materialschäden zu vermeiden.
Warnung: Reinigen Sie Möbel mit einem feuchten Tuch oder Alkohol, vermeiden Sie die Verwendung von Reinigungsmitteln mit ätzenden Chemikalien.
Warnung: Lassen Sie Kinder nicht auf die Möbel klettern, da dies zum Umkippen und zu schweren Verletzungen führen kann. Bauen Sie die Möbel außerhalb der Reichweite von Kindern zusammen.
Warnung: Schwamm und Tuch können während des Transports gequetscht und verformt werden. Machen Sie sich keine Sorgen. Nachdem Sie sie aus der Tasche genommen haben, können Sie den Schwamm leicht abtupfen, um die Wiederherstellung der Elastizität zu beschleunigen, oder ihn einige Tage liegen lassen, damit er seine ursprüngliche Elastizität wiedererlangt.
Warnung: Stoffe können in direktem Sonnenlicht verblassen oder ihre Farbe ändern. Minimieren Sie direkte Sonneneinstrahlung, um die Lebensdauer Ihrer Möbel zu verlängern.



[EN]
Warning: Please read these instructions fully before starting assembly.Check you have all the components and tools listed on pages.Keep the instructions for later reference. Parts of the assembly will be easier with 2 people.Seek professional assistance if necessary.
Warning: Please place all parts on a flat surface.Place a soft blanket or similar underneath to protect against scratches or stains. Avoid dragging or sliding components across the floor.
Warning: Regularly check all fittings and fastenings to ensure they are secure and to prevent accidents.If any parts are missing, broken, damaged, or worn, discontinue use of the product until repairs have been made using factory authorized parts.
Warning: Do not place furniture close to fire sources or high-temperature objects to avoid the risk of fire. Do not place furniture in damp environments to prevent material damage.
Warning: Clean furniture with a damp cloth or alcohol, avoid using cleaning agents containing corrosive chemicals.
Warning: Do not allow children to climb on the furniture as this may result in tipping and serious personal injury.Assemble the furniture away from the reach of children.
Warning:The sponge and cloth may be squeezed and deformed during transportation, please don't worry, after you take it out of the bag, you can gently pat the sponge to speed up the recovery of elasticity, or leave it for a few days, it can recover to its origina elasticity.
Warning: Fabrics can fade or change color in direct sunlight. Minimize direct sunlight exposure to extend the life of your furniture.



[FR]
Attention : Veuillez lire attentivement ces instructions avant de commencer l'assemblage. Vérifiez que vous disposez de tous les composants et outils répertoriés sur les pages. Conservez les instructions pour référence ultérieure. Certaines parties de l'assemblage seront plus faciles à 2 personnes. Demandez l'aide d'un professionnel si nécessaire.
Attention : Veuillez placer toutes les pièces sur une surface plane. Placez une couverture douce ou similaire en dessous pour les protéger des rayures ou des taches. Évitez de faire glisser les composants sur le sol.
Attention : Vérifiez régulièrement tous les accessoires et fixations pour vous assurer qu'ils sont bien fixés et pour éviter les accidents. Si des pièces manquent, sont cassées, endommagées ou usées, cessez d'utiliser le produit jusqu'à ce que les réparations aient été effectuées à l'aide de pièces agréées par l'usine.
Attention : Ne placez pas les meubles à proximité de sources de feu ou d'objets à haute température pour éviter tout risque d'incendie. Ne placez pas les meubles dans des environnements humides pour éviter tout dommage matériel.
Attention : Nettoyez les meubles avec un chiffon humide ou de l'alcool, évitez d'utiliser des produits de nettoyage contenant des produits chimiques corrosifs.
Attention : Ne laissez pas les enfants grimper sur les meubles car cela pourrait entraîner un basculement et des blessures graves. Assemblez les meubles hors de portée des enfants.
Attention : l'éponge et le chiffon peuvent être comprimés et déformés pendant le transport, ne vous inquiétez pas, après l'avoir sorti du sac, vous pouvez tapoter doucement l'éponge pour accélérer la récupération de l'élasticité, ou la laisser pendant quelques jours, elle peut retrouver son élasticité d'origine.
Attention : les tissus peuvent se décolorer ou changer de couleur en plein soleil. Réduisez l'exposition directe au soleil pour prolonger la durée de vie de vos meubles.



[IT]
Attenzione: leggere attentamente queste istruzioni prima di iniziare il montaggio. Verificare di avere tutti i componenti e gli strumenti elencati nelle pagine. Conservare le istruzioni per riferimento futuro. Alcune parti del montaggio saranno più facili con 2 persone. Se necessario, chiedere assistenza professionale.
Attenzione: posizionare tutte le parti su una superficie piana. Posizionare una coperta morbida o simile sotto per proteggere da graffi o macchie. Evitare di trascinare o far scivolare i componenti sul pavimento.
Attenzione: controllare regolarmente tutti i raccordi e i dispositivi di fissaggio per assicurarsi che siano sicuri e per prevenire incidenti. Se alcune parti sono mancanti, rotte, danneggiate o usurate, interrompere l'uso del prodotto fino a quando non siano state effettuate le riparazioni utilizzando parti autorizzate dalla fabbrica.
Attenzione: non posizionare i mobili vicino a fonti di fuoco o oggetti ad alta temperatura per evitare il rischio di incendio. Non posizionare i mobili in ambienti umidi per evitare danni materiali.
Attenzione: pulire i mobili con un panno umido o alcol, evitare di utilizzare detergenti contenenti sostanze chimiche corrosive.
Attenzione: non consentire ai bambini di arrampicarsi sui mobili poiché ciò potrebbe causare ribaltamenti e gravi lesioni personali. Montare i mobili lontano dalla portata dei bambini.
Attenzione: la spugna e il panno potrebbero schiacciarsi e deformarsi durante il trasporto, non preoccuparti, dopo averli tolti dalla borsa , puoi picchiettare delicatamente la spugna per accelerare il recupero dell'elasticità, oppure lasciarla per qualche giorno, in modo che possa recuperare la sua elasticità originale.
Attenzione: i tessuti possono sbiadire o cambiare colore alla luce solare diretta. Riduci al minimo l'esposizione alla luce solare diretta per prolungare la durata dei tuoi mobili.



[ES]
Advertencia: Lea estas instrucciones completamente antes de comenzar el montaje. Compruebe que tiene todos los componentes y herramientas que se enumeran en las páginas. Conserve las instrucciones para consultarlas más adelante. El montaje de algunas partes será más sencillo con 2 personas. Busque ayuda profesional si es necesario.
Advertencia: Coloque todas las piezas sobre una superficie plana. Coloque una manta suave o algo similar debajo para protegerlas de rayones o manchas. Evite arrastrar o deslizar los componentes por el piso.
Advertencia: Revise regularmente todos los accesorios y fijaciones para asegurarse de que estén seguros y evitar accidentes. Si falta alguna pieza, está rota, dañada o desgastada, deje de usar el producto hasta que se hayan realizado las reparaciones con piezas autorizadas de fábrica.
Advertencia: No coloque los muebles cerca de fuentes de fuego u objetos a alta temperatura para evitar el riesgo de incendio. No coloque los muebles en ambientes húmedos para evitar daños materiales.
Advertencia: Limpie los muebles con un paño húmedo o alcohol, evite usar agentes de limpieza que contengan químicos corrosivos.
Advertencia: No permita que los niños se suban a los muebles ya que esto puede provocar que se vuelquen y lesiones personales graves. Monte los muebles fuera del alcance de los niños.
Advertencia: La esponja y el paño pueden apretarse y deformarse durante el transporte. No se preocupe, después de sacarlo de la bolsa, puede dar golpecitos suaves a la esponja para acelerar la recuperación de la elasticidad, o dejarlo unos días, puede recuperar su elasticidad original.
Advertencia: Las telas pueden desteñirse o cambiar de color con la luz solar directa. Minimice la exposición directa a la luz solar para prolongar la vida útil de sus muebles.

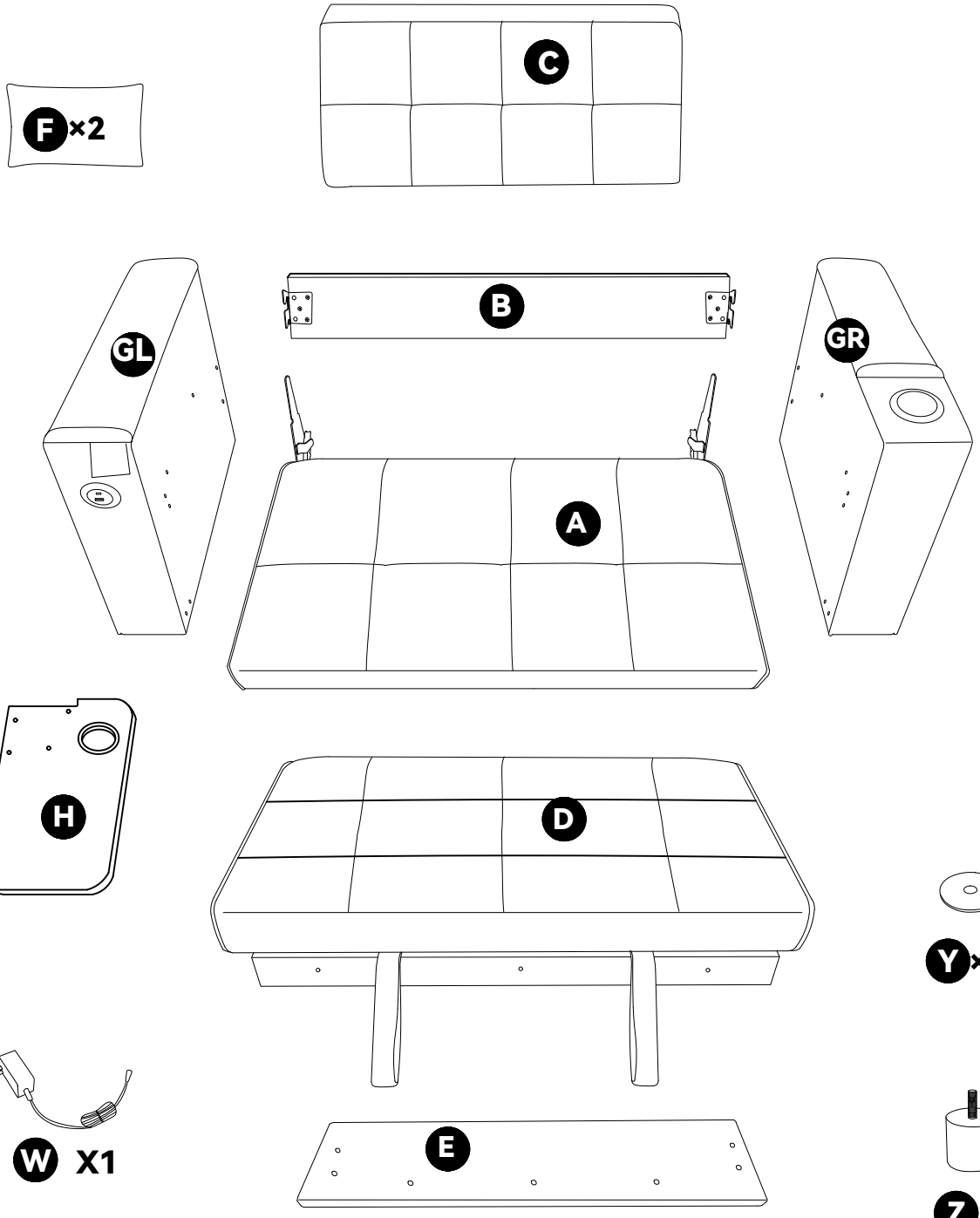
F×2
C
B
GL
GR
A
H
D
Y×4
W X1
E
Z×4
1×1
2×4
3-L×1
3-R×1
4×28
M6×15MM
5×3
M6×30MM
6×4
M6×80MM
7×4
M6*3
8×6
9×24
M5×15MM

N605P540099

1	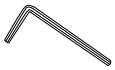	×1
2	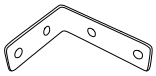	×4
3-L	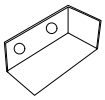	×1
3-R	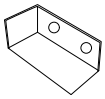	×1
4	 M6×15MM	×28
5	 M6×30MM	×3
6	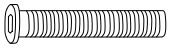 M6×80MM	×4
A	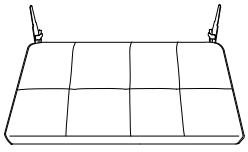	×1

7	 M6*3	×4
8		×6
9	 M5×15MM	×24
W	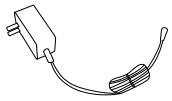	X1
Y		×4
Z	 5CM	×4
B	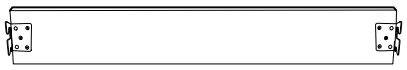	×1
C	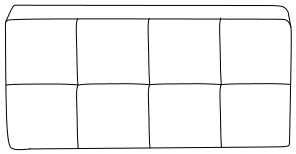	×1

N605P540100

D	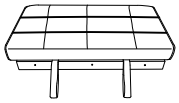	×1
E	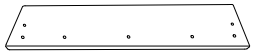	×1

N605P540101

GL	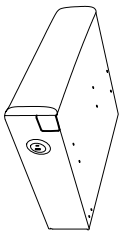	×1
GR	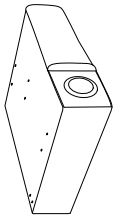	×1
H	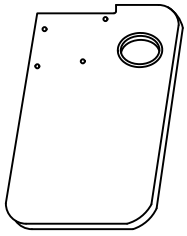	×1
F	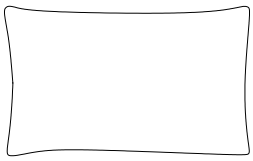	×2

1

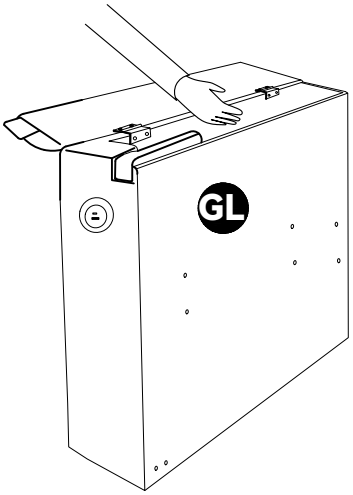

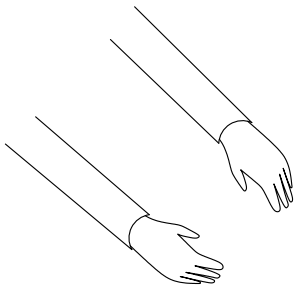

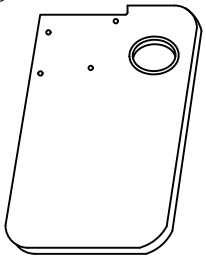

H ×1

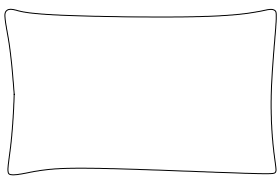

F ×2

2

M6×15MM

4 ×4

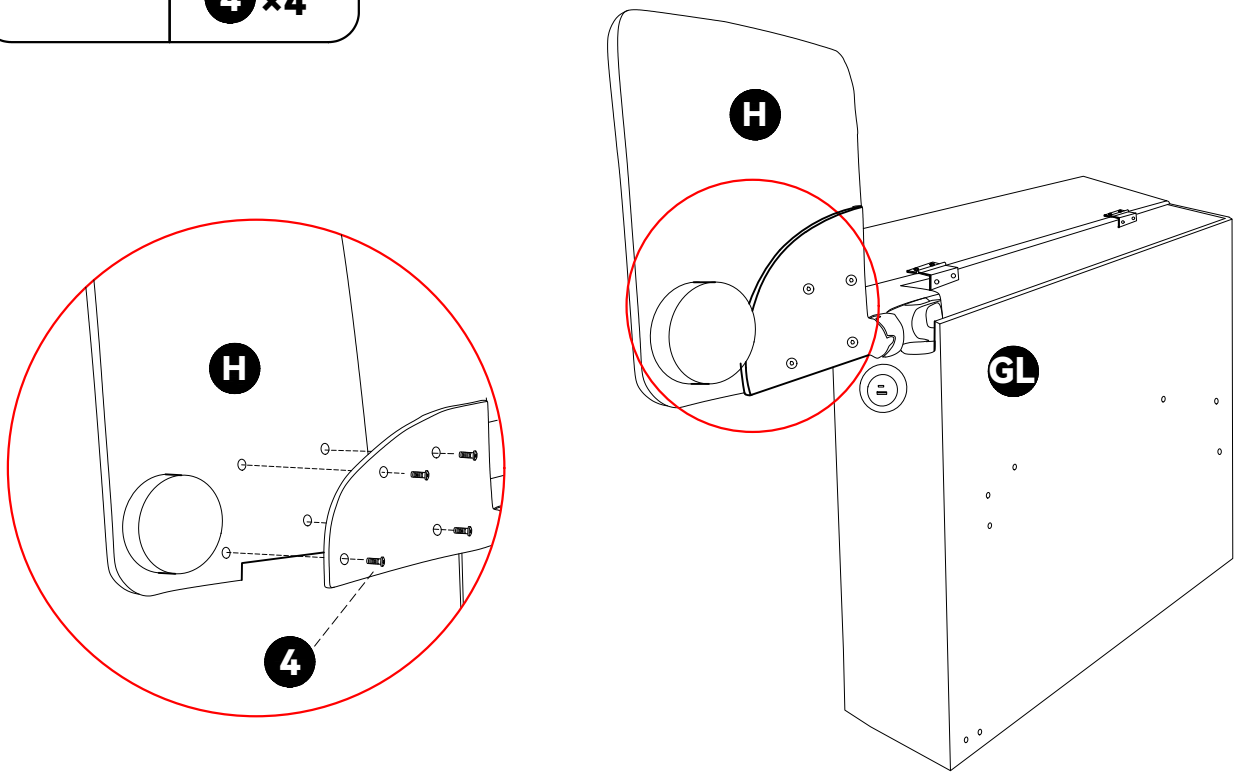

3

2 ×2

3-L×1

3-R×1

M6×15MM

4 ×12

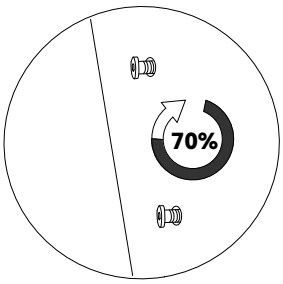

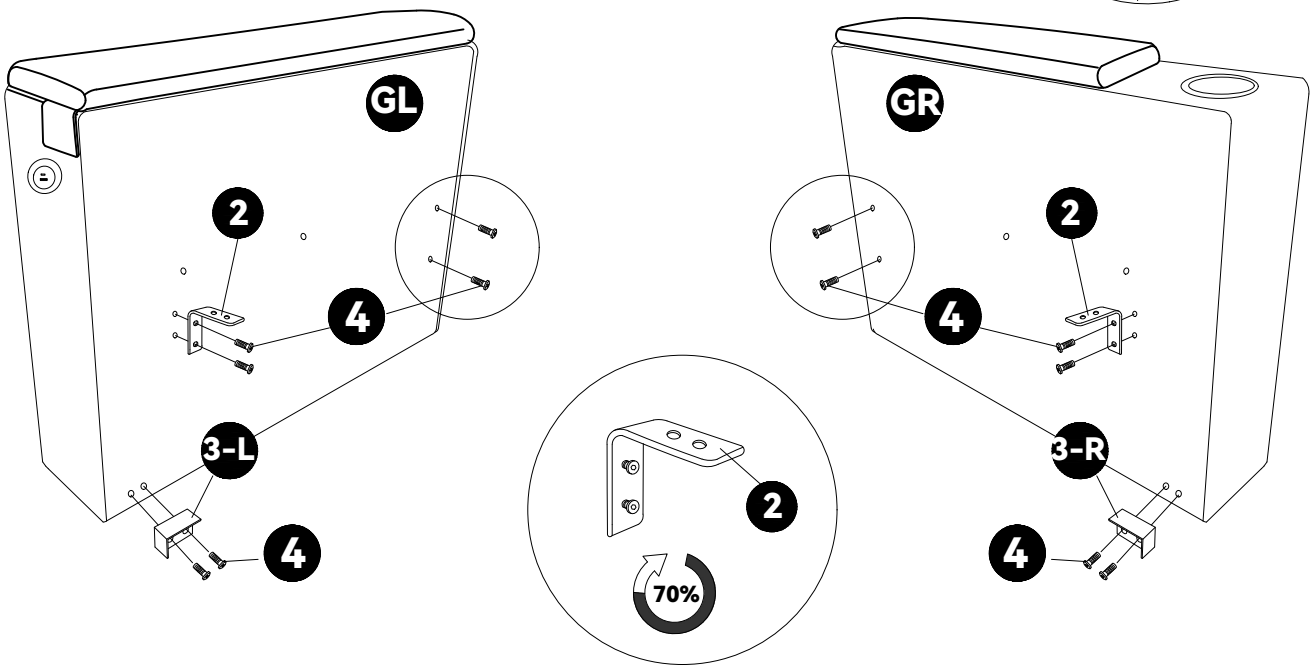

4

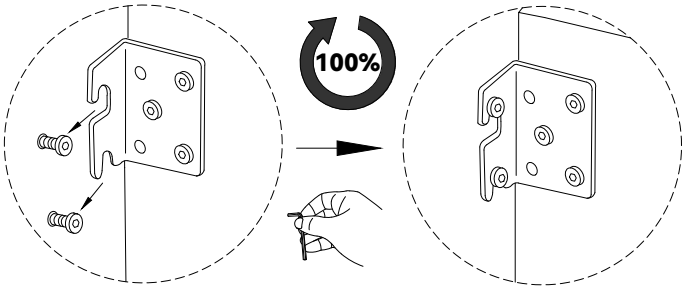

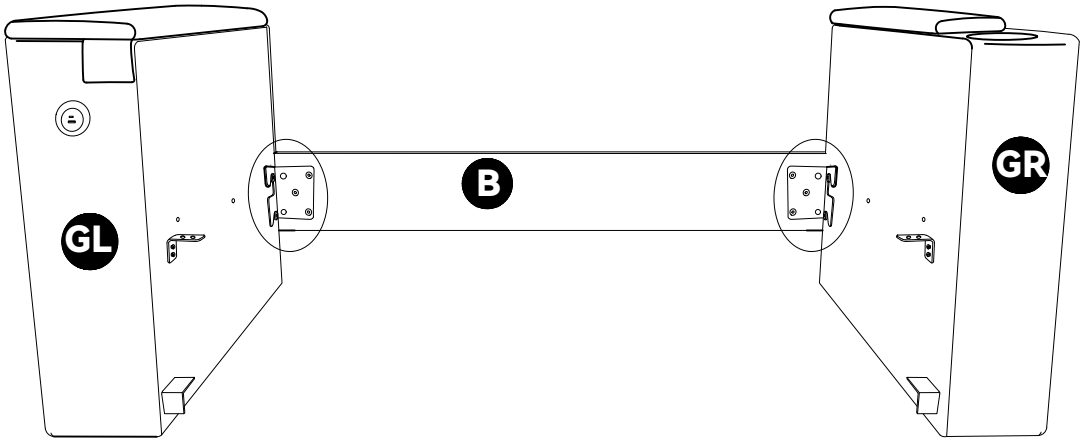

5

M6×80MM
6 ×4

M6*3
7 ×4

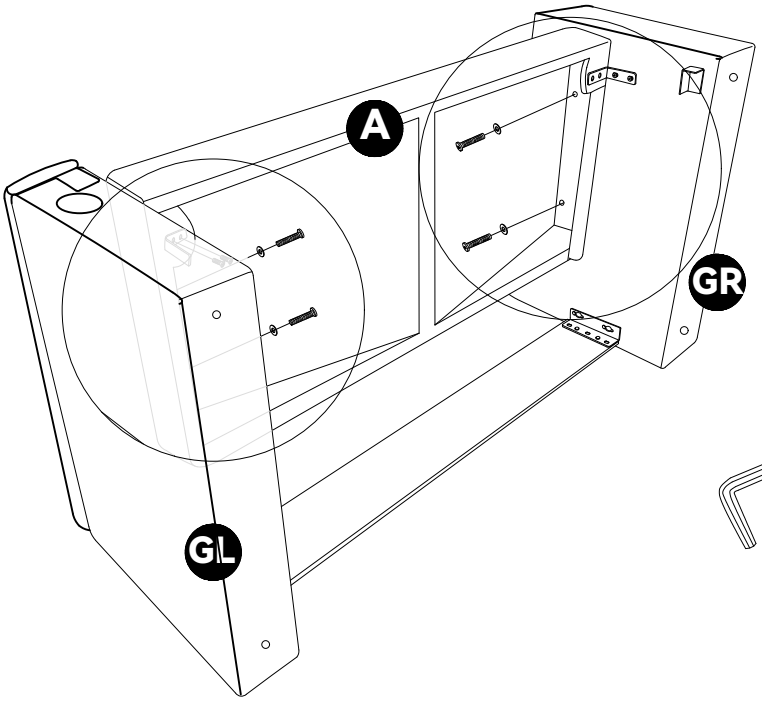

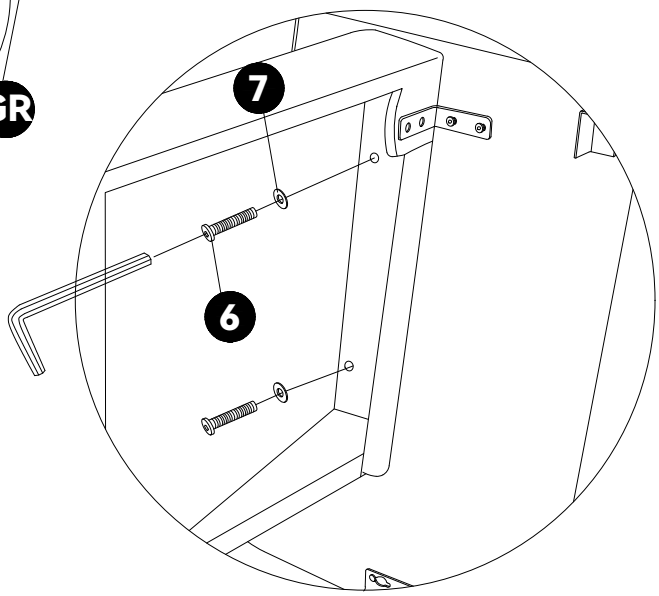

6

M6×15MM	5CM	
4×4	Z×4	Y×4

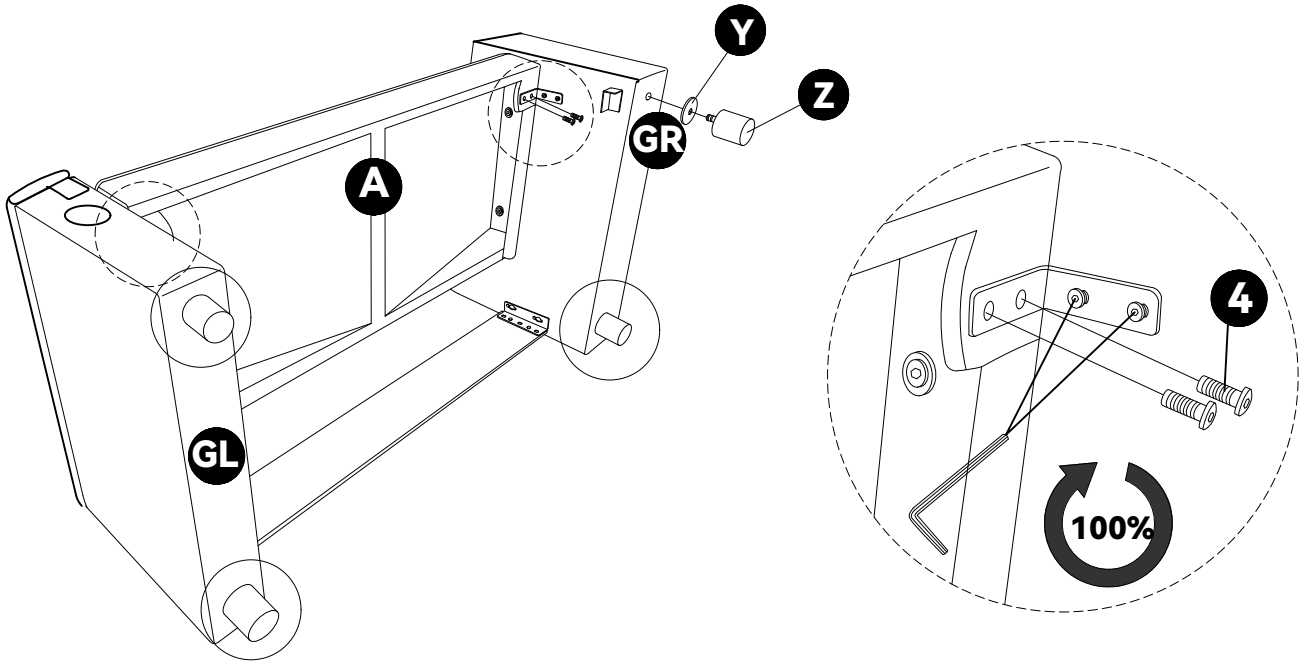

7

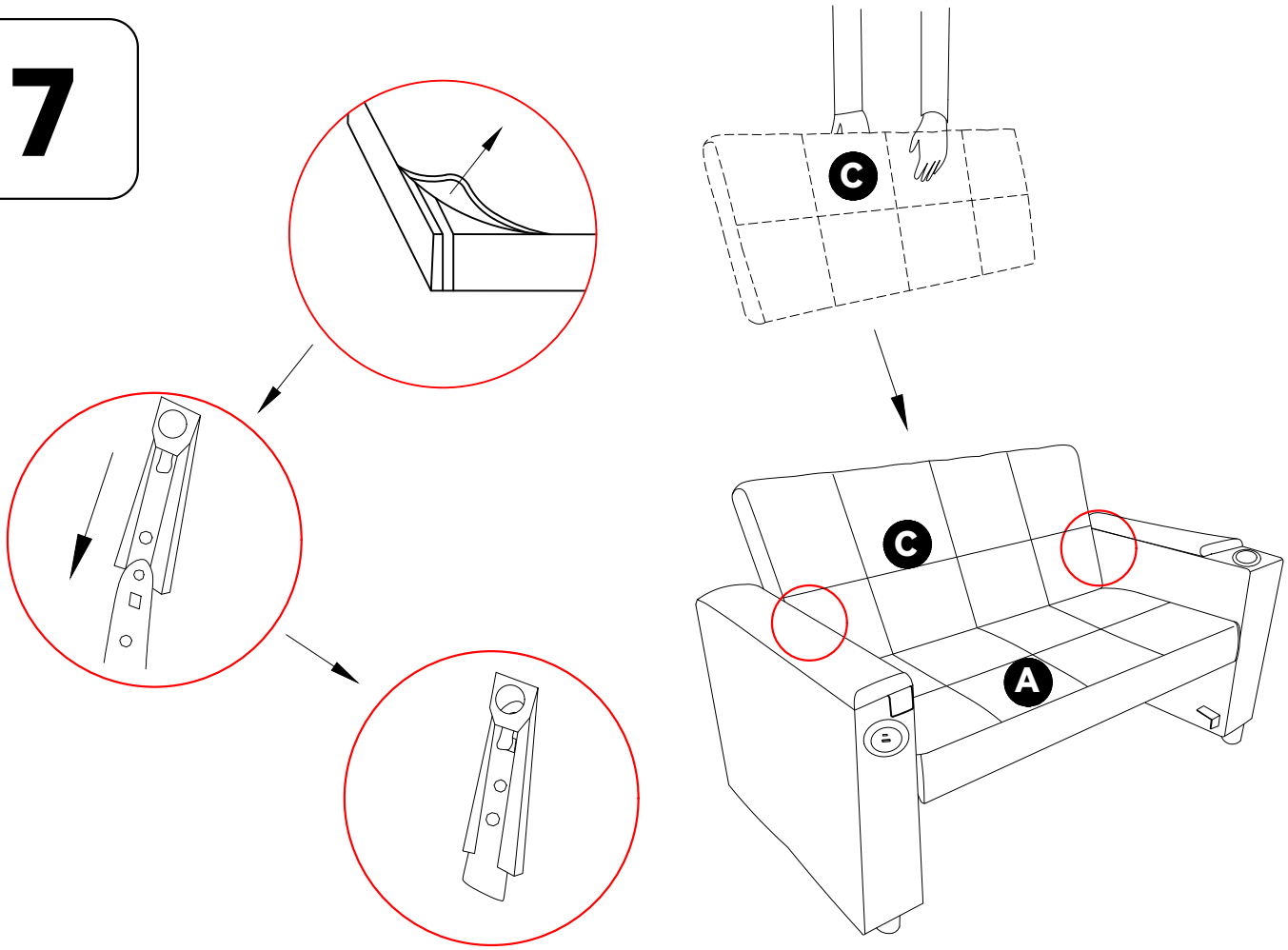

8

2 ×2

M6×15MM
4 ×4

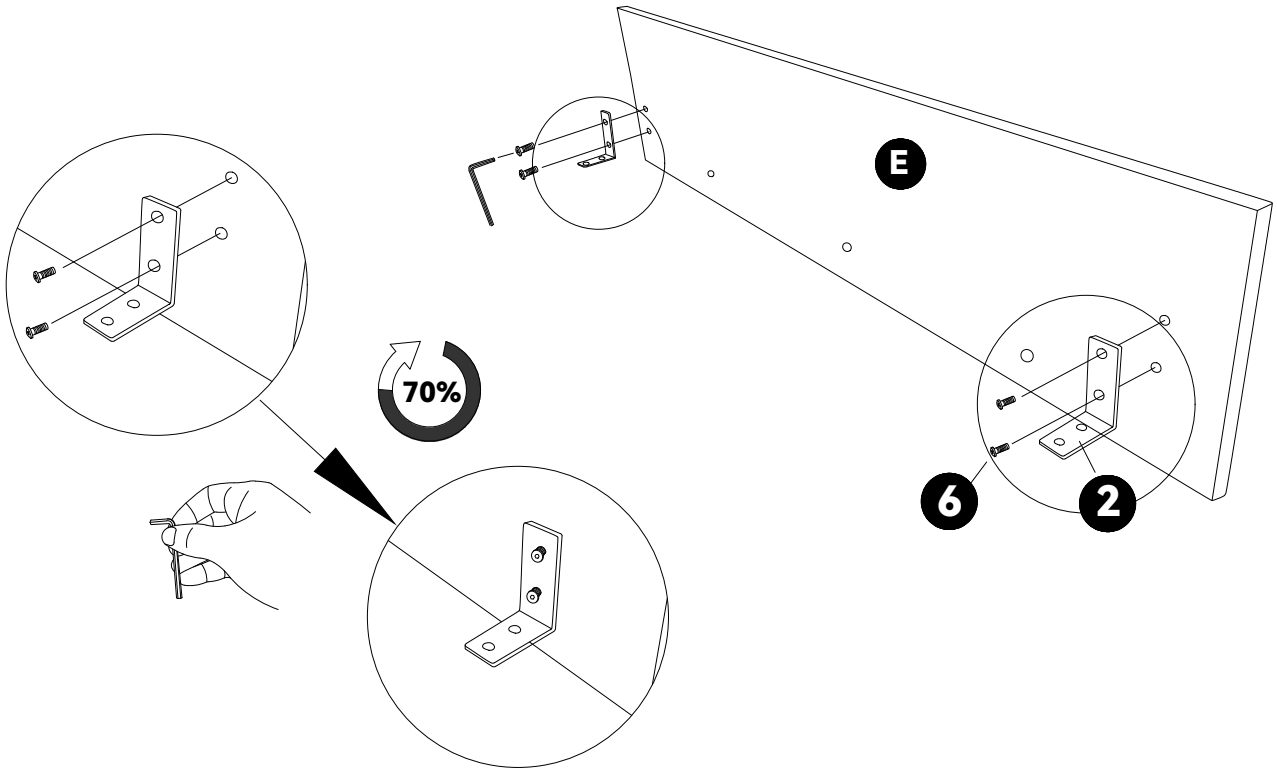

9

M6×30MM
5 ×3

8 ×6

M5×15MM
9 ×24

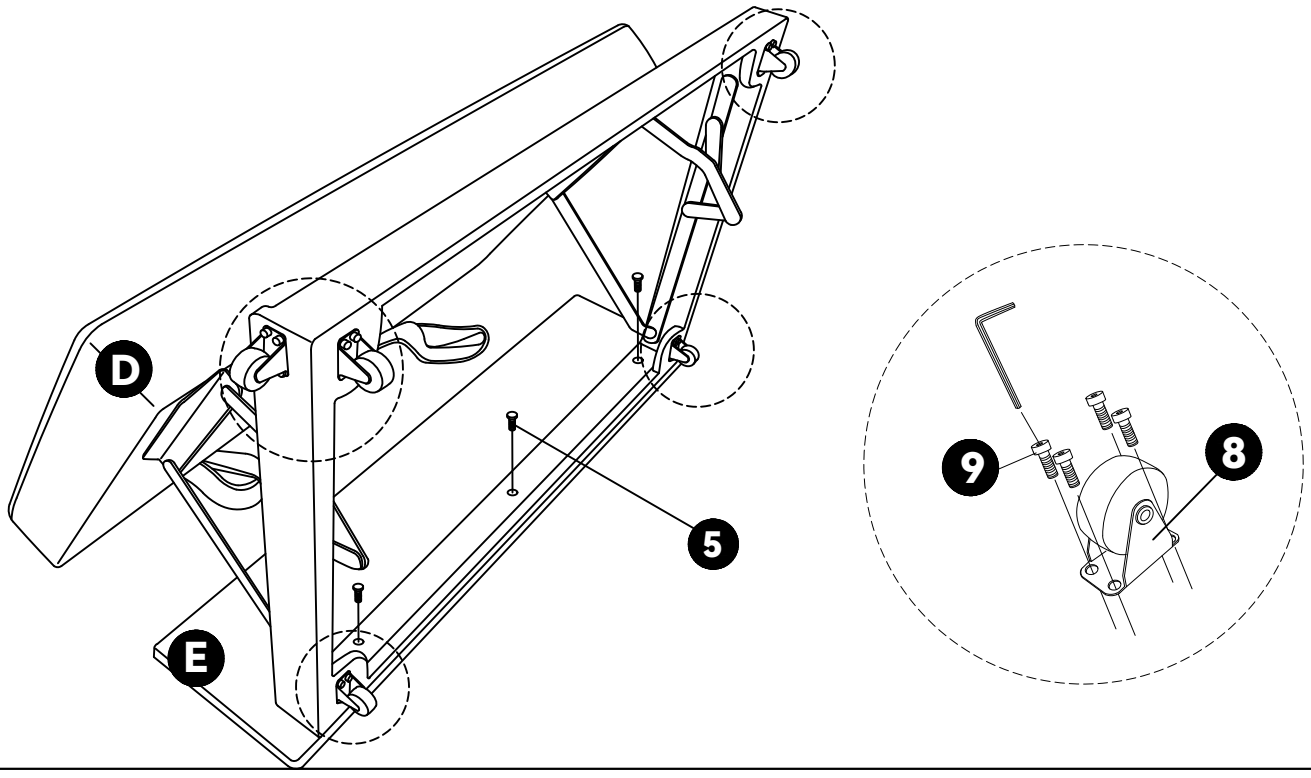

10



M6×15MM

4 ×4

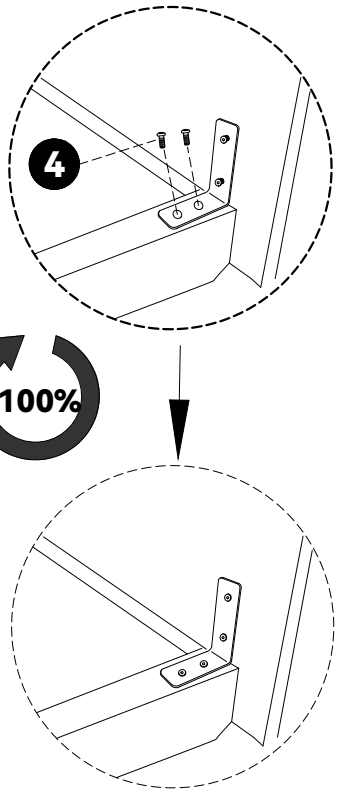

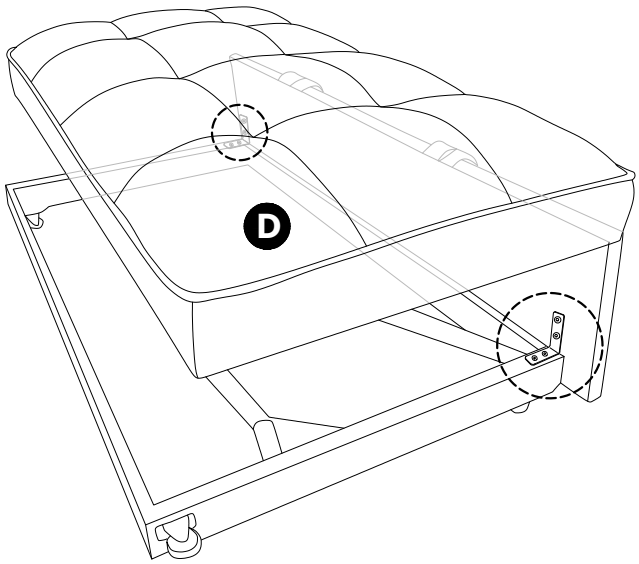

11



W ×1

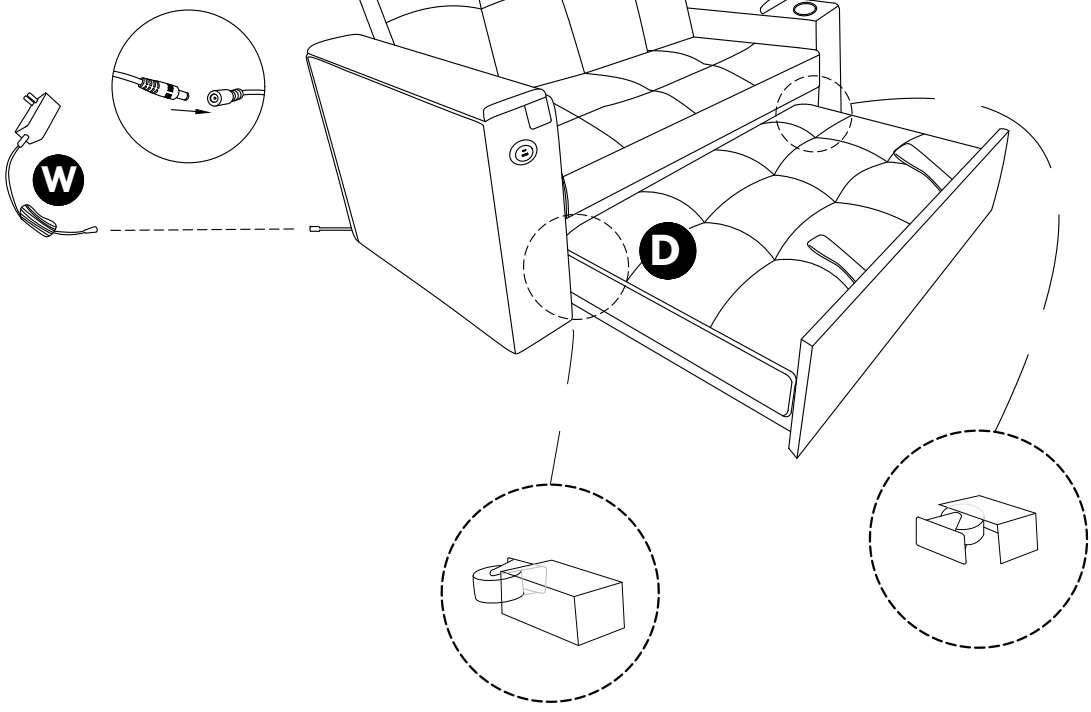

12

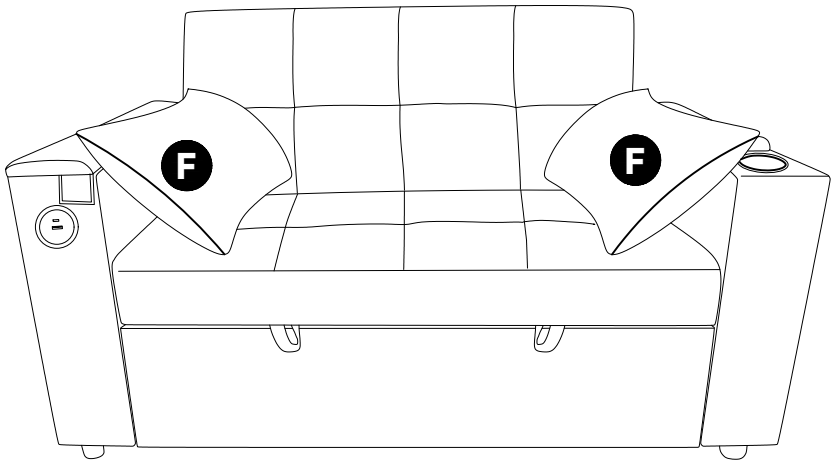

13

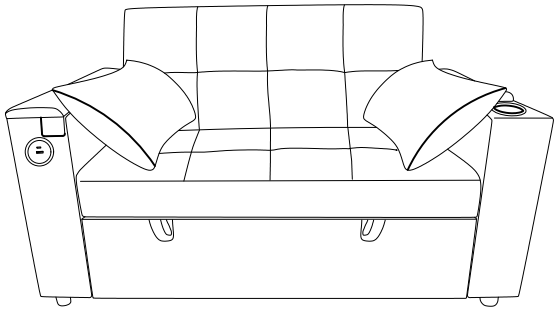

OR

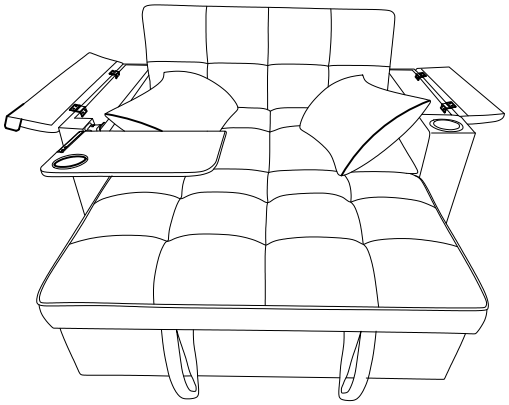

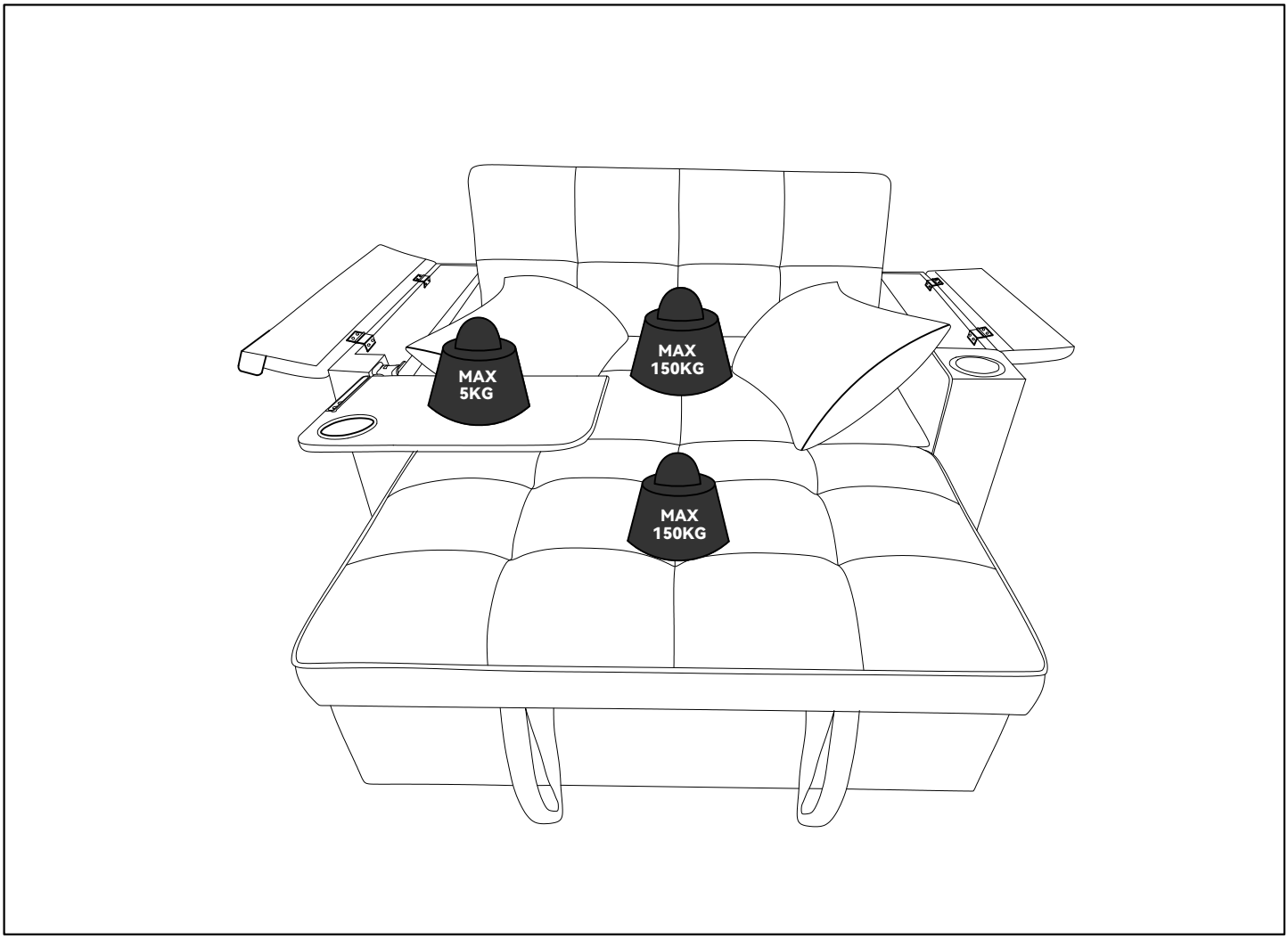

Importeur	Decobus Handel GmbH
Address	Unit C, Swift Point, Cosford Lane, Rugby, CV21 1PY, GB
Email/URL	harborcomhar@gmail.com
Hersteller	Shenzhen Yongchang Zhixing Electronics Co., Ltd.
Addresse	Room 401, Building 4, No.48 Zhangbei Road, Zhangbei Community. Longcheng Street,Longgang District, Shenzhen City, GuangDong, P.R China
Email/URL	sales@e-wealthy.com
Product identification	N605P540099/ N605P540100/ N605P540101
Made in	China
UK REP	COMHARBOR LIMITED Unit C, Swift Point, Cosford Lane, Rugby, CV21 1PY, GBharborcomhar@gmail.com

UKCA

Produkt: AC/DC ADAPTER
Modell：YCZX-0502000AB
Nennspannung: Input:100-240V,Output:5V
Nennfrequenz：50/60HZ
Leistung：10W

Importeur	Decobus Handel GmbH
Address	Unit C, Swift Point, Cosford Lane, Rugby, CV21 1PY, GB
Email/URL	harborcomhar@gmail.com
Hersteller	Foshan Xinwang intelligent Technology Co., LTD
Addresse	402 East 12, Liandong International Pioneer Park, Lecong Town, Shunde District, Foshan City, Guangdong Province
Email/URL	sales@e-wealthy.com
Product identification	N605P540099/ N605P540100/ N605P540101
Made in	China
UK REP	COMHARBOR LIMITED Unit C, Swift Point, Cosford Lane, Rugby, CV21 1PY, GBharborcomhar@gmail.com

UKCA

Produkt: Embedded USB
Modell：XW-UT40/45
Nennspannung: Input:100-240Vdc,Output:5V
Nennfrequenz: 50/60HZ
Leistung: 10W

CERTIFICATE OF CONFORMITY

Certificate No. : BKC26042022DC

Certificate of Conformity

Applicant	:	**Foshan Xinwang intelligent Technology Co., LTD** 5th Foor, B04 Freight Elevator, Building B, Blue Fat Man, Chuangxing 1st Road, Lecong Town,Shunde District, Foshan City, Guangdong Province
Manufacturer	:	**Foshan Xinwang intelligent Technology Co., LTD** 5th Foor, B04 Freight Elevator, Building B, Blue Fat Man, Chuangxing 1st Road, Lecong Town,Shunde District, Foshan City, Guangdong Province
Trademark	:	**Dianpudun**
Product	:	**Embedded USB**
Model(s)	:	**XW-UT40/45**
Test Standard	:	**BS EN 55032:2015+A11:2020+A1:2020** **BS EN IEC 61000-3-2:2019+A1:2021+A2:2024** **BS EN 61000-3-3:2013+A1:2019+A2:2021** **BS EN 55035:2017+A11:2020**

The certificate of conformity is based on an evaluation of a sample of the above mentioned products. It does not imply an assessment of the whole production. It is possible to use UKCA marking to demonstrate the compliance with the council Electromagnetic Compatibility Regulations 2016(S.I. 2016 No. 1091). It is only valid in connection with the test report number: BKC26042022DE.

UKCA

SHENZHEN BKC TESTING CO., LTD. APPROVED

Manager

Apr. 29, 2026

Shenzhen BKC Testing Co., Ltd.
Room103, 1/F, Huaya Building, Huaya Industrial Park, Yousong Community, Longhua Subdistrict, Longhua District, Shenzhen, Guangdong, China
Tel: 4000-875-382 0755-84829082 E-mail: bkc@bkc-lab.com
Certificate Search: http://www.bkc-lab.com

CERTIFICATE OF CONFORMITY

Certificate No. : BKC26042023DC

Certificate of Conformity

Applicant : **Foshan Xinwang intelligent Technology Co., LTD**
5th Foor, B04 Freight Elevator,Building B, Blue Fat Man, Chuangxing 1st Road, Lecong Town, Shunde District, Foshan City, Guangdong Province

Manufacturer : **Foshan Xinwang intelligent Technology Co., LTD**
5th Foor, B04 Freight Elevator,Building B, Blue Fat Man, Chuangxing 1st Road, Lecong Town, Shunde District, Foshan City, Guangdong Province

Trademark : **Dianpudun**

Product : **Embedded USB**

Model(s) : **XW-UT40/45**

Test Standard : **BS EN IEC 62368-1:2024+A11:2024**

The certificate of conformity is based on an evaluation of a sample of the above mentioned products. It does not imply an assessment of the whole production. It is possible to use CE marking to demonstrate the compliance with this LVD Directive 2014/35/EU. It is only valid in connection with the test report number: BKC26042023DS.

UK CA

SHENZHEN BKC TESTING CO.,LTD. BKC APPROVED

Manager

Apr. 29, 2026

Shenzhen BKC Testing Co., Ltd.
Room103, 1/F, Huaya Building, Huaya Industrial Park, Yousong Community, Longhua Subdistrict, Longhua District, Shenzhen, Guangdong, China
Tel: 4000-875-382 0755-84829082 E-mail: bkc@bkc-lab.com
Certificate Search: http://www.bkc-lab.com

CERTIFICATE OF CONFORMITY

Certificate No. : BKC26042024DC

Certificate of Conformity

Applicant	:	**Shanghai Jiayun Industry Co.,Ltd.** 5th Foor, B04 Freight Elevator, Building B, Blue Fat Man, Chuangxing 1st Road, Lecong Town, Shunde District, Foshan City, Guangdong Province
Manufacturer	:	**Shanghai Jiayun Industry Co.,Ltd.** 5th Foor, B04 Freight Elevator, Building B, Blue Fat Man, Chuangxing 1st Road, Lecong Town, Shunde District, Foshan City, Guangdong Province
Trademark	:	**Dianpudun**
Product	:	**Embedded USB**
Model(s)	:	**XW-UT40/45**
Test Standard	:	**IEC 62321-3-1:2013** **IEC 62321-4:2013+A1:2017** **IEC 62321-5:2013** **IEC 62321-6:2015** **IEC 62321-7-1:2015** **IEC 62321-7-2:2017** **IEC 62321-8:2017**

The product described above has been tested by us and found in compliance with the council RoHS 2.0 Directive 2011/65/EU Annex II (EU) 2015/863 as last amended by Directive (EU) 2017/2102.It is only valid in connection with the test report number: BKC26042024DR.

RoHS

SHENZHEN BKC TESTING CO.,LTD. BKC APPROVED

Manager

Apr. 29, 2026

Shenzhen BKC Testing Co., Ltd.
Room103, 1/F, Huaya Building, Huaya Industrial Park, Yousong Community, Longhua Subdistrict, Longhua District, Shenzhen, Guangdong, China
Tel: 4000-875-382 0755-84829082 E-mail: bkc@bkc-lab.com
Certificate Search: http://www.bkc-lab.com

DECLARATION OF CONFORMITY (No 0001)

1. Product model/product:

AC/DC ADAPTER

2. Name and address of the manufacturer or his authorised representative:

Name: ShenZhen YongChang Zhixing Electronice Co,Ltd

Address: Room 401, Building 4, No.48 Zhangbei Road, Zhangbei Community, Longcheng Street, Longgang District, Shenzhen City

3. This declaration of conformity is issued under the sole responsibility of the manufacturer.

4. Object of the declaration:

AC/DC ADAPTER

YCZX-0502000AB

Input: 100-240 V

Output: 5V



5. The object of the declaration described above is in conformity with the relevant Union harmonisation legislation:

UKCA:

Electrical Equipment (Safety) Regulations 2016 (SI 2016 No. 1101);

Electromagnetic Compatibility Regulations 2016 (SI 2016 No. 1091);

Restriction of the Use of Certain Hazardous Substances in Electrical and Electronic Equipment Regulations 2019. SI 2012/3032 & SI 2023/658

6. References to the relevant harmonised standards used or references to the other technical specifications in relation to which conformity is declared:

UKCA:

BS EN 62368-1:2014+A11:2017

BS EN 55032: 2015+A11: 2020BS EN IEC 61000-3-2: 2019+A1:2021BS EN 61000-3-3:2013+A2:2021BS EN 55035: 2017+A11:2020

IEC 62321-4:2013+A1:2017 &IEC 62321-5:2013 & IEC 62321-7-1:2015& IEC 62321-7-2:2017

IEC 62321-3-1:2013,

IEC 62321-6:2015

7. Additional information: Risk of electric shock. Do not open. For indoor use only.

Signed for and on behalf of: ShenZhen YongChang Zhixing Electronice Co,Ltd

(place and date of issue): Shenzhen, China 2024

(name, function) (signature): QI GANG ZOU