ASSEMBLY INSTRUCTION

SKU CODE : RH00114
FULL SIZE HOUSE BUNK BED

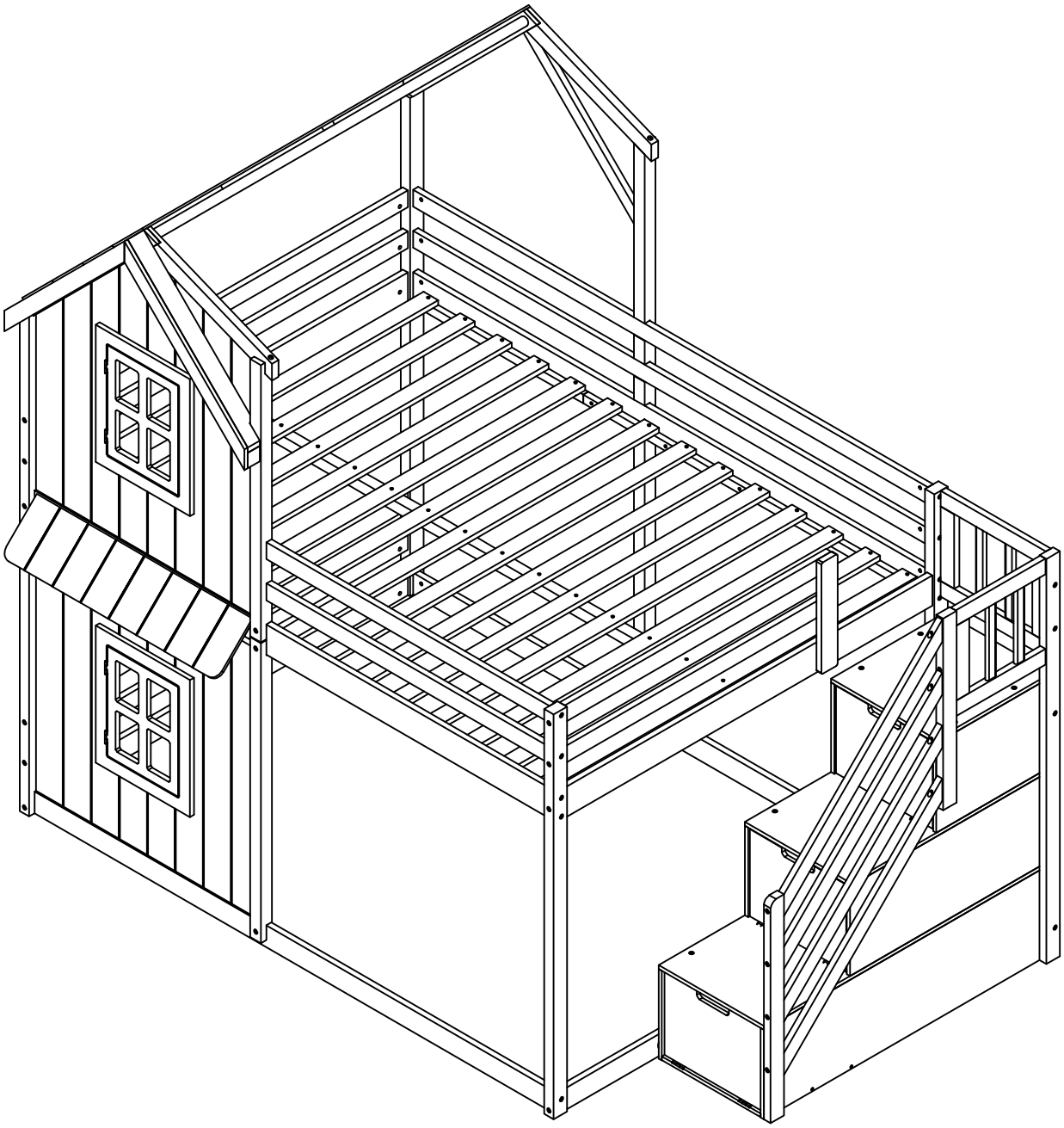

SAFETY WARNINGS

1. This bed is designed for use only mattress(es) meeting the following specifications on the upper bunk:

Upper bed

Bed Type	**Length**	**Width**	**Thickness**
Full Standard	***74"-75"***	**53 1/2"- 54"**	**6" max**

2. Replacement parts, including additional guardrails, maybe obtained from any of our (ANH THUAN PHAT IMPORT-EXPORT COMPANY LIMITED) dealers.
3. Follow the information on the warnings appearing on the upper bunk bed end structure and on the carton. Do not remove warning label from bed.
4. Always use the recommended size mattresses or mattress supports, or both, to help prevent the likelihood of entrapment or falls.
5. Surface of the mattress must be at least 5". (127 mm) below the upper edge of guardrails.
6. Do not allow children under 6 years of age to use the upper bunk.
7. Periodically check and ensure that the guardrail, ladder, and other components are in their proper position, free from damage, and that all connectors are tight.
8. Do not allow horseplay on or under the bed and prohibit jumping on the bed
9. Always use the ladder for entering and leaving the upper bunk.
10. Do not use substitute parts. Contact the manufacturer or dealer for replacement parts.
11. Use of a night light may provided added safety precaution for a child using the upper bunk.
12. Always use guardrails on both long sides of the upper bunk. If the bunk bed will be placed next to the wall, the guardrail that runs the full length of the bed should be placed against the wall to prevent entrapment between the bed and wall.
13. The use of water or sleep flotation mattresses is prohibited.
14. STRANGULATION HAZARD - Never attach or hang items to any part of the bunk bed that are not designed for use with the bed; for example, but not limited to, hook, belts and jump ropes.
15. Keep these instructions for future reference
16. Prohibit more than one person on upper bunk.
17. We recommend assembling your bunk bed on the shipping carton to protect your floor or carpet.
18. Be certain all staples are out of the box before beginning assembly on the shipping carton.

SAFETY WARNINGS

1.At the beginning :
Tighten all hardware.
Check metal parts for rust. If found, sand and repaint using a non-lead-based paint meeting the requirements of 16 CFR 1303.
Check all wood members for deterioration and splinters. Sand down splinters and replace deteriorating wood members.
Rake and check depth of loose fill protective surfacing materials to prevent compaction and to maintain appropriate depth. Replace as necessary.

2. Twice a month
Tighten all hardware.
Rake and check depth of loose fill protective surfacing materials to prevent compaction and to maintain appropriate depth. Replace as necessary.
3. Owners shall be responsible for maintaining the legibility of the warning labels.
4. Disposal Instructions-
There shall be instructions advising the owner to disassemble and dispose of the playground equipment in such a way that no unreasonable hazards will exist at the time the playground equipment is discarded.
5. The instructions shall also include the information found in Section 4 of the United States Consumer Product Safety Commission's (USCPSC) Outdoor Home Playground Safety Handbook or specific surfacing guidelines for the product consistent with the USCPSC Handbook. A copy of this section may be found in Appendix X2.
6. Observing the following statements and warnings reduces the likelihood of serious or fatal injury.
7. Specifying the number and weight of occupants that may safely use the equipment singly or simultaneously,
8. Recommending on-site adult supervision for children of all ages,
9. Warning the owner to instruct children not to use the equipment in a manner other than intended,
10. Warning the owner to instruct children not to get off equipment while it is in motion,
11. Warning the owner not to allow children to wear inappropriate items, such as but not limited to, loose fitting clothing, hood and neck drawstrings, scarves, cord-connected items, capes and ponchos. These items can cause death by strangulation.
12. Warning the owner to instruct children not to climb when the equipment is wet.
13. Warning the owner to instruct children not to attach items to the playground equipment that are not specifically designed for use with the equipment, such as, but not limited to, jump ropes, clothesline, pet leashes, cables and chain as they may cause a strangulation hazard
14. Warning the owner to instruct children to remove their bike or other sports helmet before playing on the playground equipment.
15. Warning the owner to dress children with well-fitting and full foot enclosing footwear. Examples of inappropriate footwear are clogs, flip flops, and sandals.
16. Place the equipment on level ground, not less than 6 ft (1.8 m) from any structure or obstruction such as a fence, garage, house, overhanging branches, laundry lines, or electrical wires
17. Do not install home playground equipment over concrete, asphalt, packed earth, grass, carpet, or any other hard surface. A fall onto a hard surface can result in serious injury or death to the equipment user
18. To prevent serious injury, cautionary statements shall be included which warn that children must not use the equipment until properly installed.

ASSEMBLY INSTRUCTION

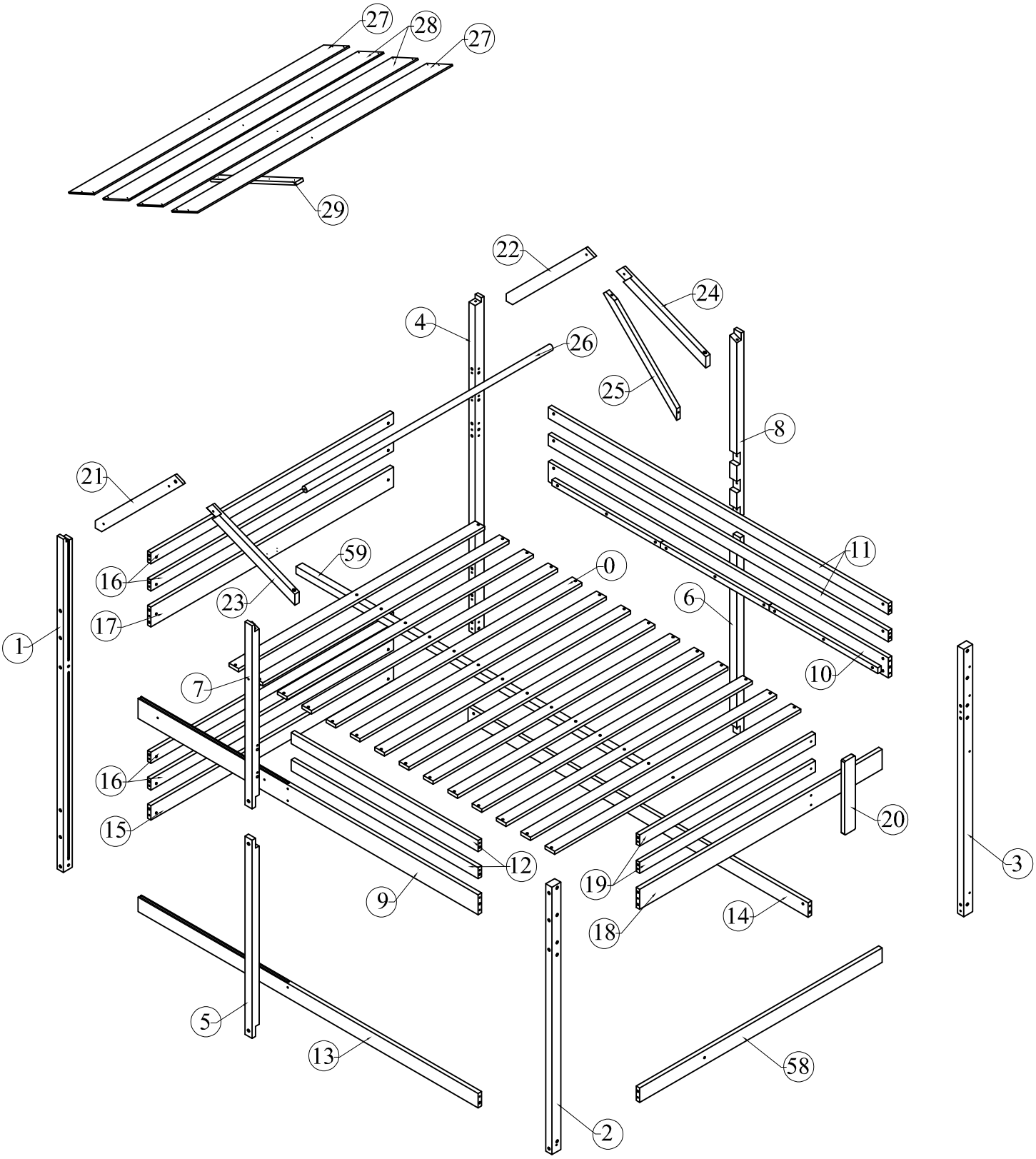

ASSEMBLY INSTRUCTION

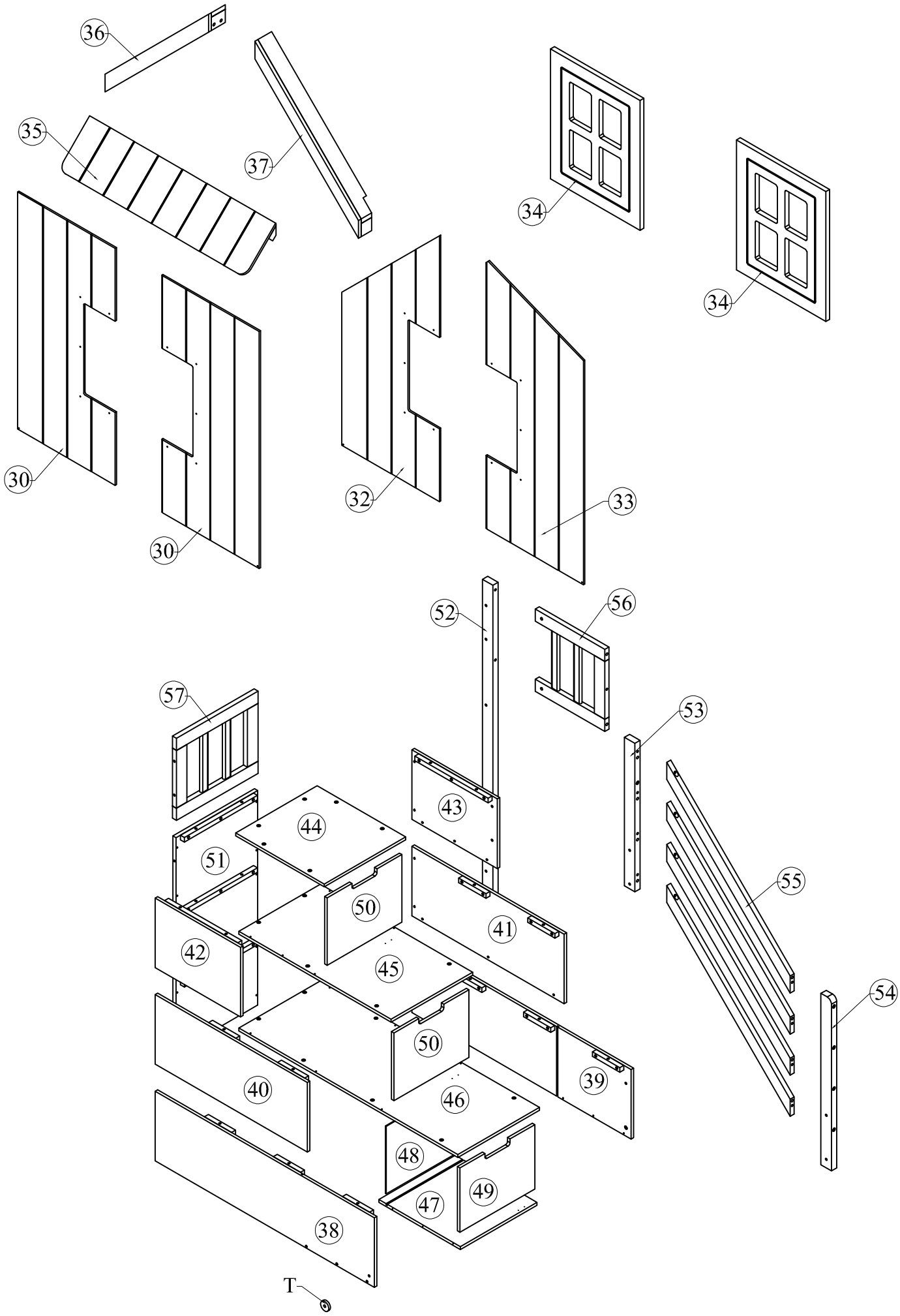

Part List (Box 1 - RH00114-1)

1 x 1 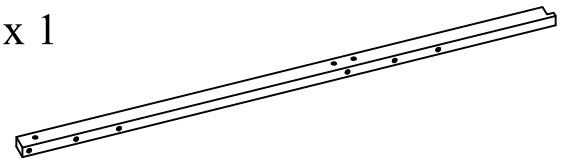 Leg	2 x 1 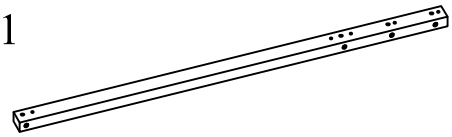 Leg
3 x 1 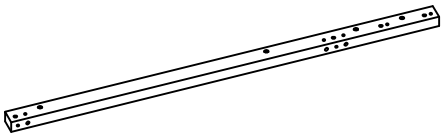 Leg	4 x 1 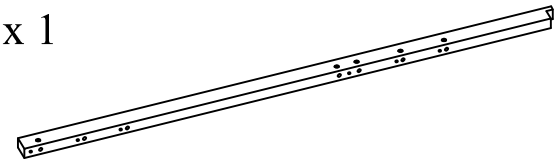 Leg
5 x 1 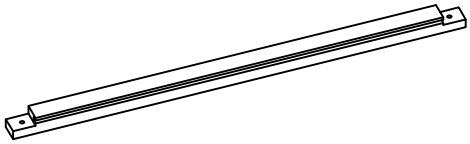 Upright	6 x 1 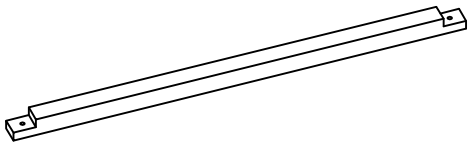 Upright
7 x 1 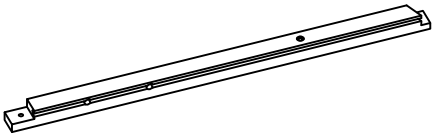 Upright	8 x 1 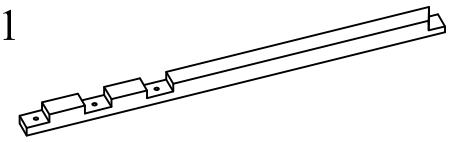 Upright
9 x 1 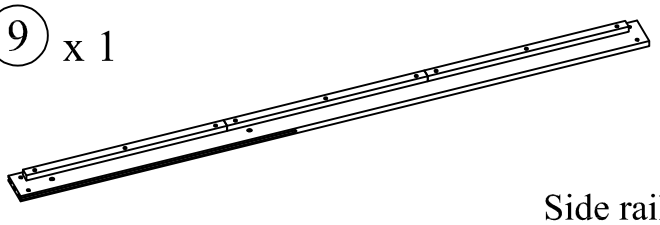 Side rail	10 x 1 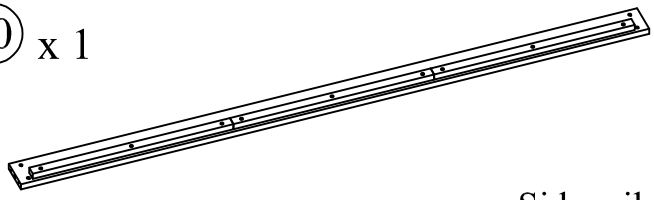 Side rail
11 x 2 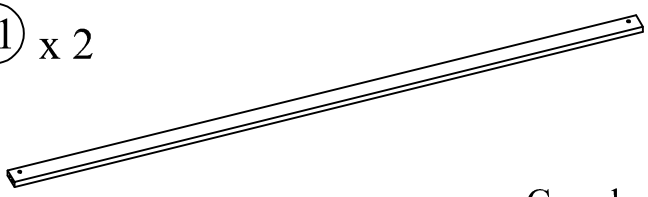 Crossbar	12 x 2 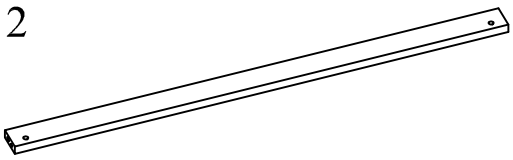 Crossbar
13 x 1 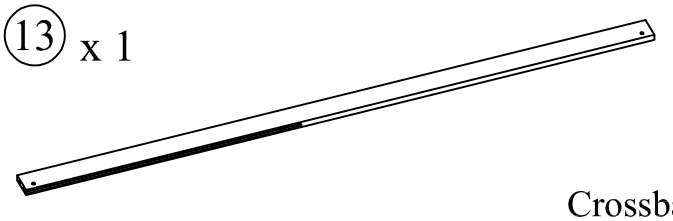 Crossbar	14 x 1 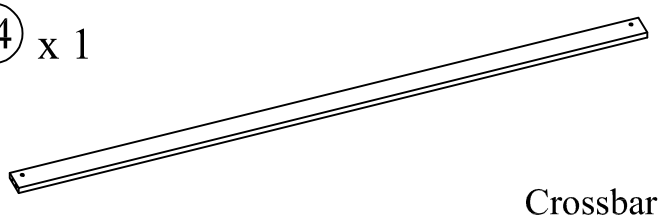 Crossbar
27 x 2 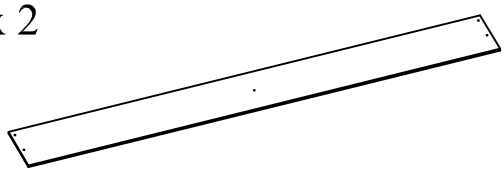 Panel	28 x 2 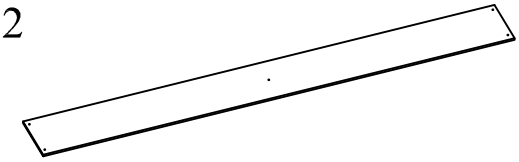 Panel

Part List (Box 1 - RH00114-1)

52 x 1 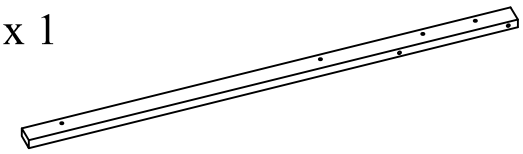 Upright	53 x 1 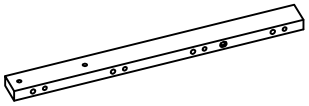 Upright
54 x 1 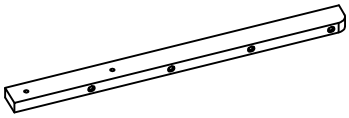 Upright	59 x 1 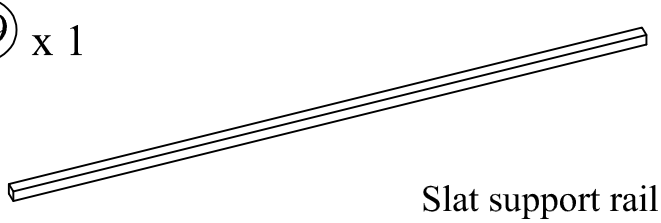 Slat support rail

Part List (Box 2 - RH00114-2)

0 x 14 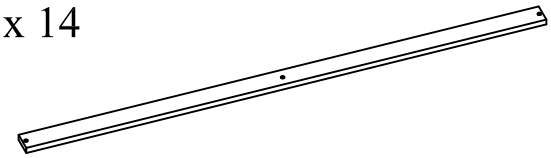 Slats	15 x 1 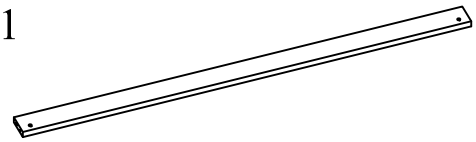 Crossbar
16 x 4 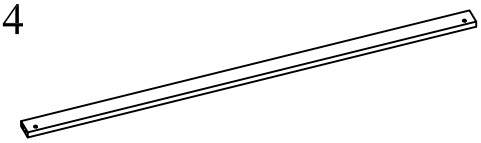 Crossbar	17 x 1 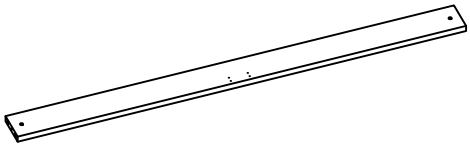 Crossbar
18 x 1 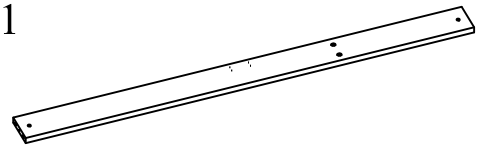 Crossbar	19 x 2 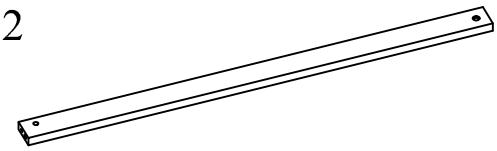 Crossbar
21 x 1  Roof brace	22 x 1 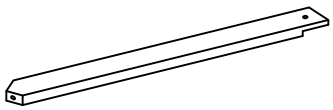 Roof brace
23 x 1  Roof brace	24 x 1 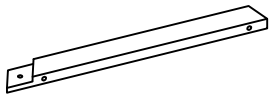 Roof brace
26 x 1 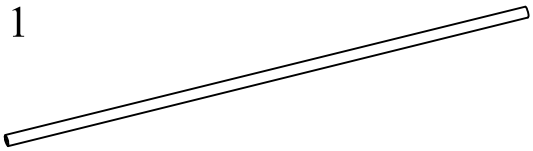 Round bar	35 x 1 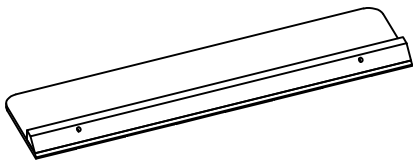 Decorative roof
36 x 1 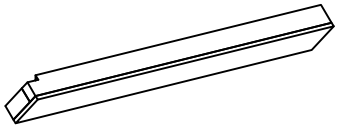 Decorative diagonal brace	37 x 1 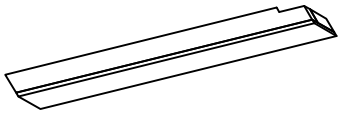 Decorative diagonal brace
38 x 1 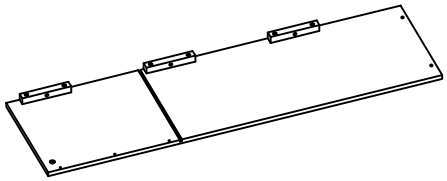 Stair side panel	39 x 1 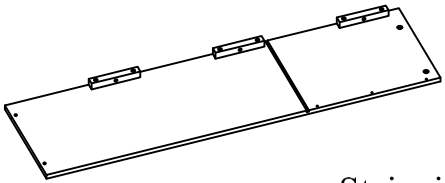 Stair side panel

Part List (Box 2 - RH00114-2)

40 x 1 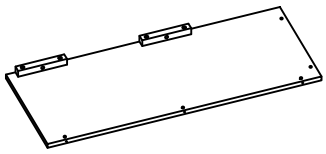 Stair side panel	41 x 1 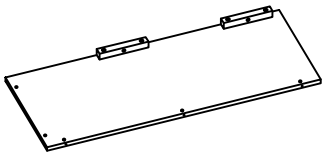 Stair side panel
42 x 1 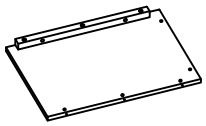 Stair side panel	43 x 1 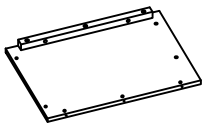 Stair side panel
58 x 1 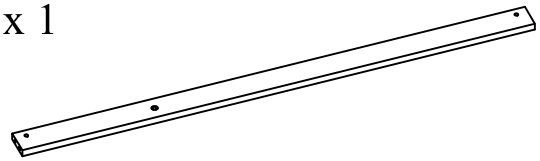 Crossbar	

Part List & Hardware List (Box 3 - RH00114-3)

20 x 1 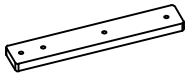 Vertical connector	25 x 1  Brace
29 x 1 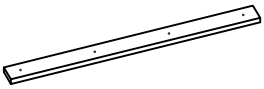 Crossbar	30 x 2 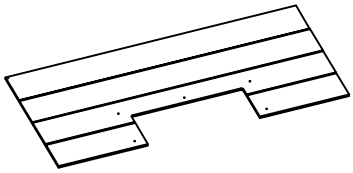 Panel
32 x 1 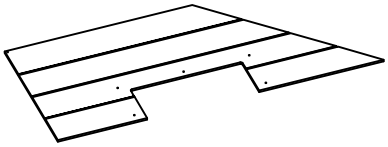 Panel	33 x 1 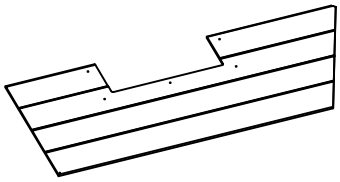 Panel
34 x 2 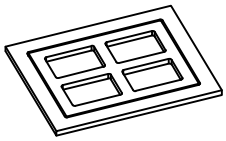 Window frame	44 x 1 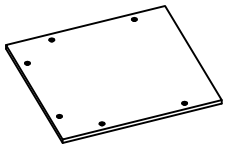 Panel
45 x 1 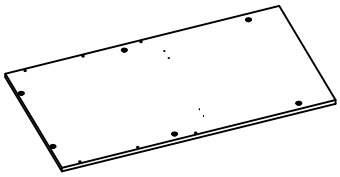 Panel	46 x 1 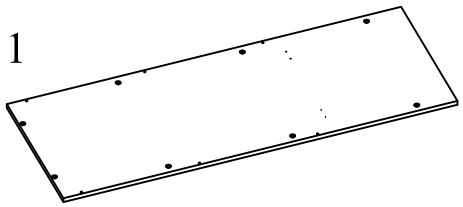 Panel
47 x 1 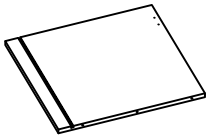 Panel	48 x 1 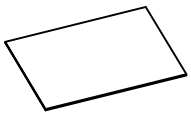 Panel
49 x 1 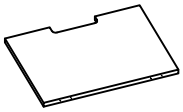 Door	50 x 2 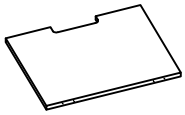 Door	51 x 1 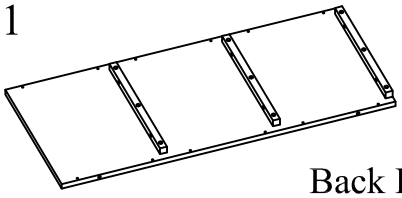 Back Panel
55 x 4 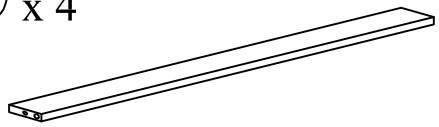 Stair baluster	56 x 1 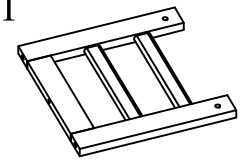 Frame	57 x 1 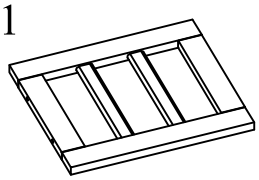 Frame

Hardware List (Box 3 - RH00114-3)

No.	OUTLOOK	DESC	QTY
A	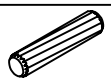	Dowel Ø10*40mm	50
B		Bolts 1/4"*25mm	28
C		Bolts 1/4"*30mm	11
D		Bolts 1/4"*40mm	12
E		Bolts 1/4"*50mm	03
F		Bolts 1/4"*60mm	05
G		Bolts 1/4"*70mm	08
H	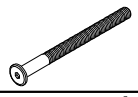	Bolts 1/4"*80mm	20
I	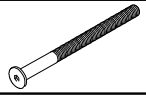	Bolts 1/4"*90mm	20
J		Cross dowel 1/4"*13mm	44
K		Hex bolts 1/4"*15mm	01
L		Round Head Screw #7*15mm	54
M		Screws #6*12mm	30
N		Screws #7*15mm	04
O		Screws #8*30mm	42
P		Screws #8*35mm	30
Q		Patt U	02
R	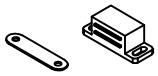	Door closer	03
S		Hinge	06
T		Wood pad	01

ASSEMBLY TOOLS REQUIRED (NOT INCLUDED)



Hardware List (Box 3 - RH00114-3)

No.	OUTLOOK	DESC	QTY
U		Patt L	01
V		Allen key 60*22*4mm	02

ASSEMBLY TOOLS REQUIRED (NOT INCLUDED)

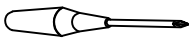

STEP 1

A		04
H	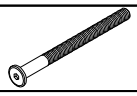	06
J		06

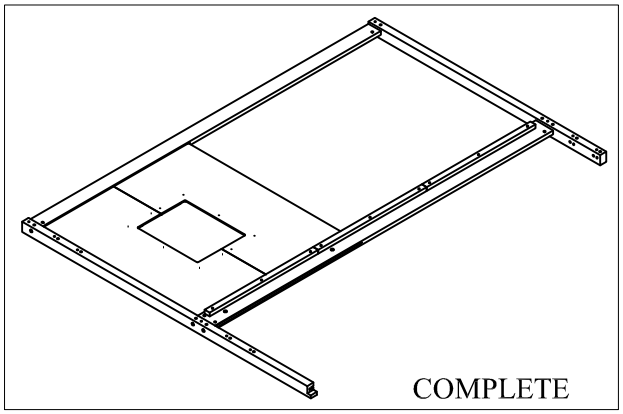

Place panels 30 and 31 into the pre-made grooves as shown.

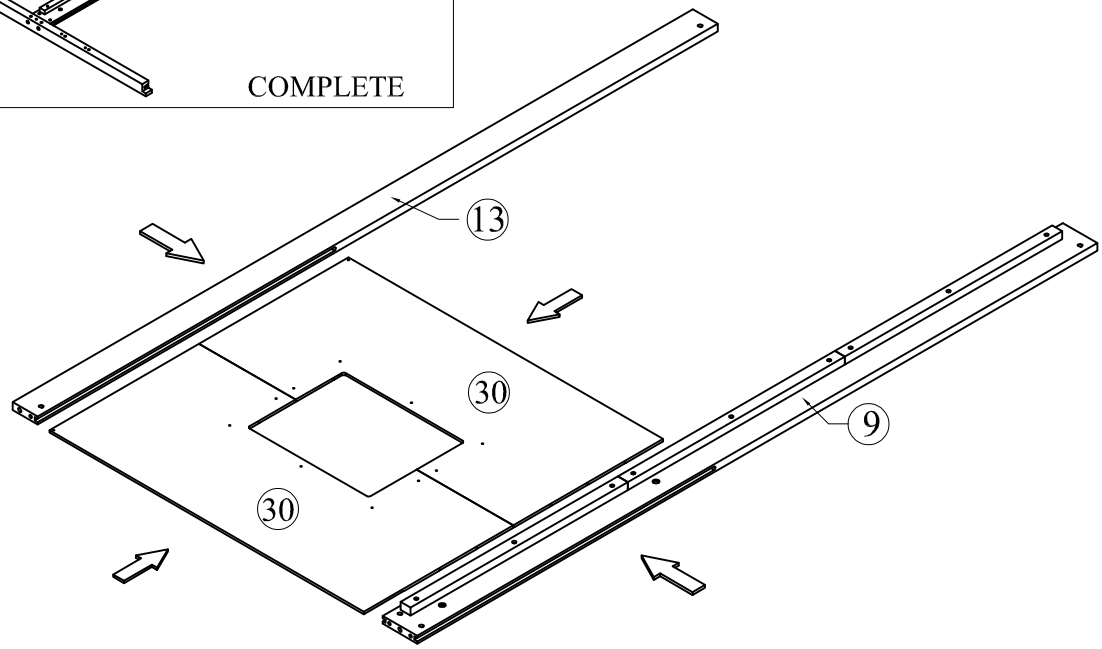

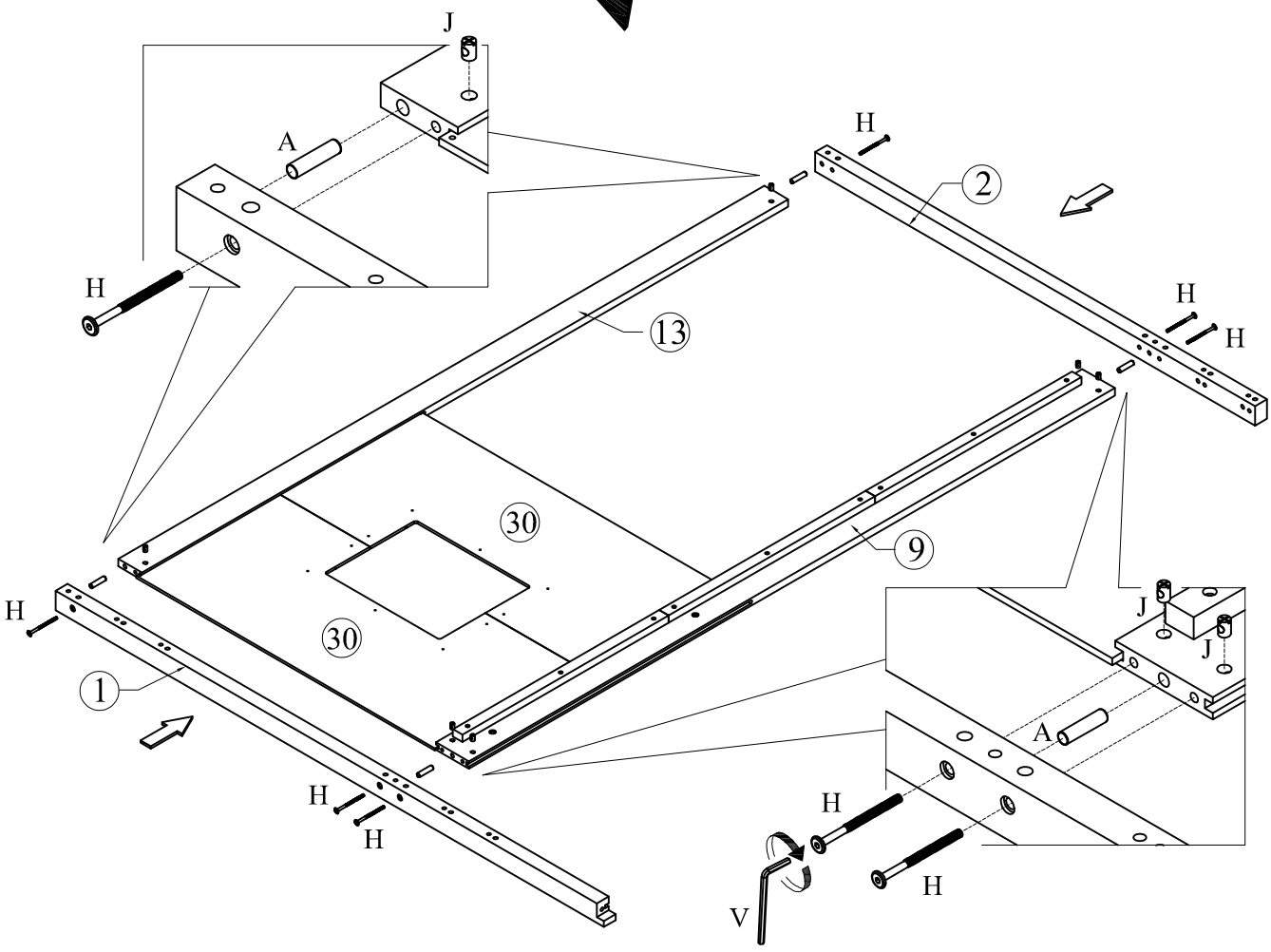

STEP 2

C		02

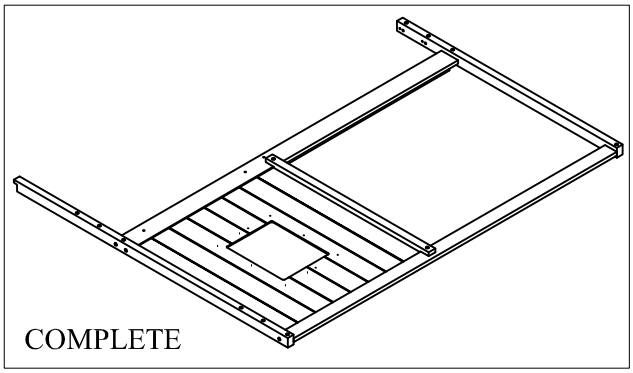

Turn over the parts assembled in Step 1 and continue as shown.

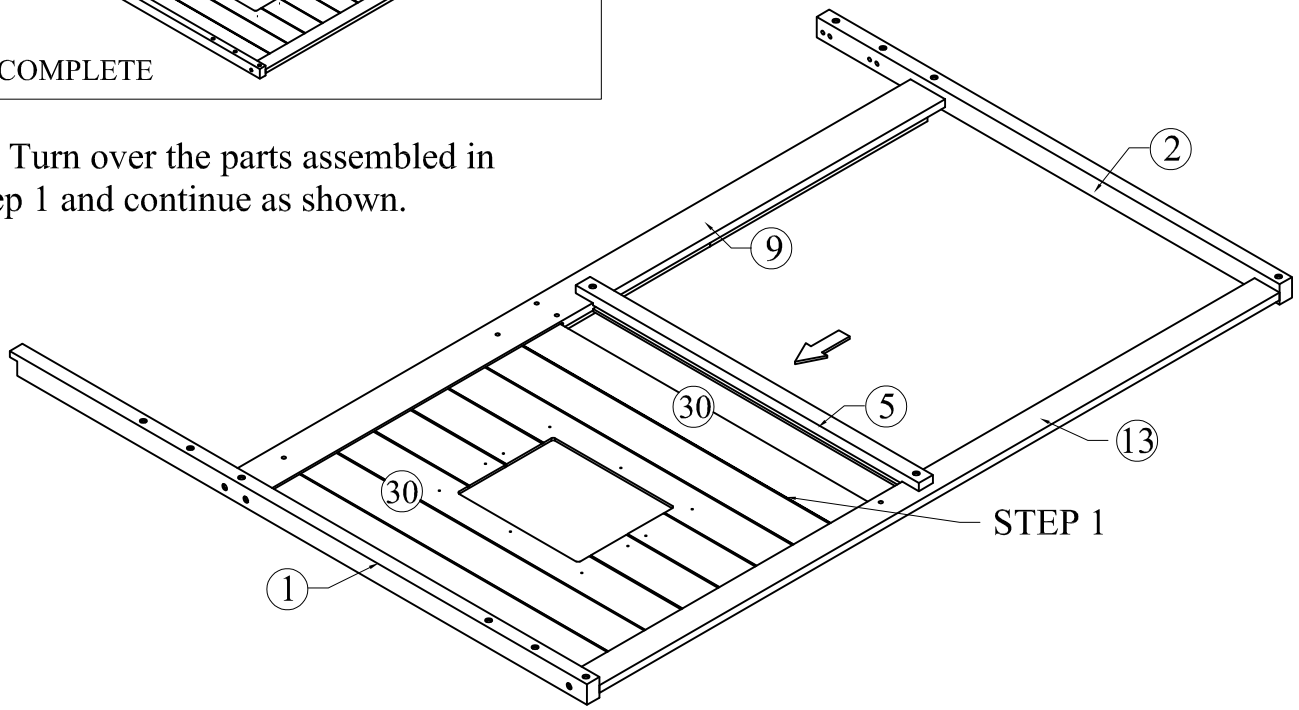

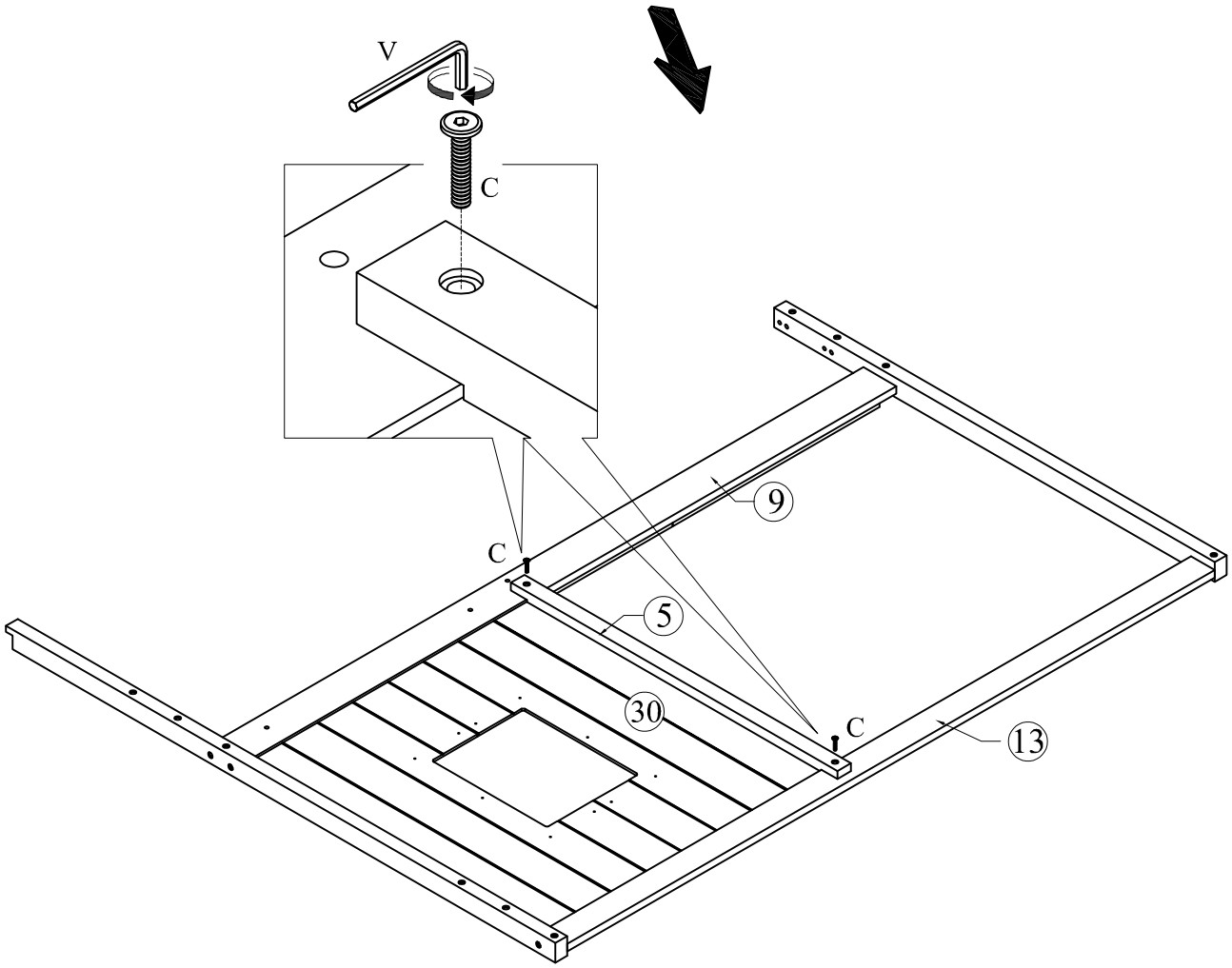

STEP 3

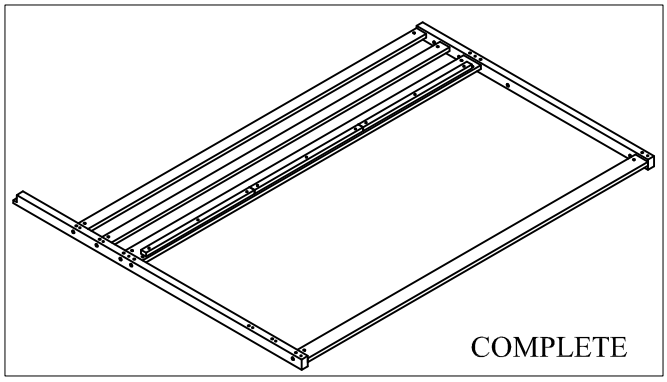

A		08
H	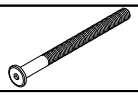	10
J		10

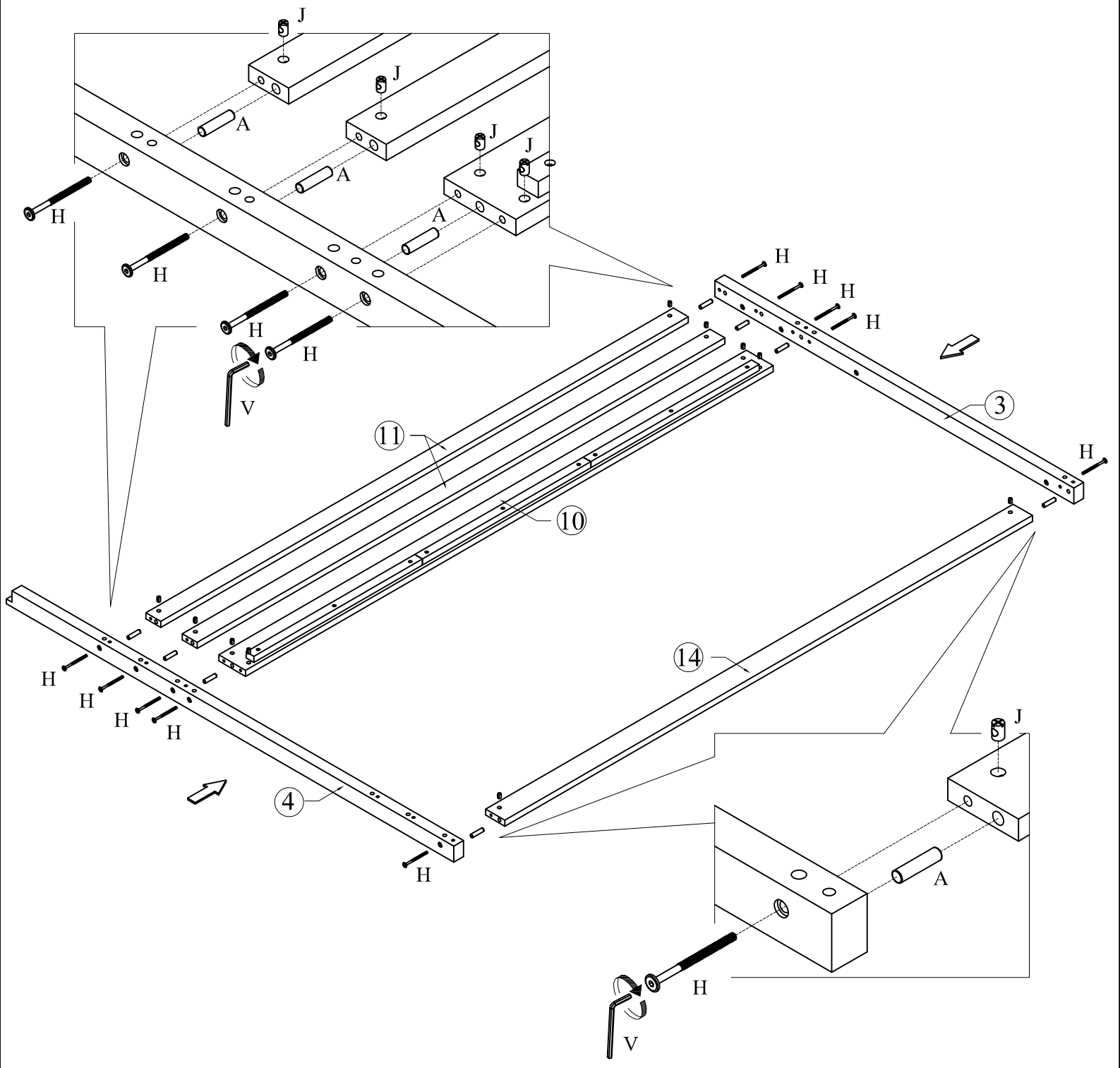

STEP 4

A		22
I	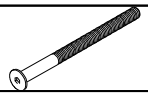	18
J		18

STEP 5

B		04

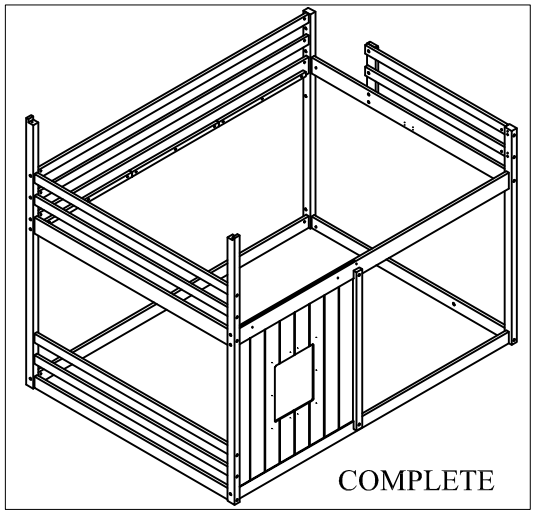

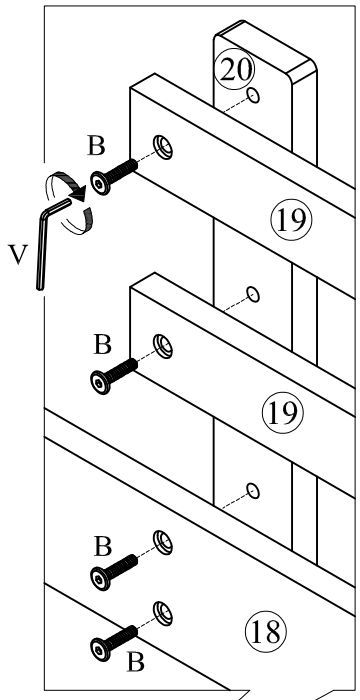

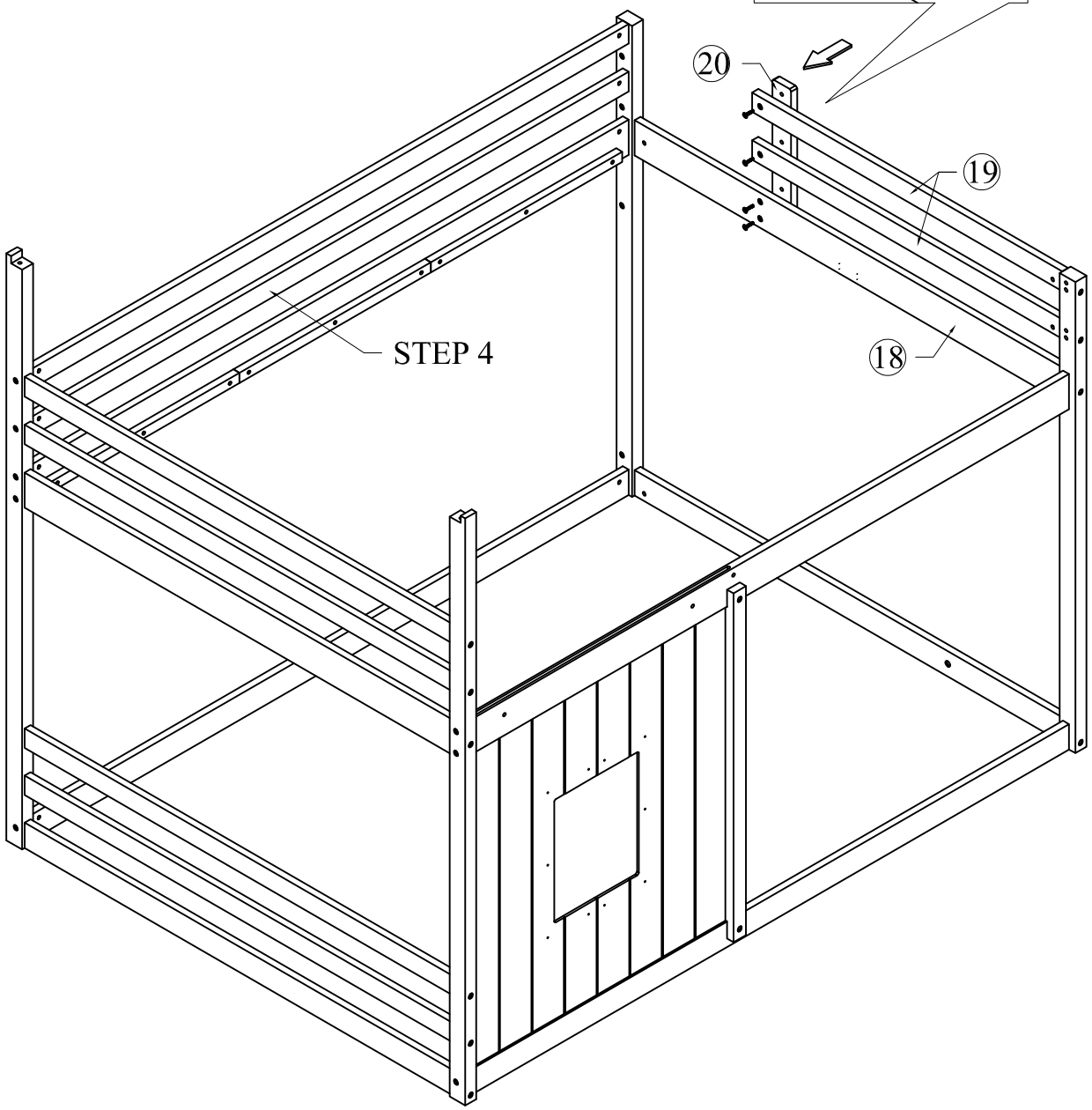

STEP 6

Ⓒ		05

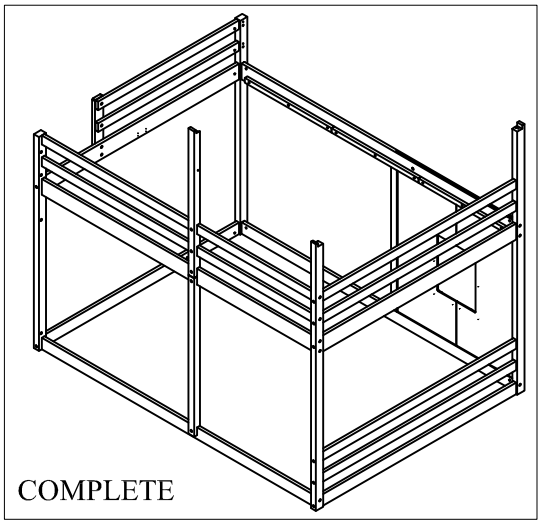

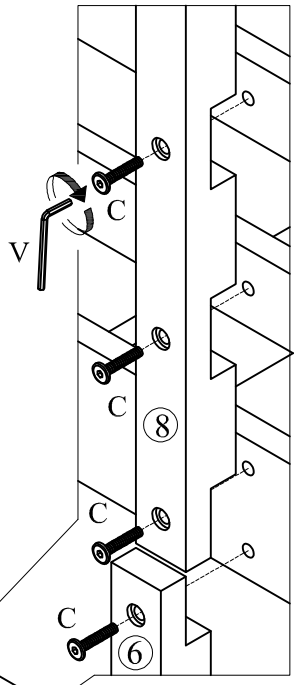

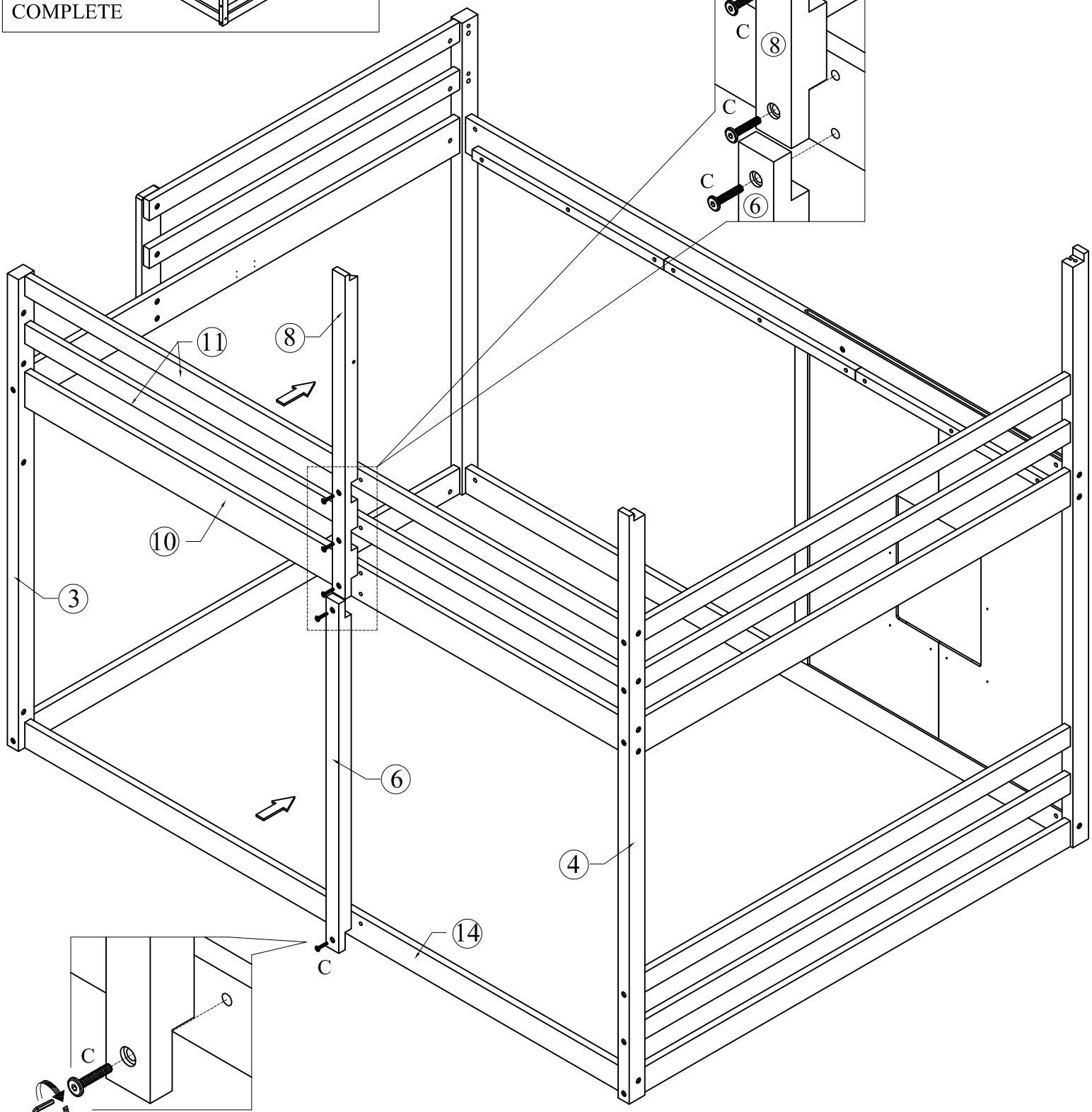

STEP 7

A		04
G		02
H		02
J		04

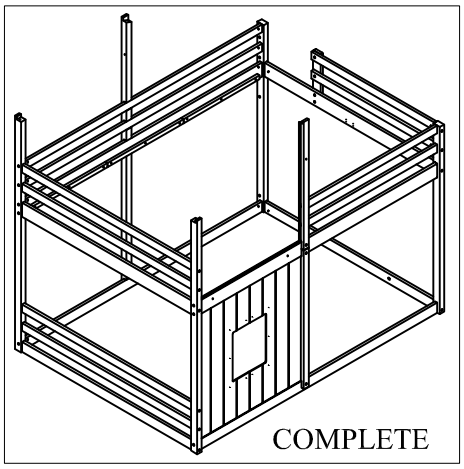

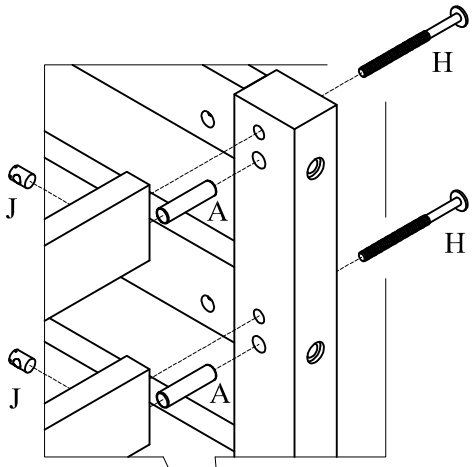

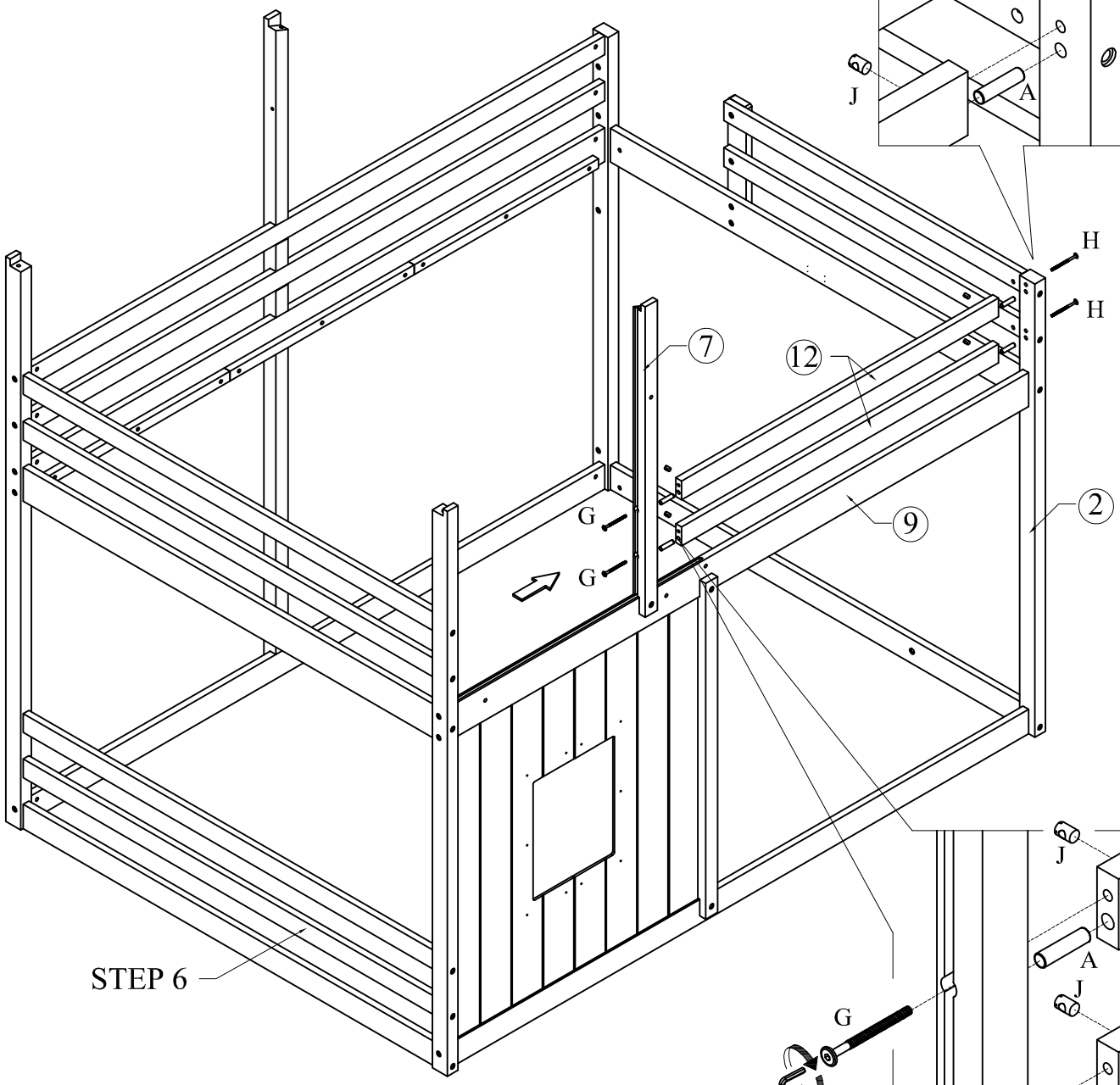

STEP 8

©		01

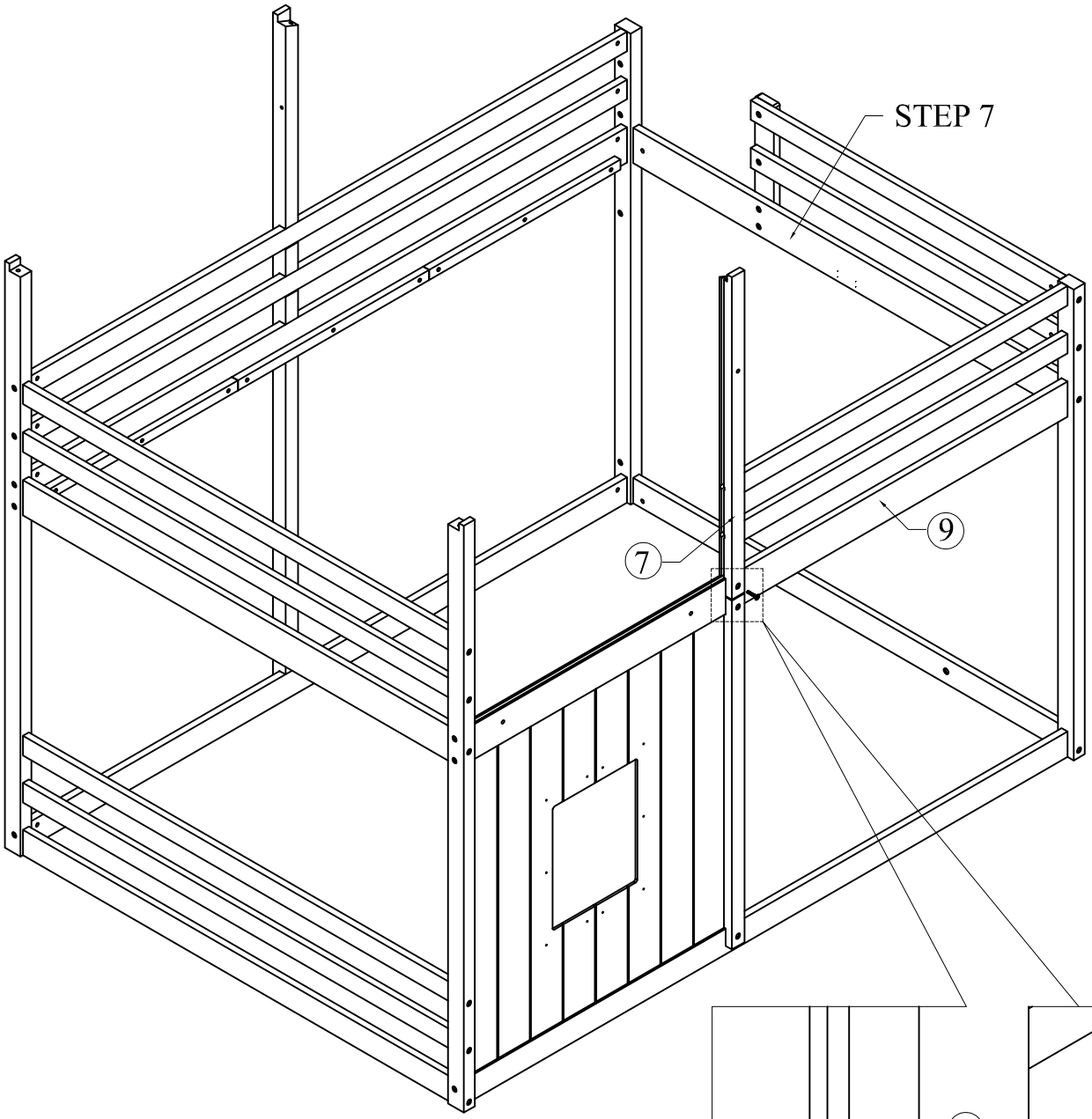

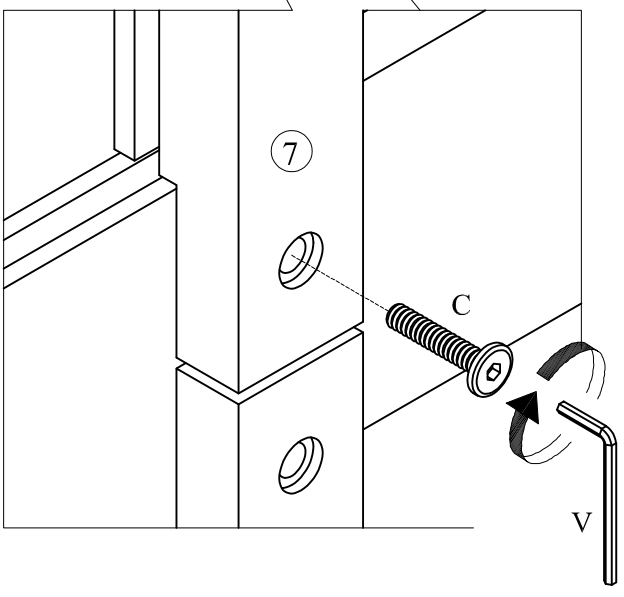

STEP 9

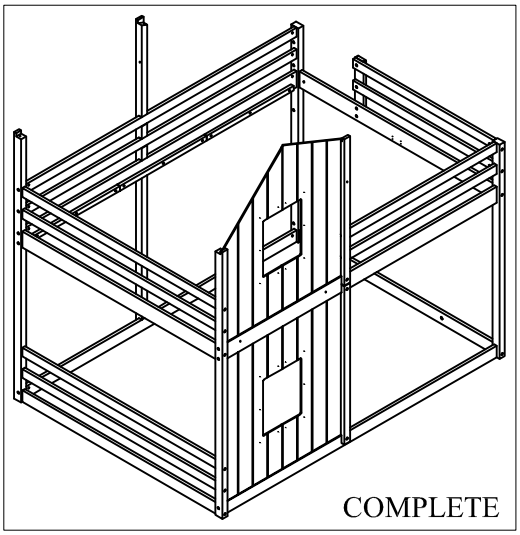

Insert panels 32 and 33 one by one into the pre-made grooves on parts 1 and 7.

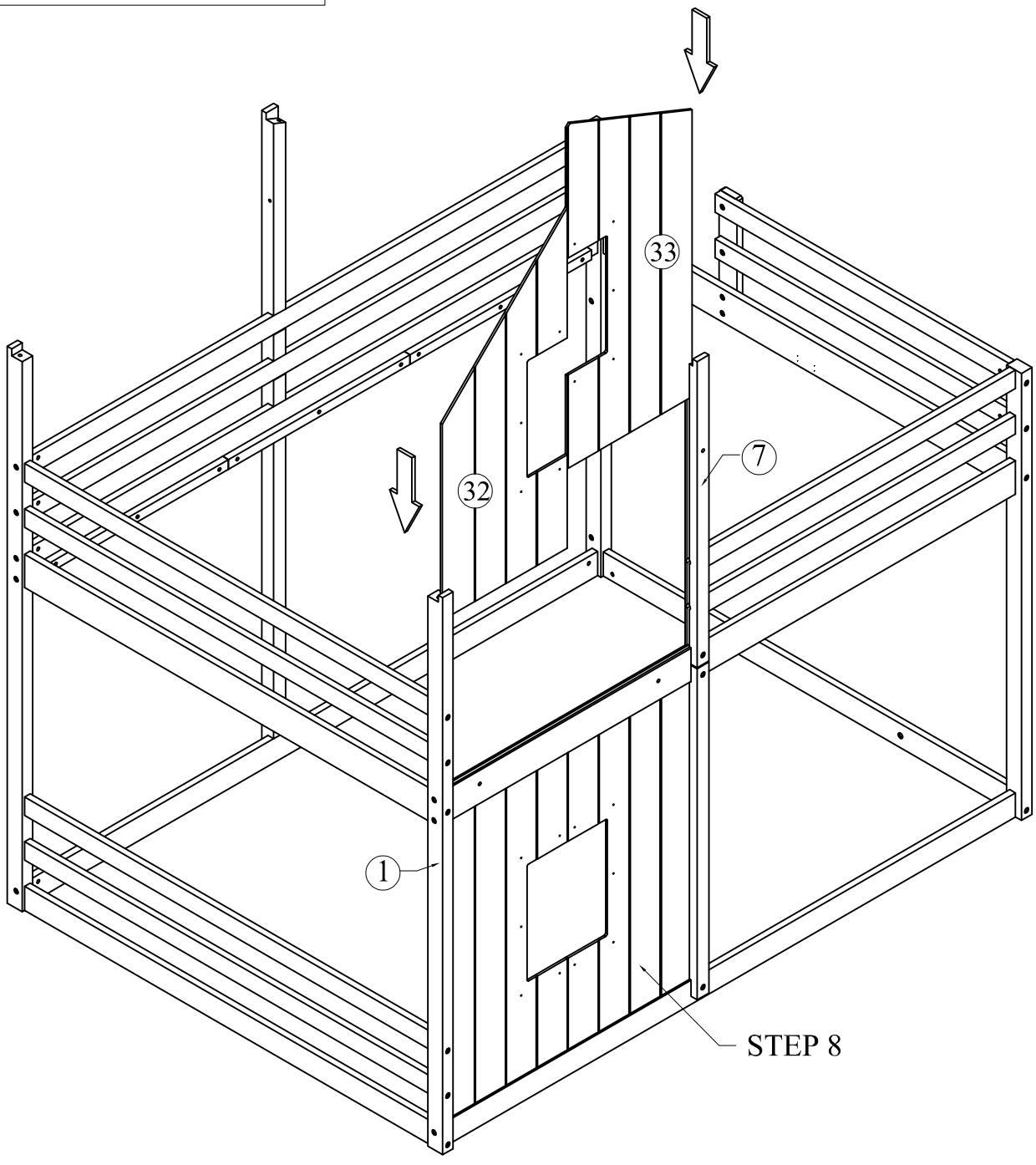

STEP 10

G		02

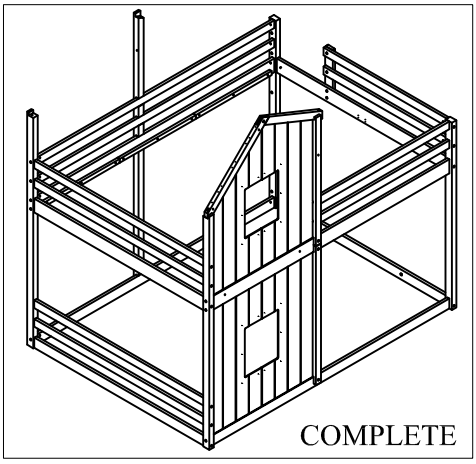

Assemble parts 21 and 23 so that panels 32 and 33 fit into the pre-made grooves.

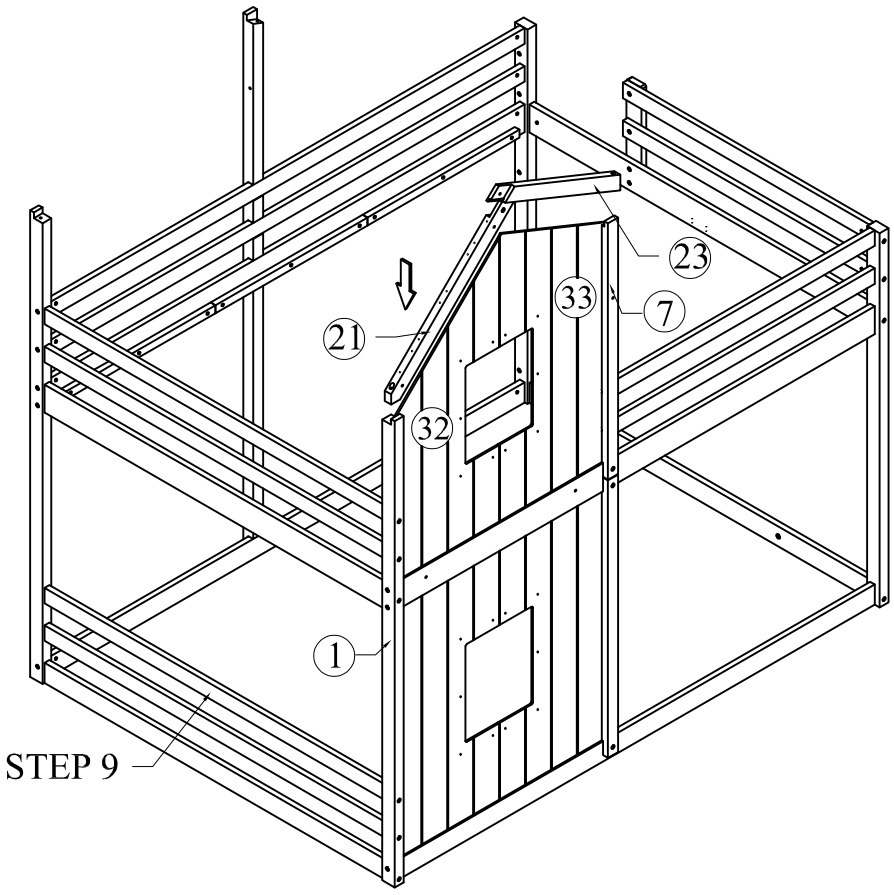

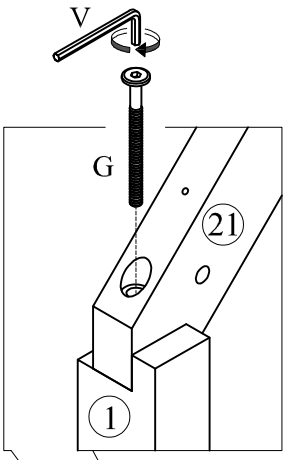

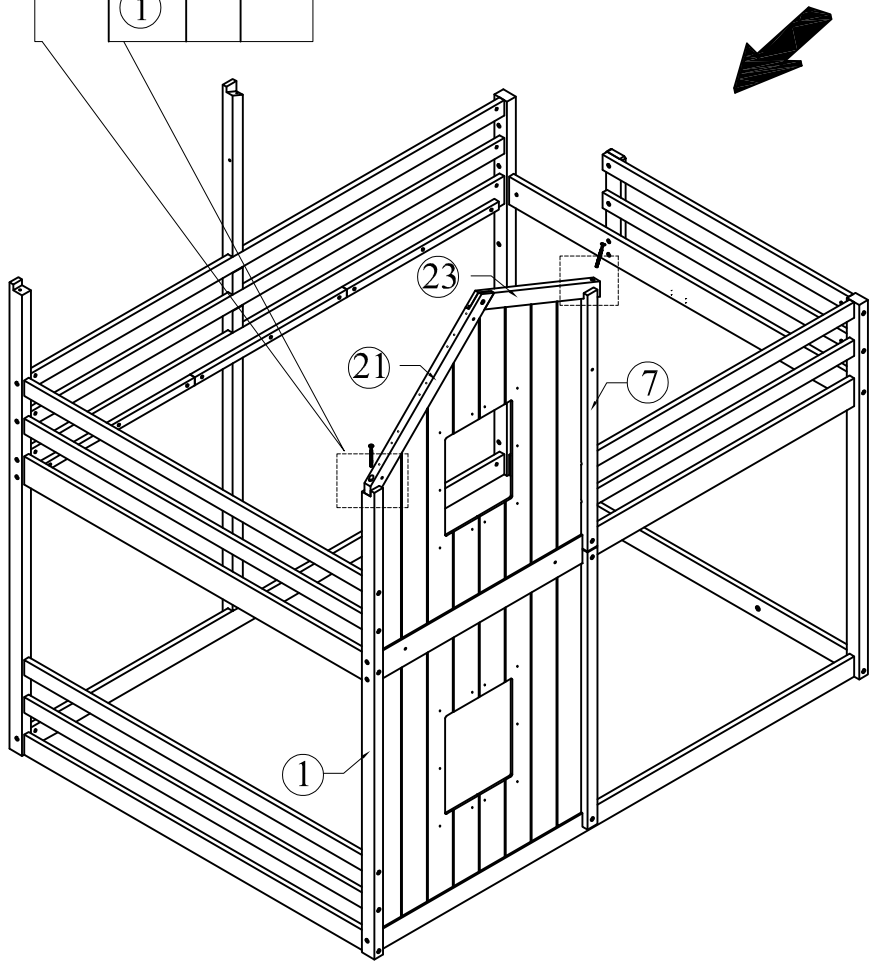

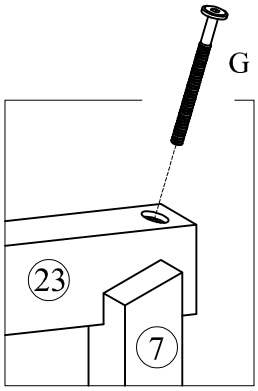

STEP 11

D		02
G		02

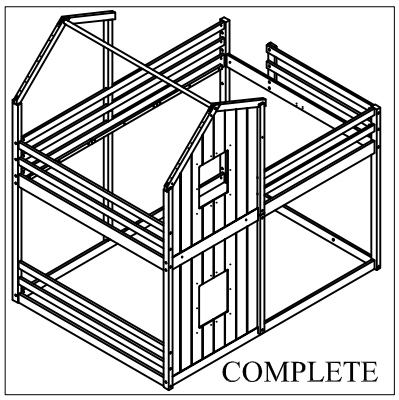

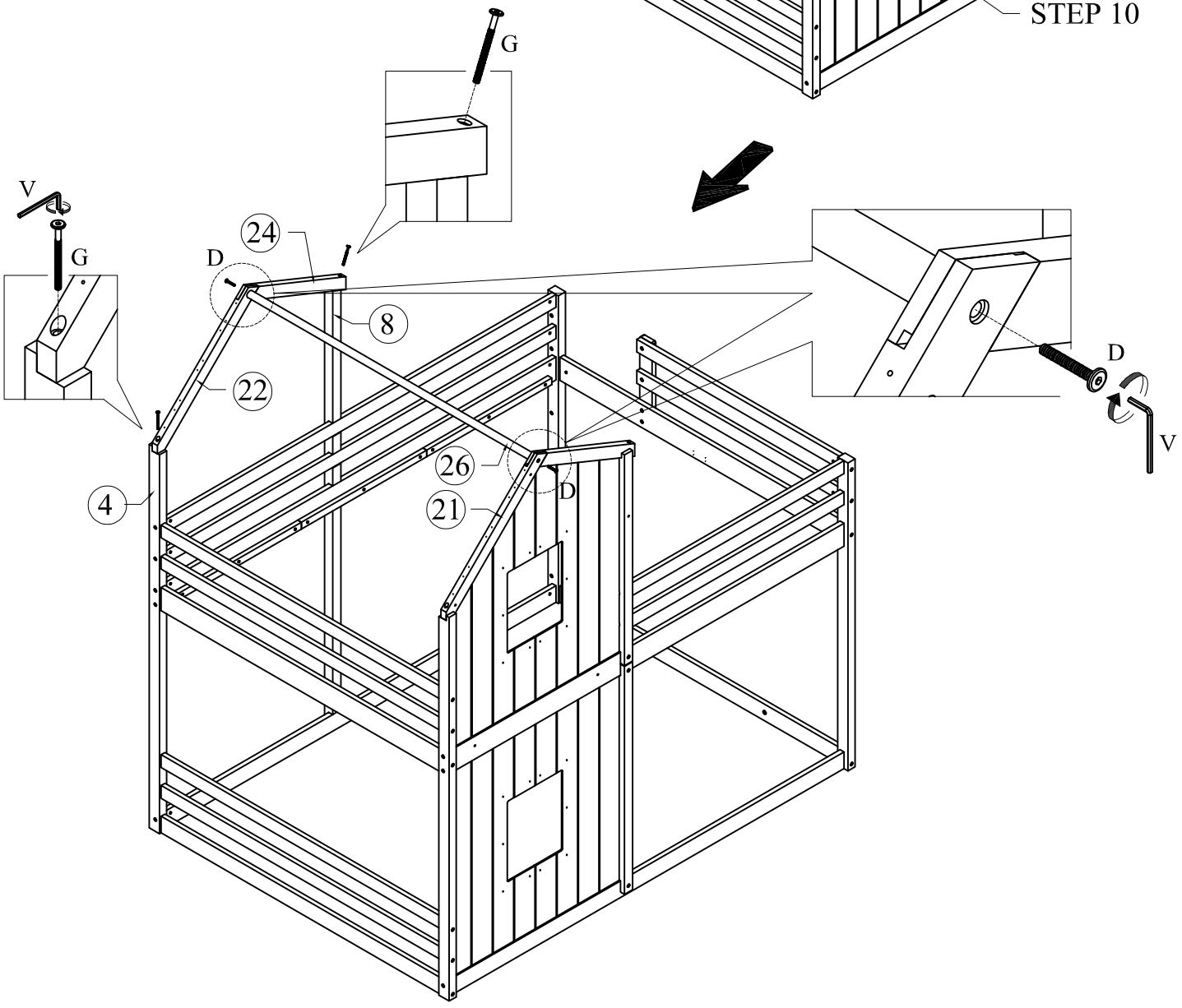

STEP 12

L		20

Assemble the window frame (34) at the pre-drilled holes.

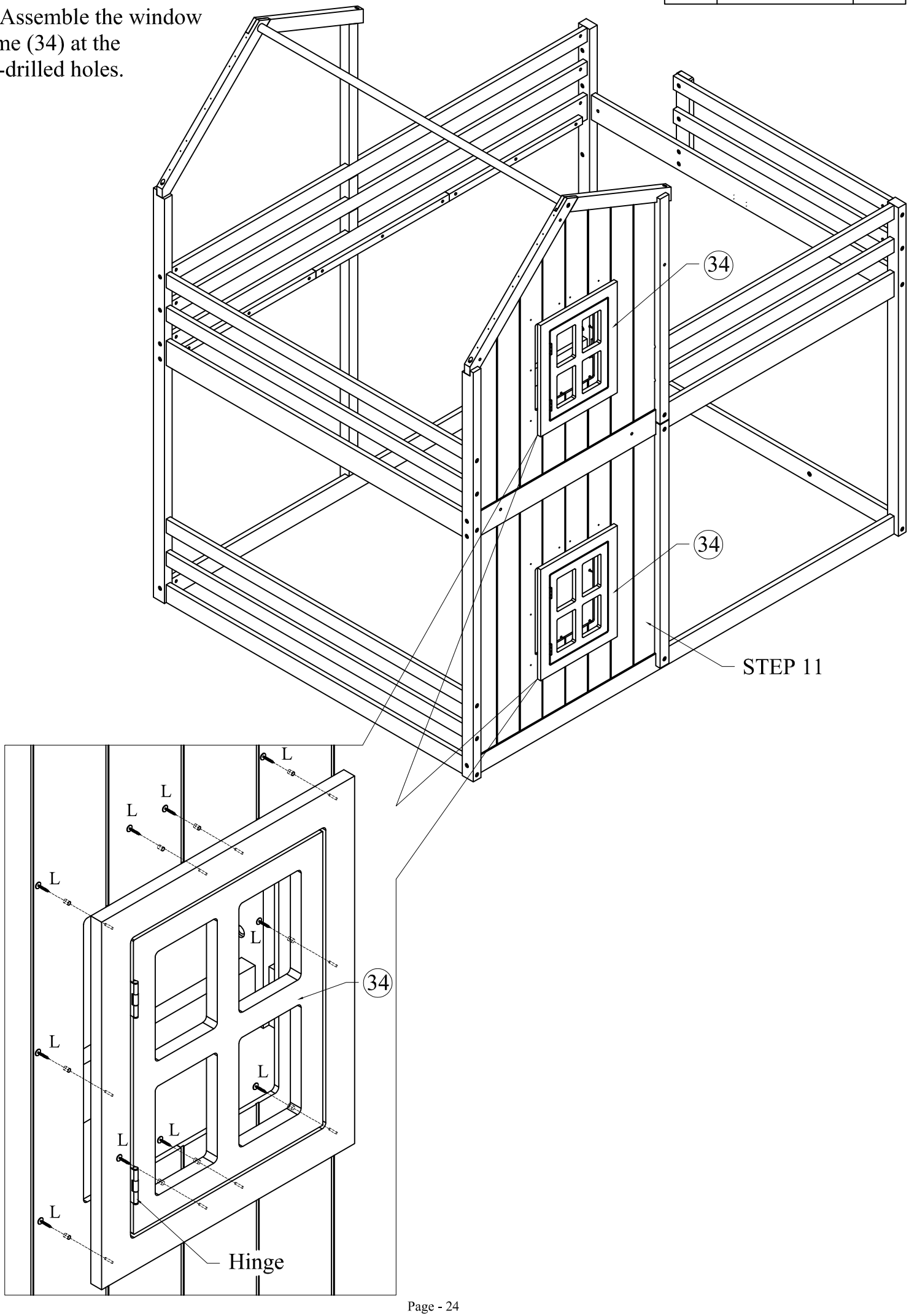

STEP 13

Ⓒ		02

Assemble the Decorative roof (35) at the pre-drilled holes.

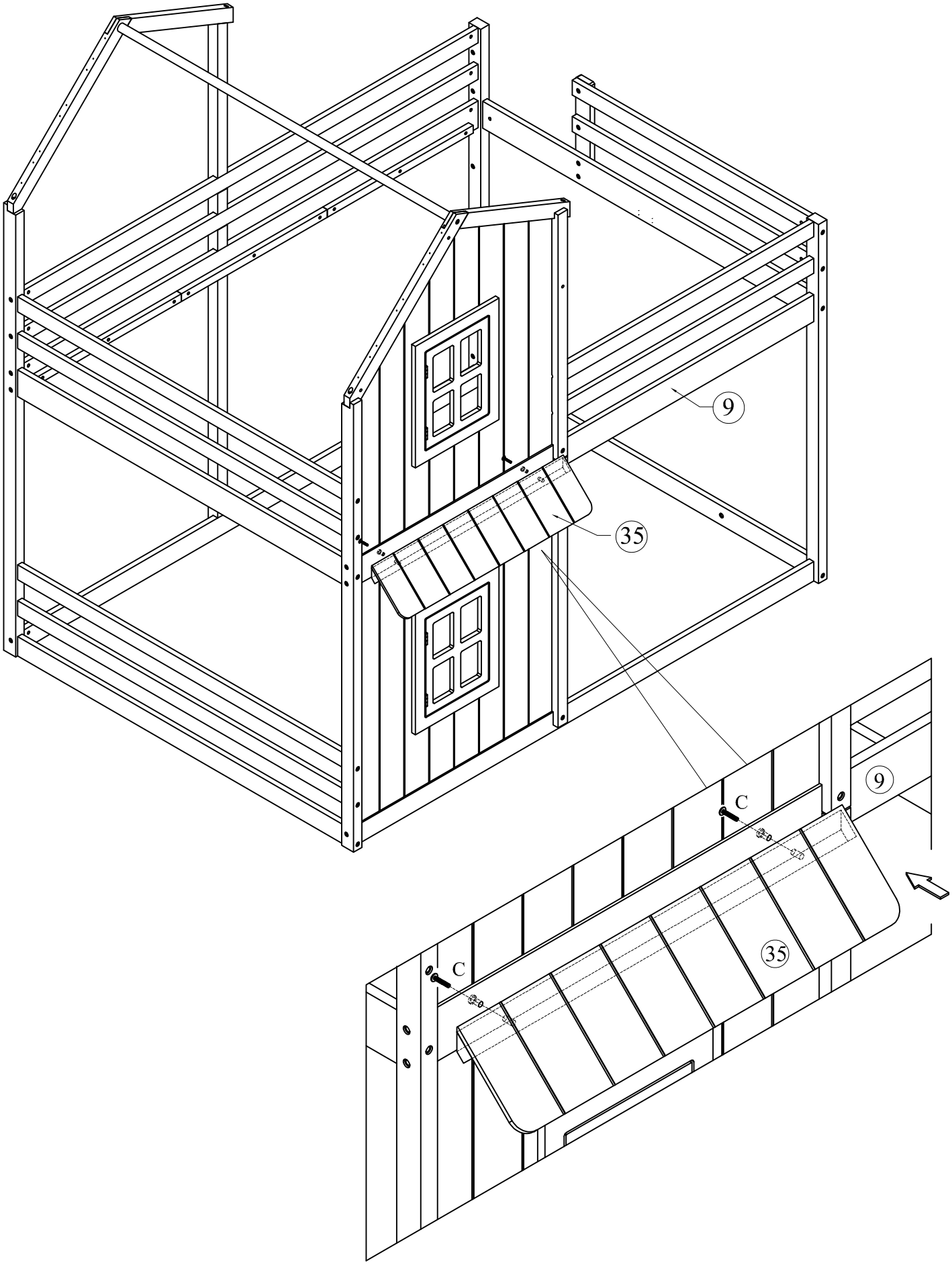

STEP 14

A		02
D		02
E		01

STEP 14.1

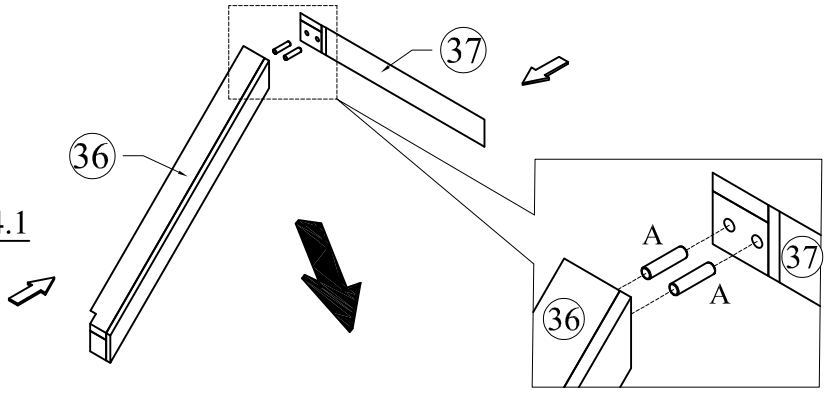

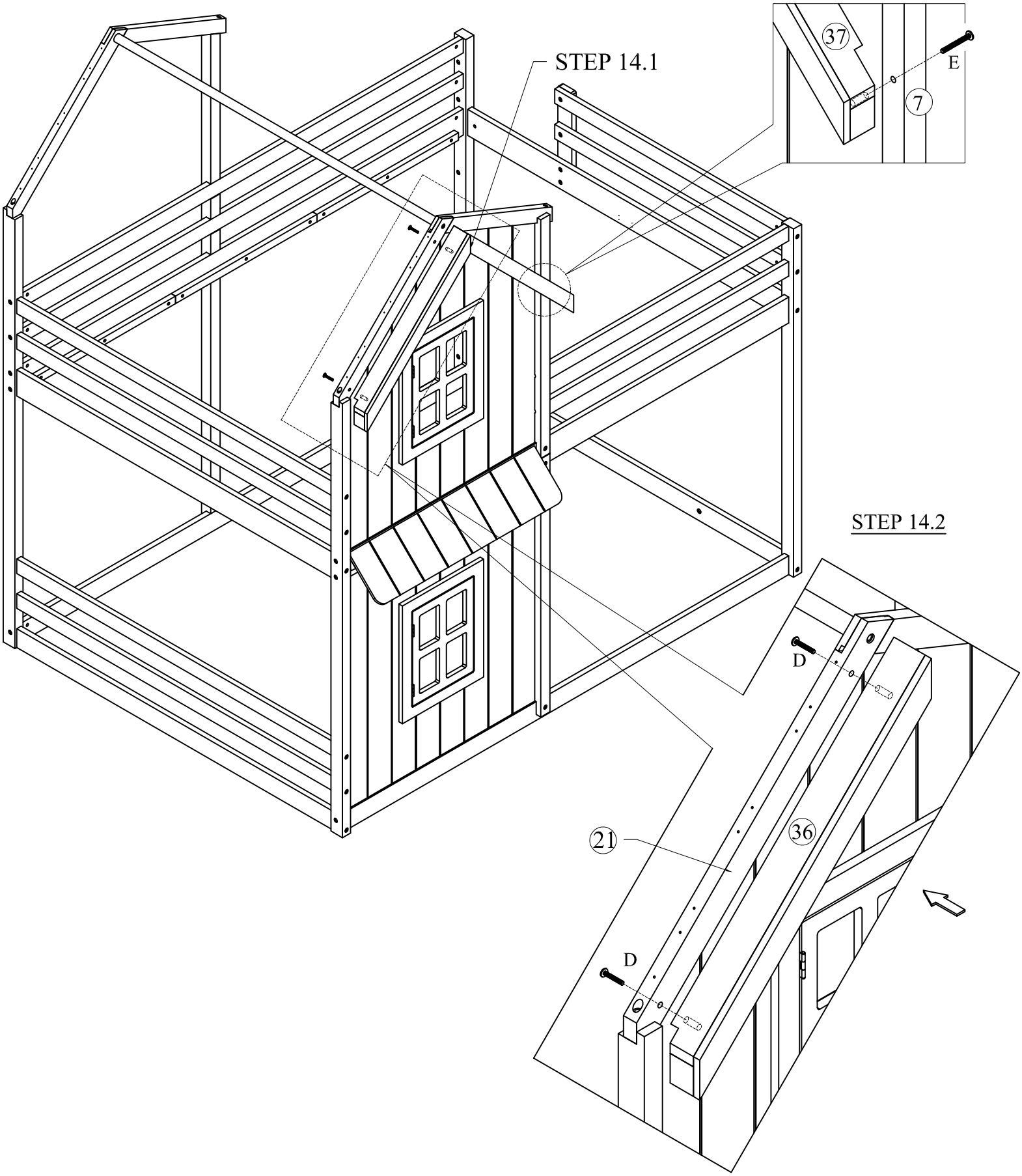

STEP 15

N		04
U		01

Attach the Patt (U) underneath parts 36 and 37 at the pre-drilled holes.

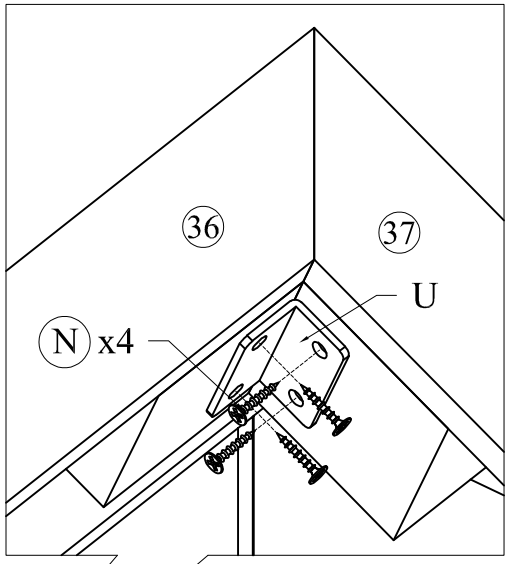

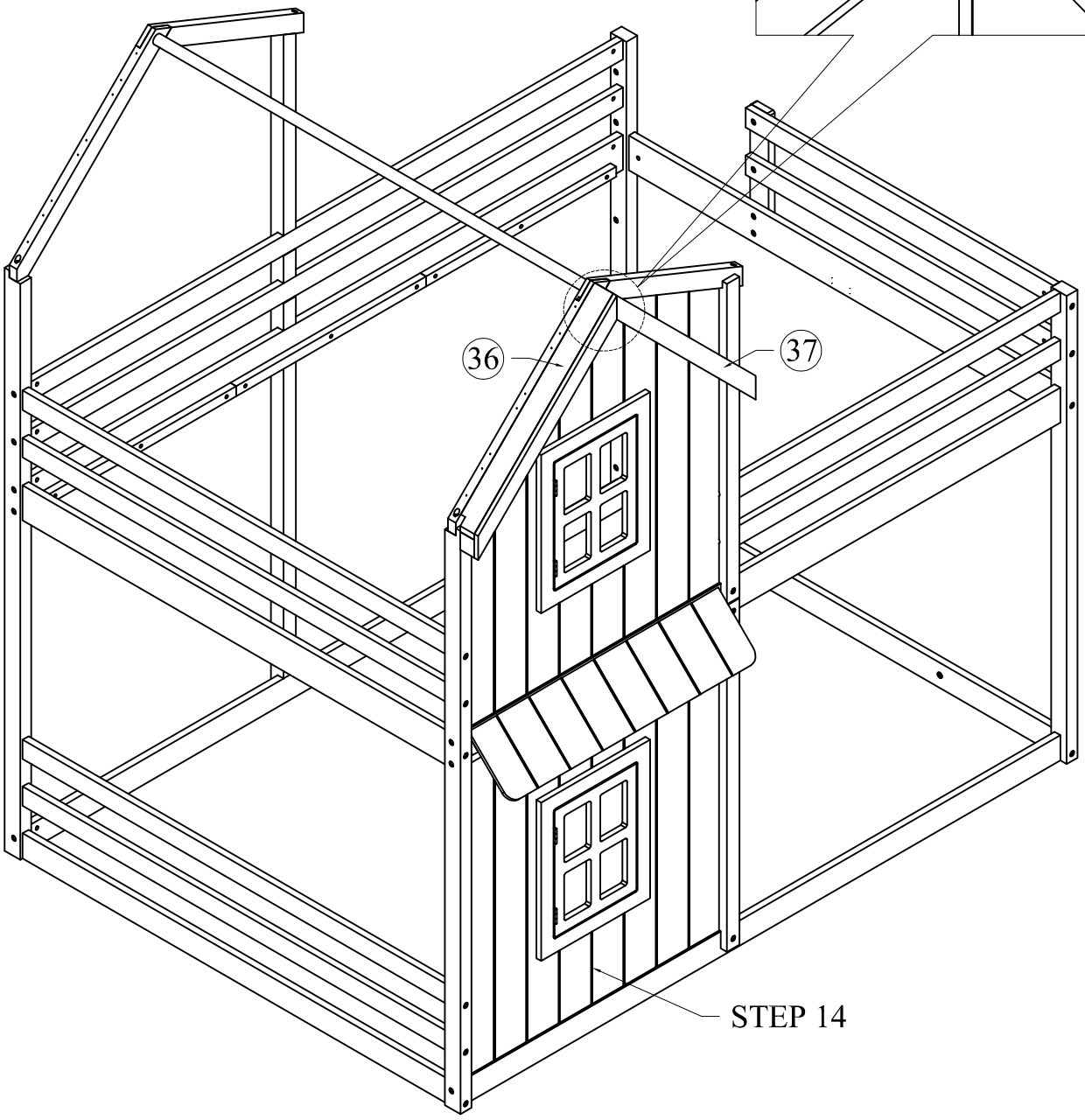

STEP 16

Ⓓ		02

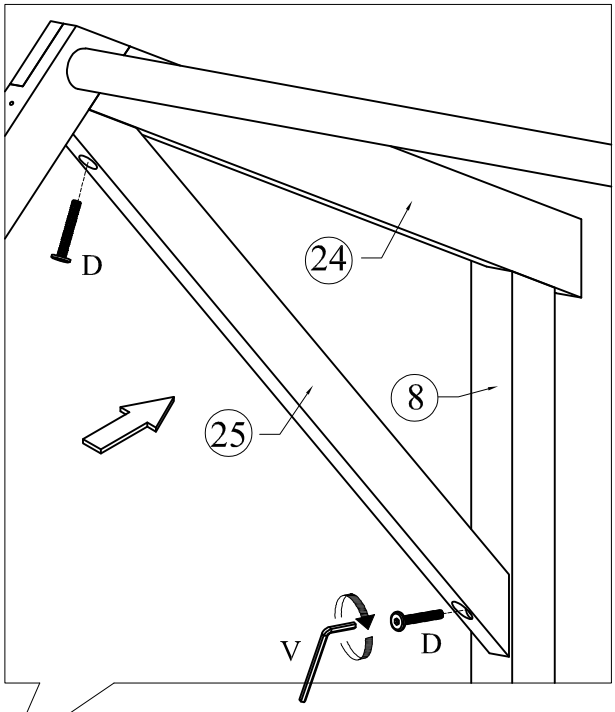

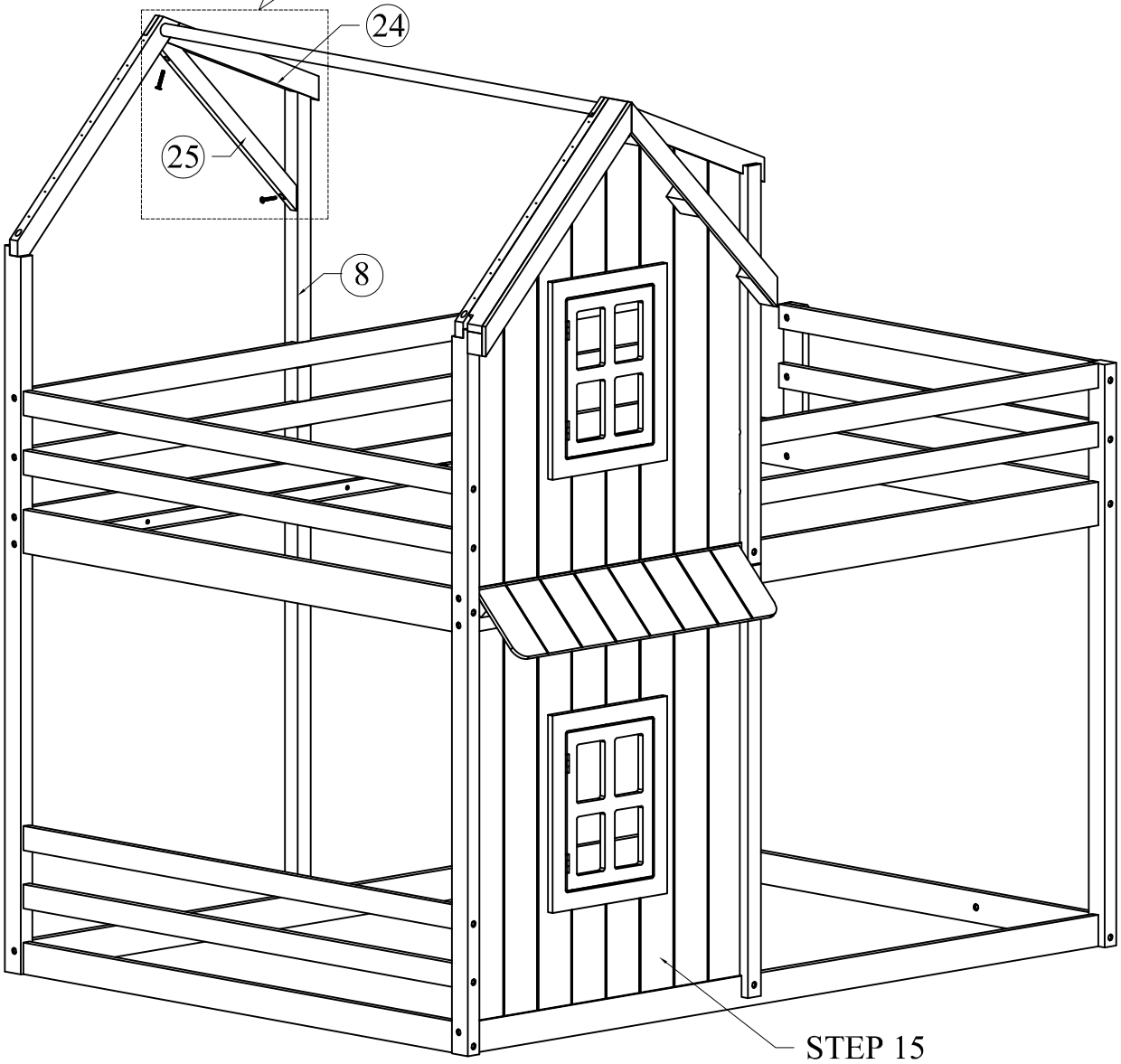

STEP 17

Ⓛ		20

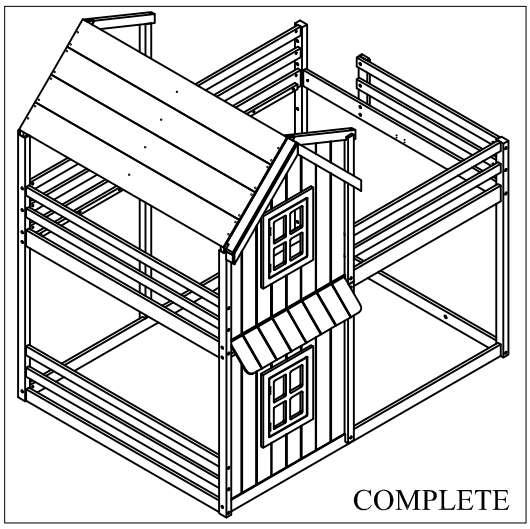

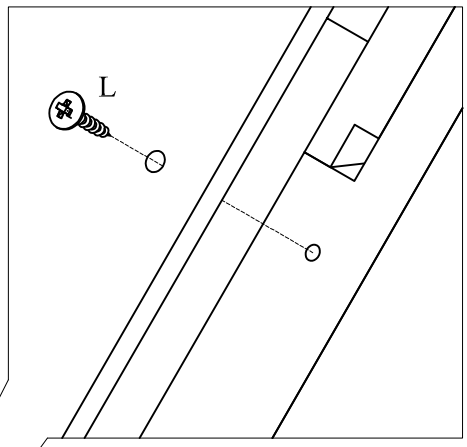

Note: Part 29 is assembled from the inside.

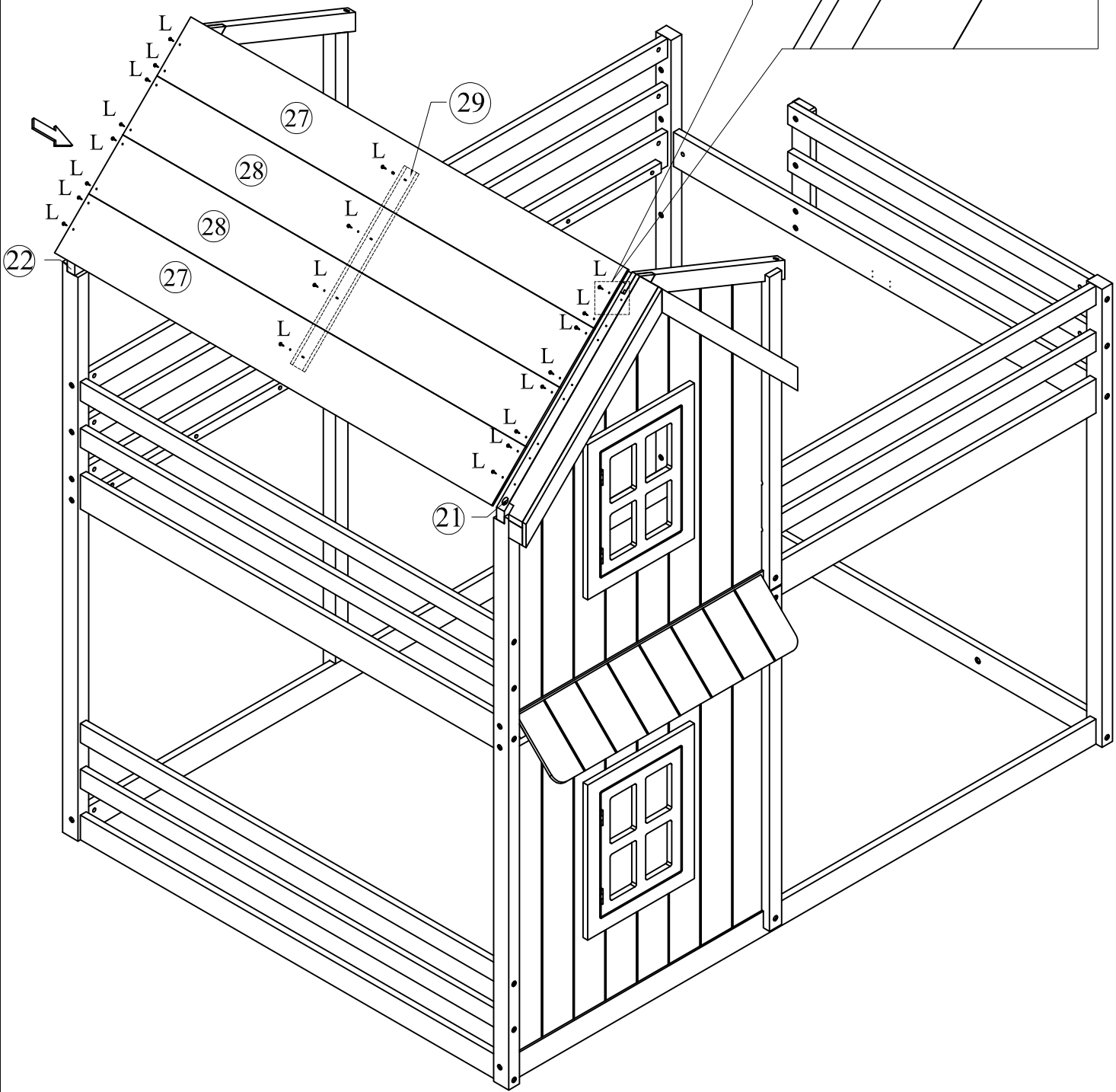

STEP 18

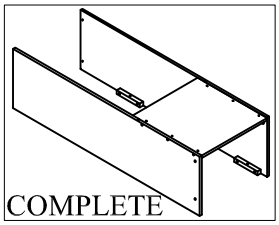

P		06

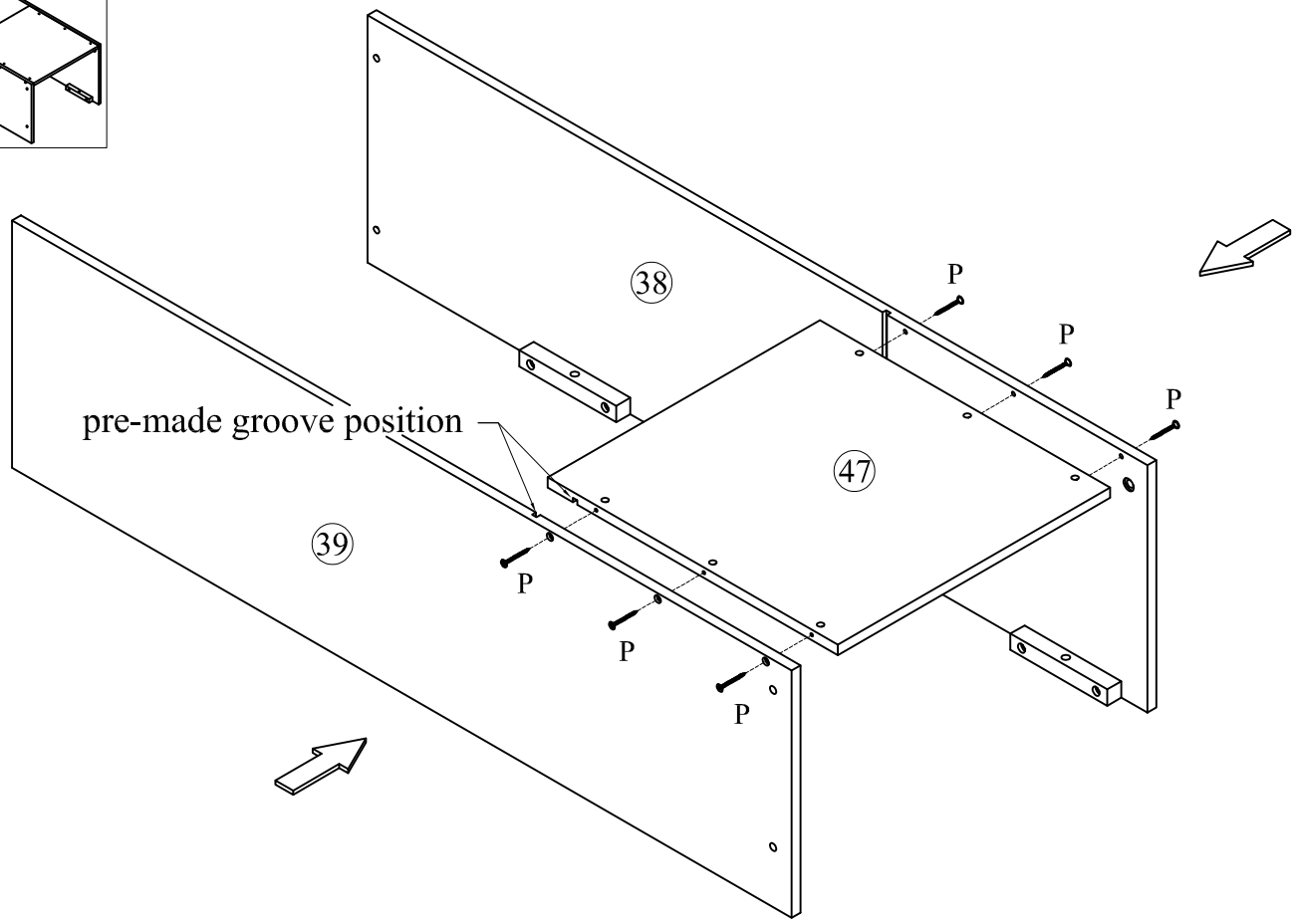

STEP 19

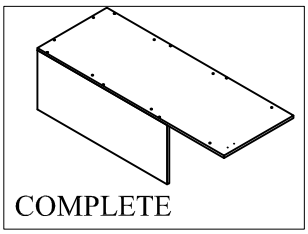

P		06

STEP 20

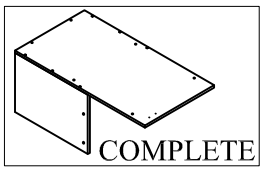

P		06

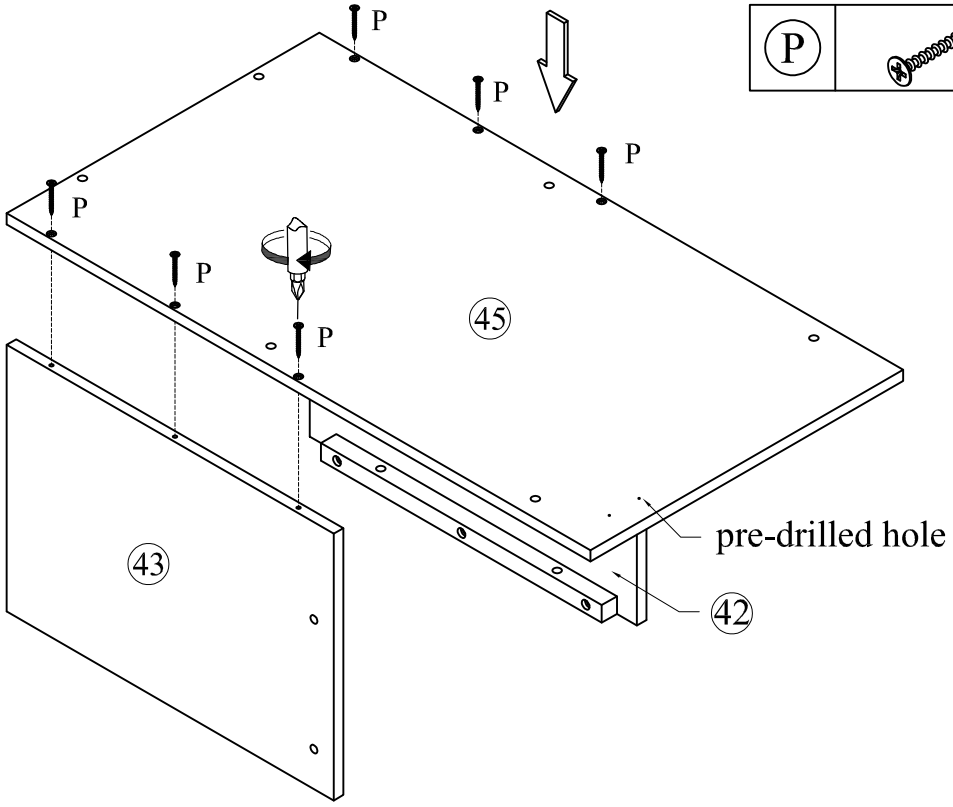

STEP 21

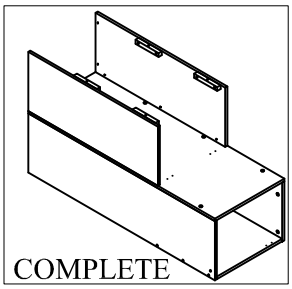

B		06

Place part 48 into the pre-made groove.

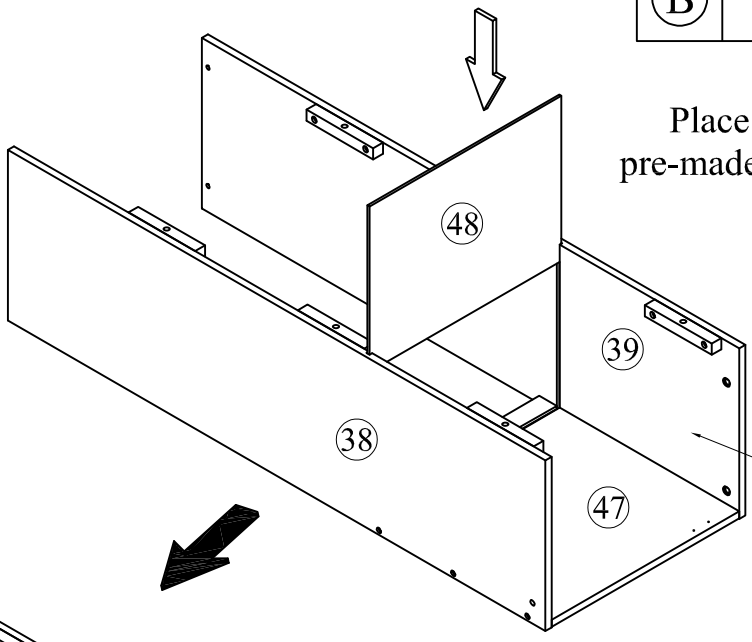

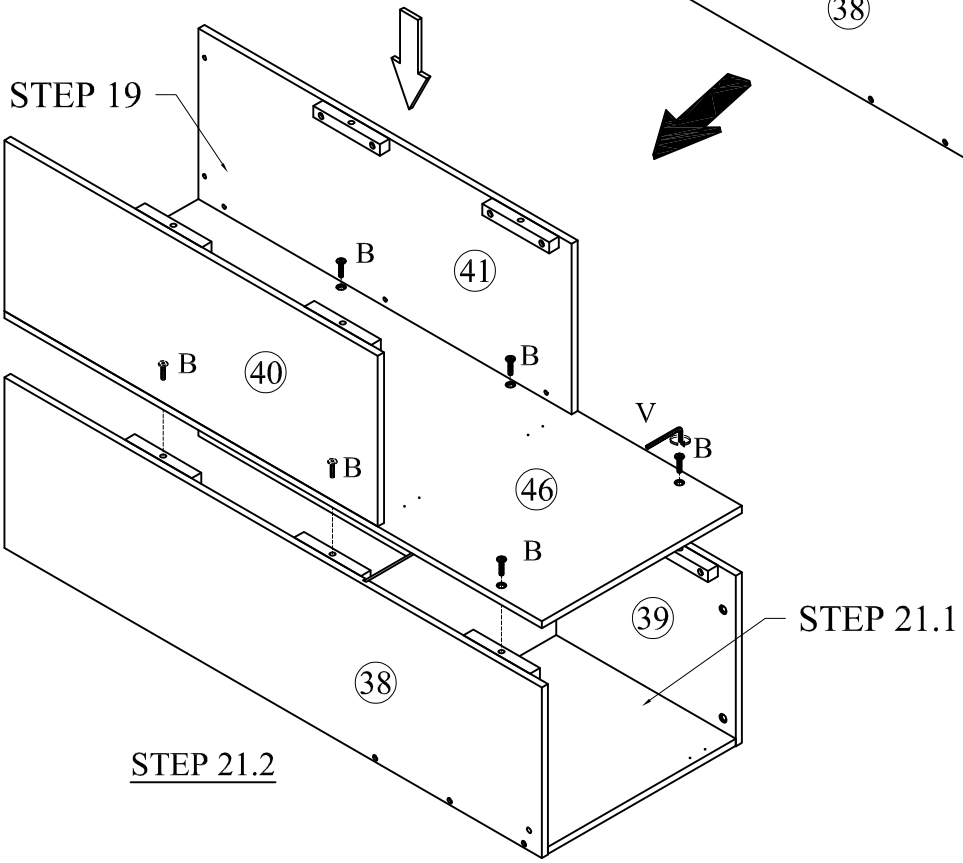

STEP 22

B		02

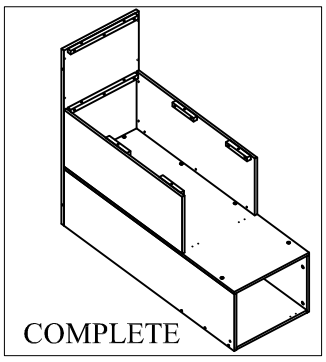

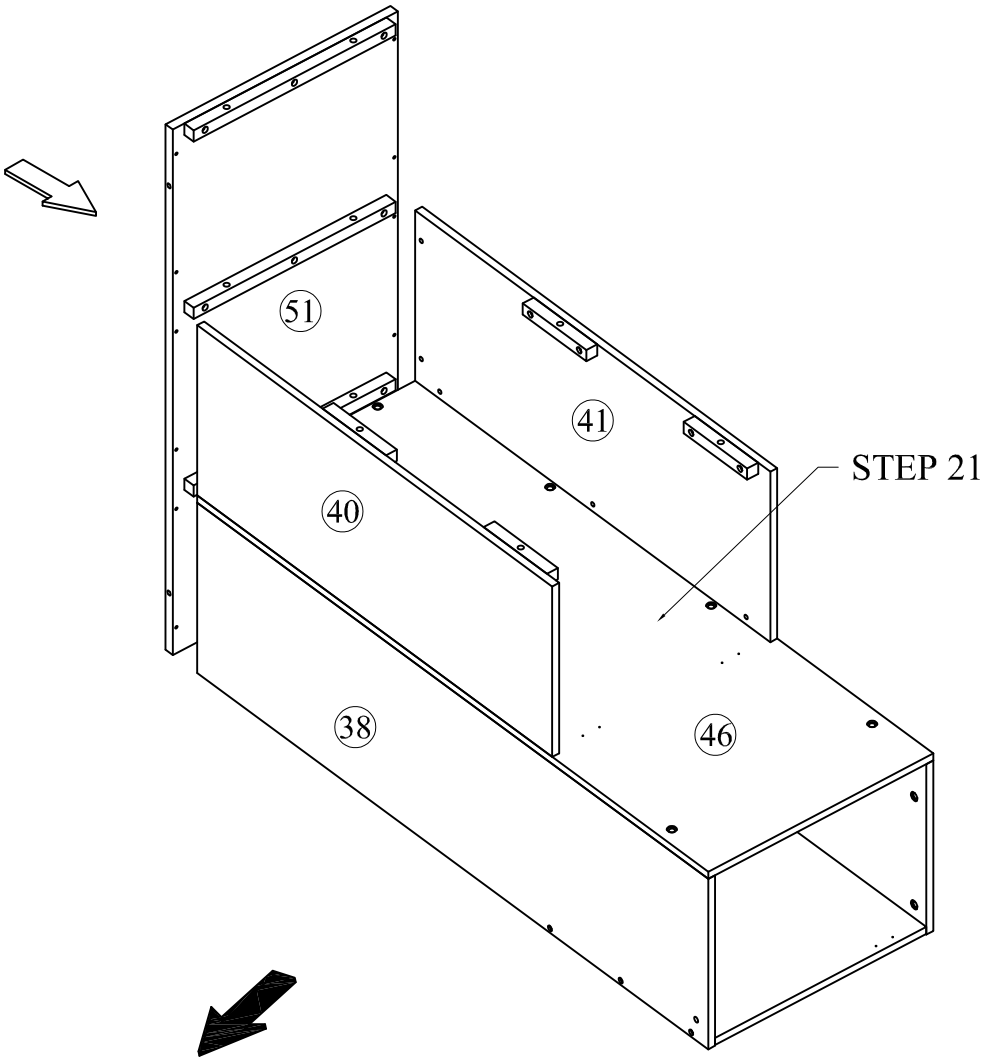

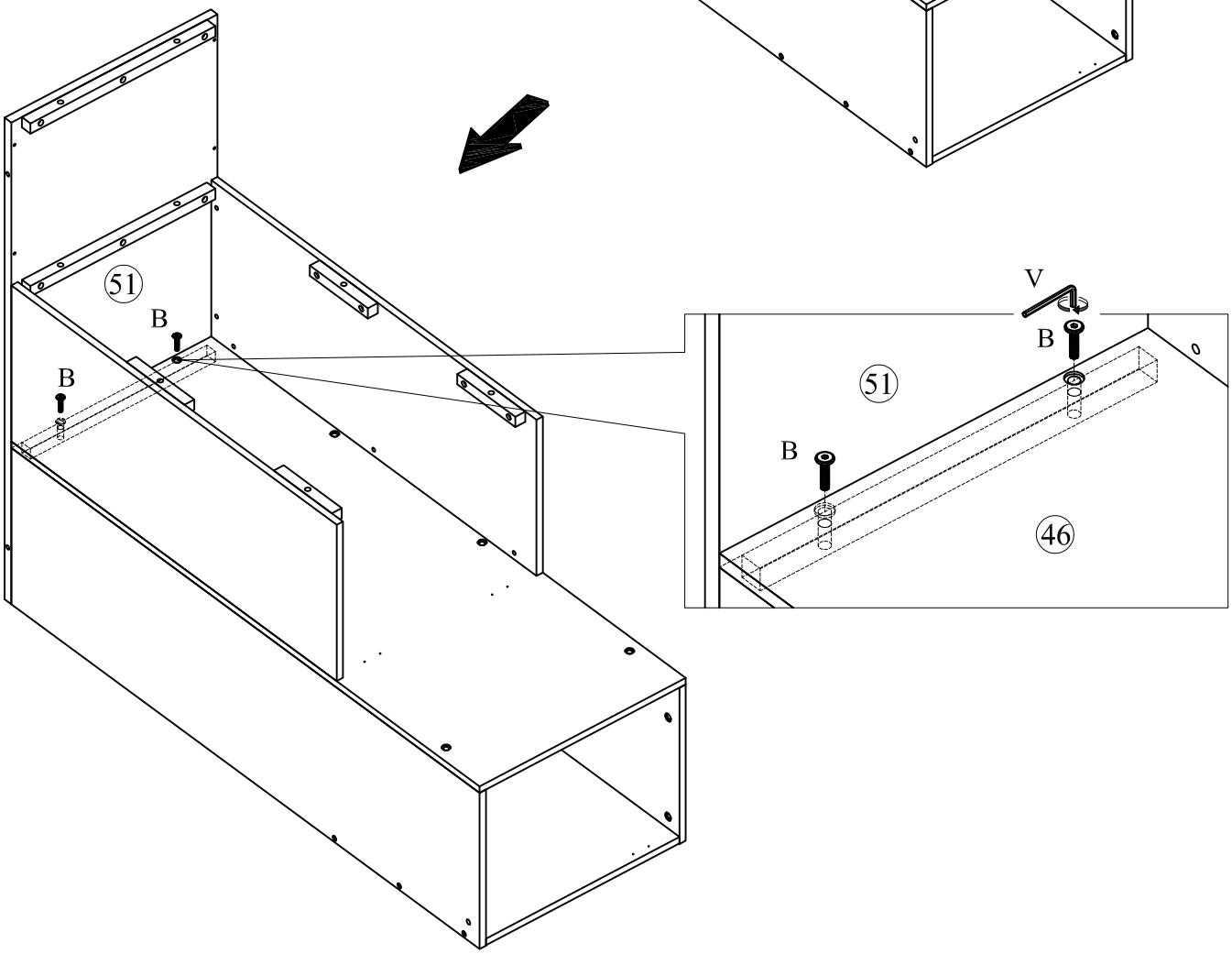

STEP 23

B		06

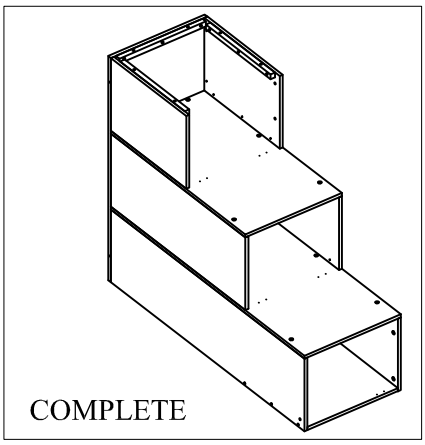

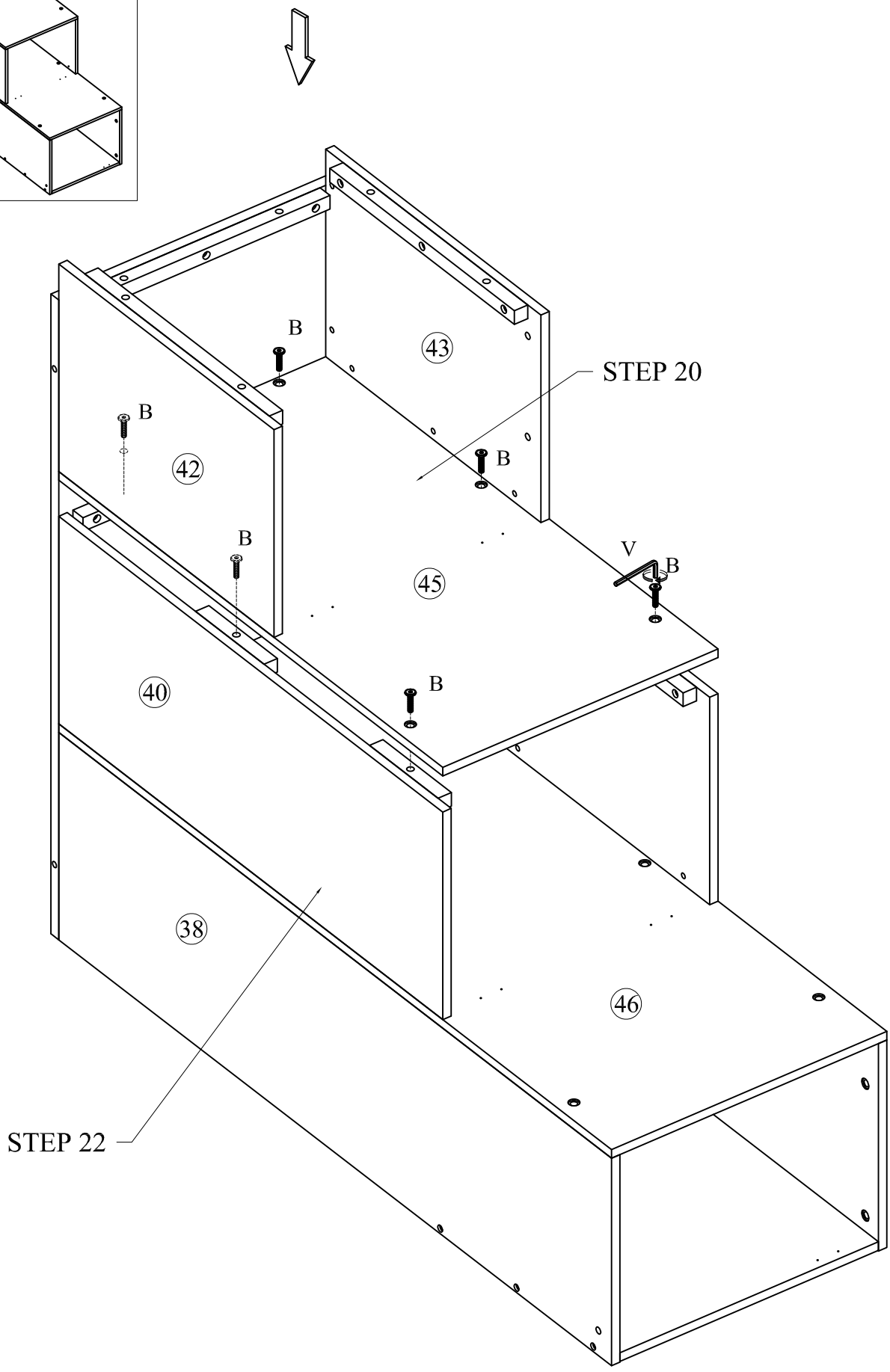

STEP 24

P	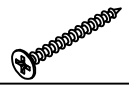	12

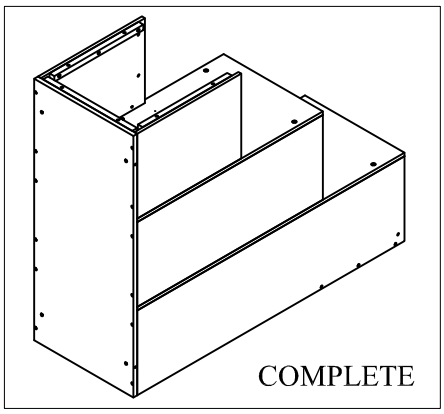

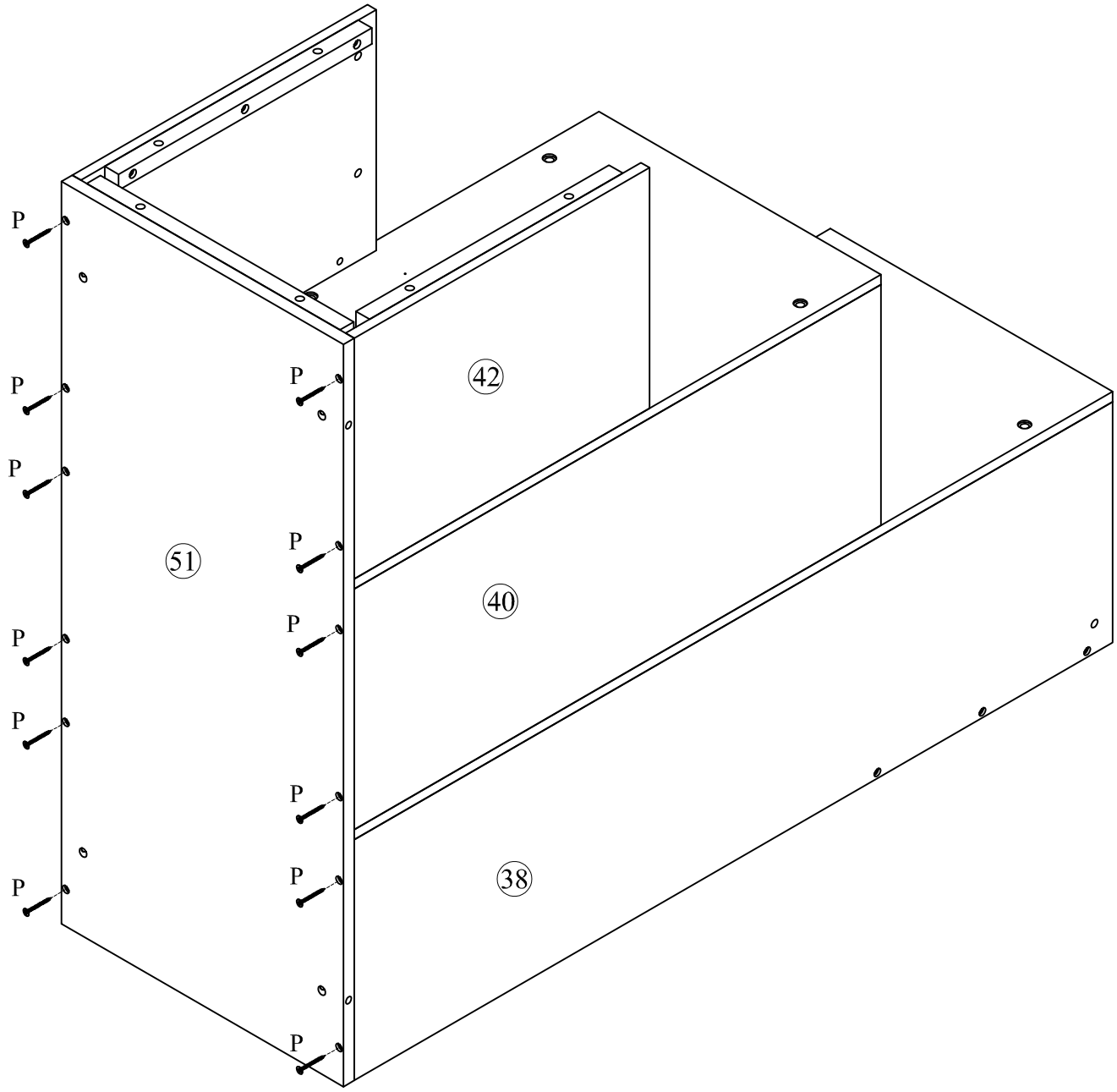

STEP 25

B		06

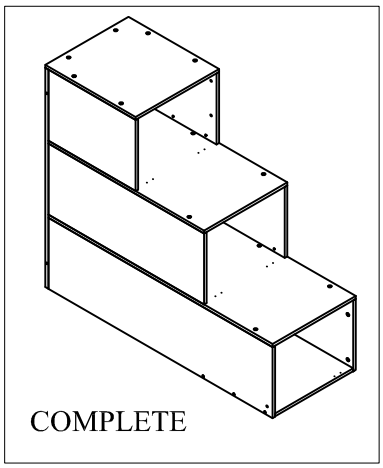

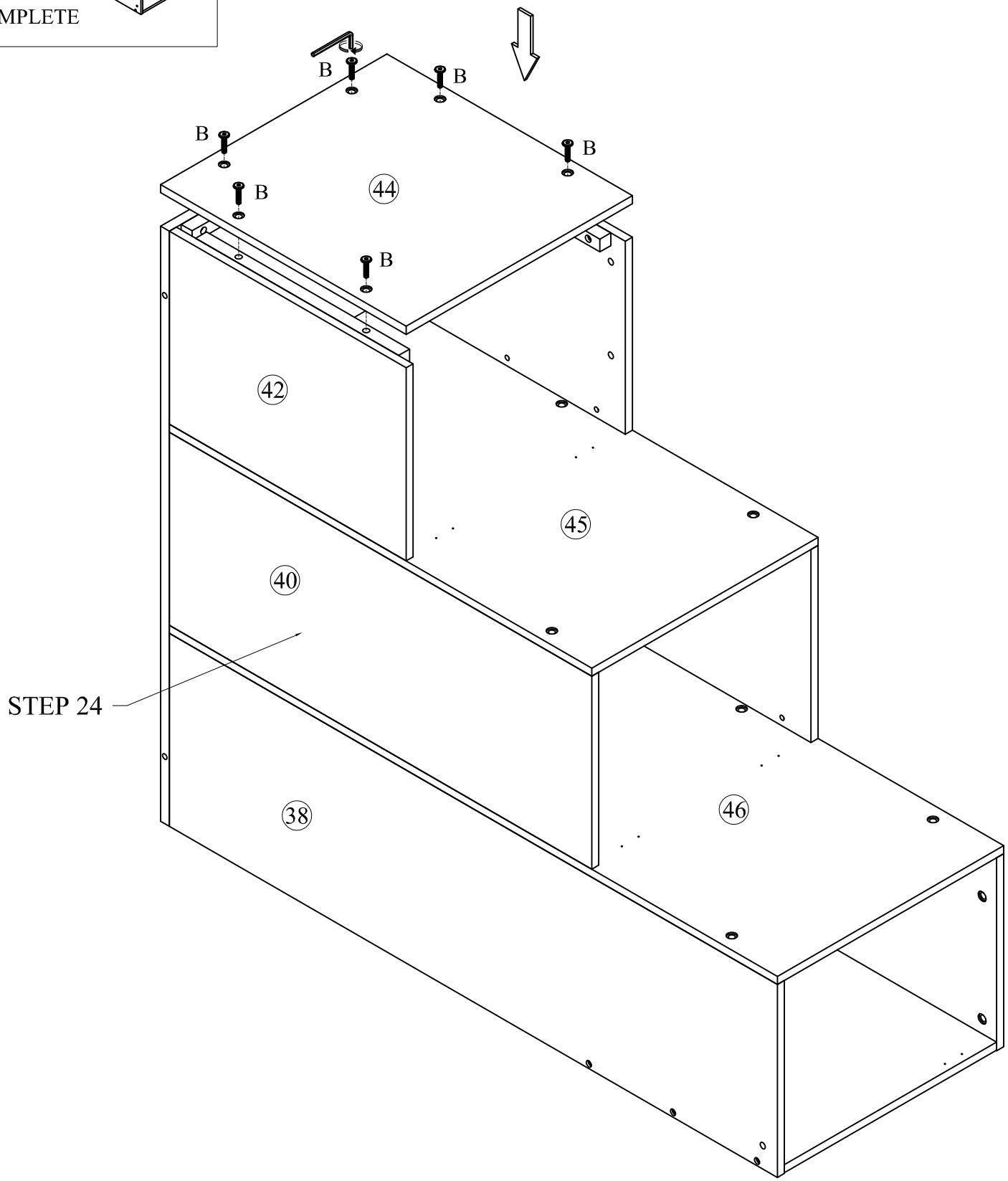

STEP 26

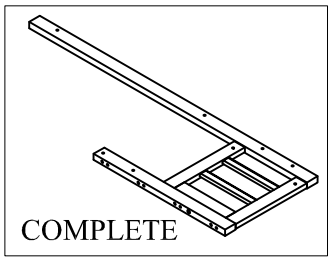

A		02
F		01
I	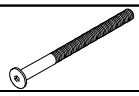	02
J		02

STEP 27

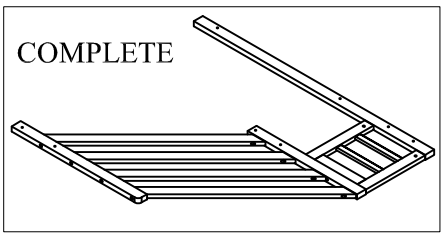

A		08
D		04
F		04

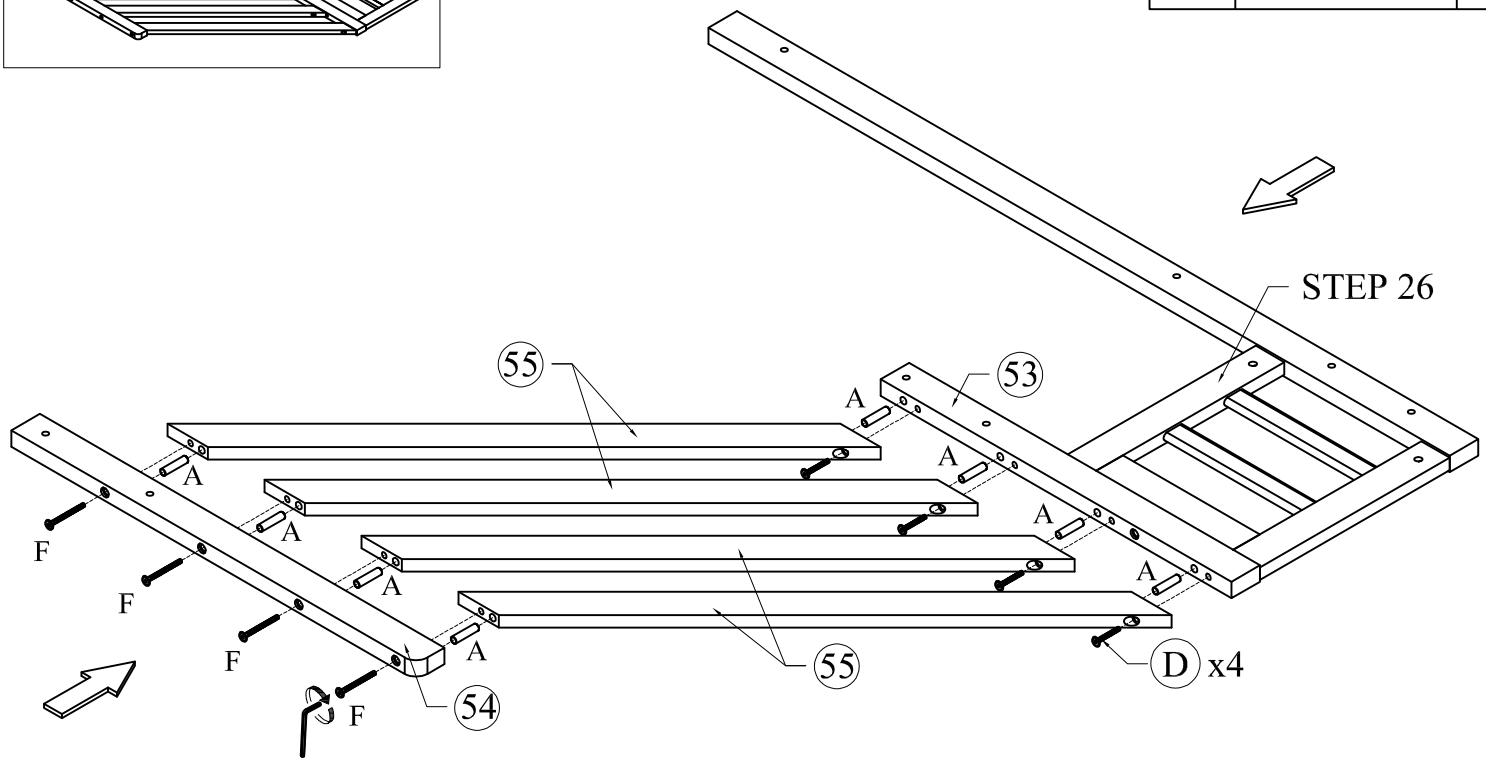

STEP 28

B		04

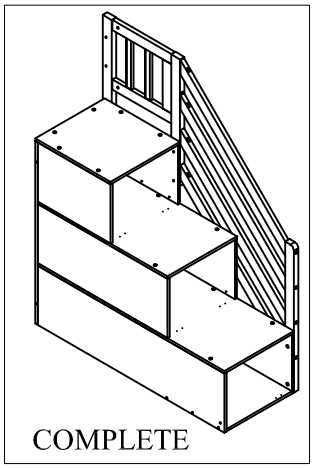

COMPLETE

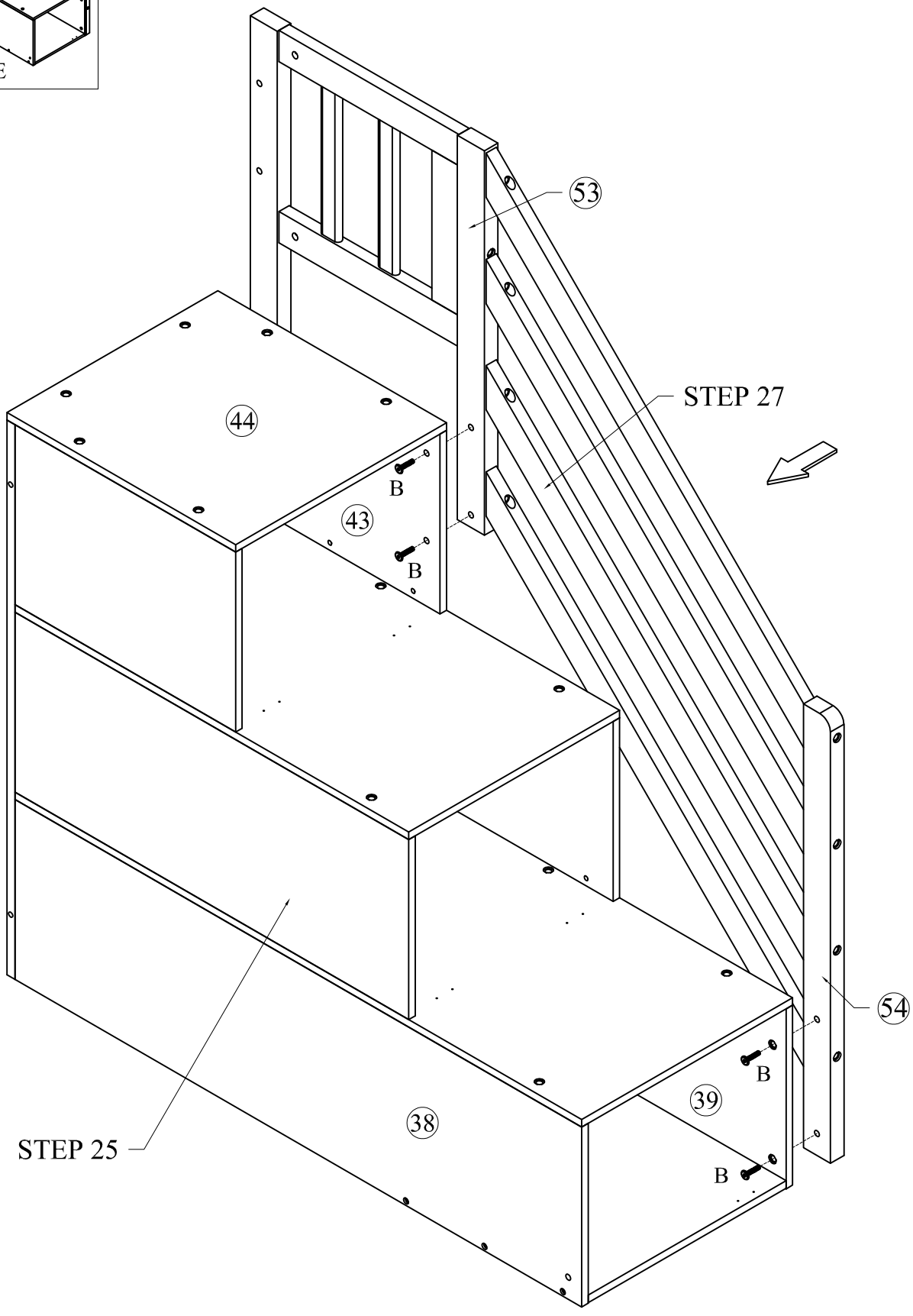

STEP 29

D		02
G		02
J		02

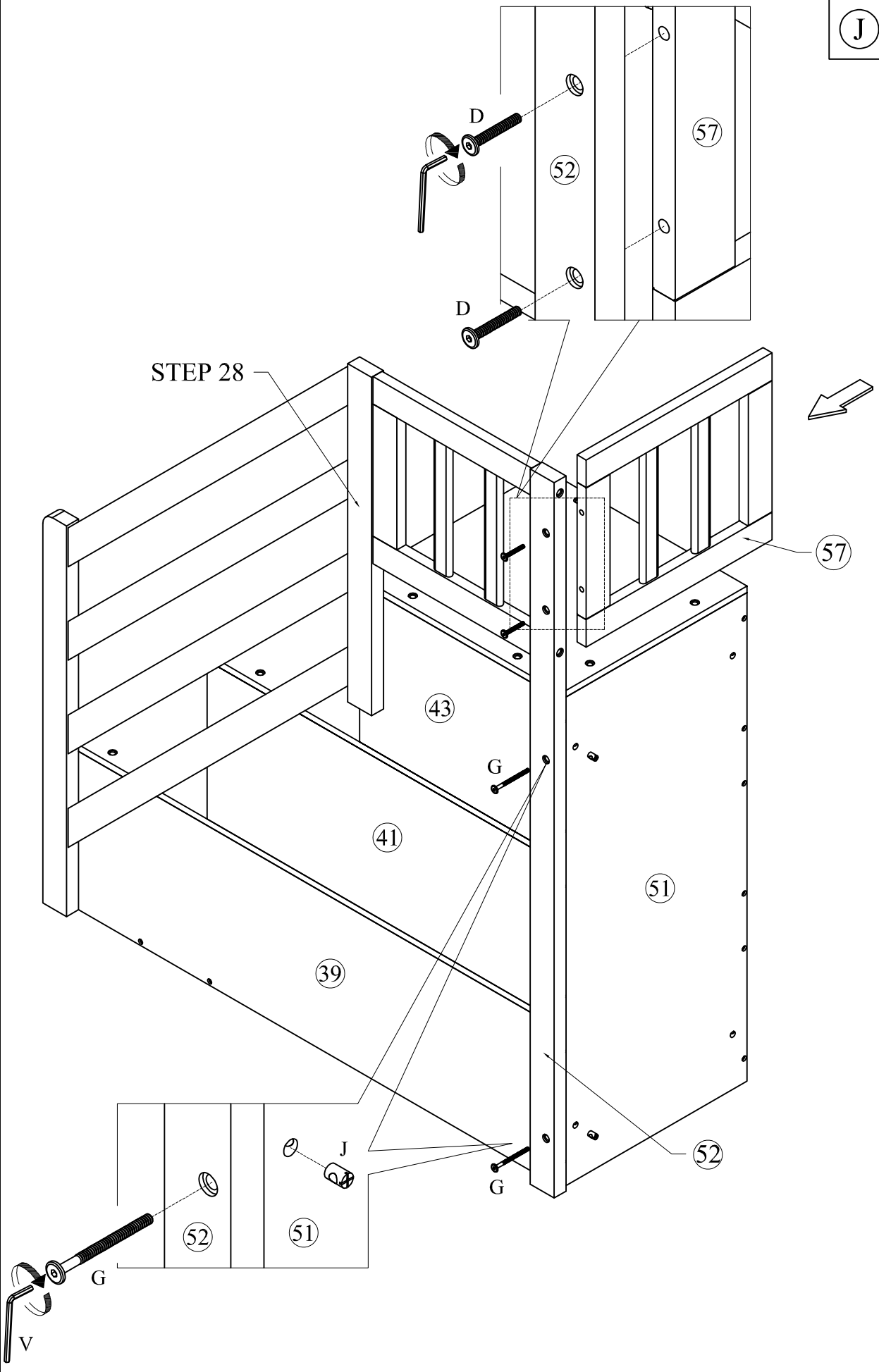

STEP 30

E		02
H	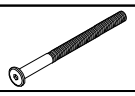	02
J		02

Assemble the box staircase unit onto the bed.

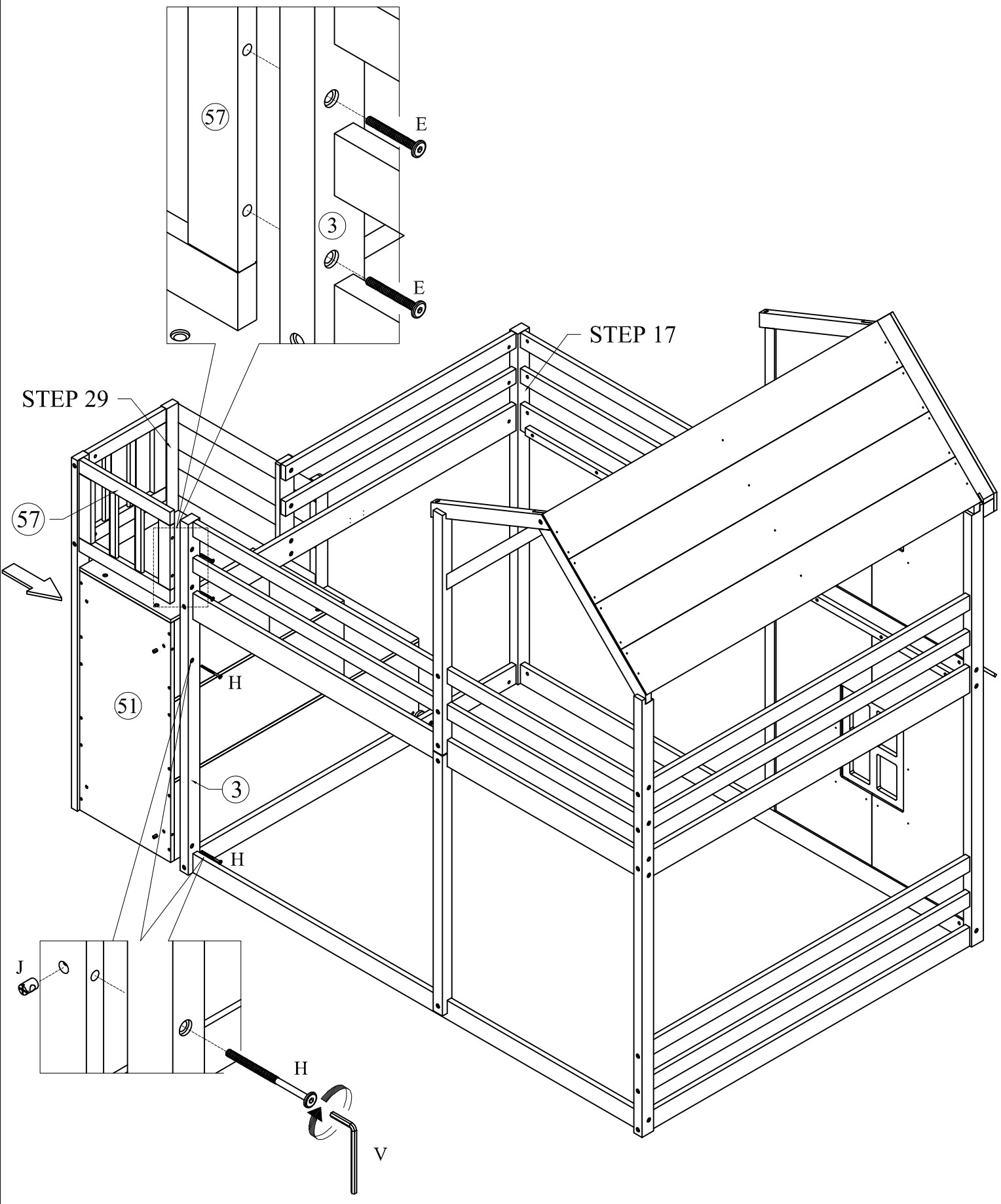

STEP 31

C		01
K		01
T		01

STEP 32

M		12
S		06

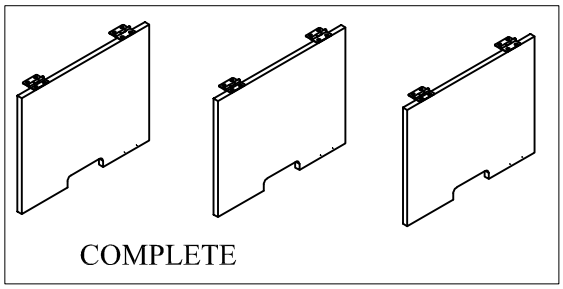

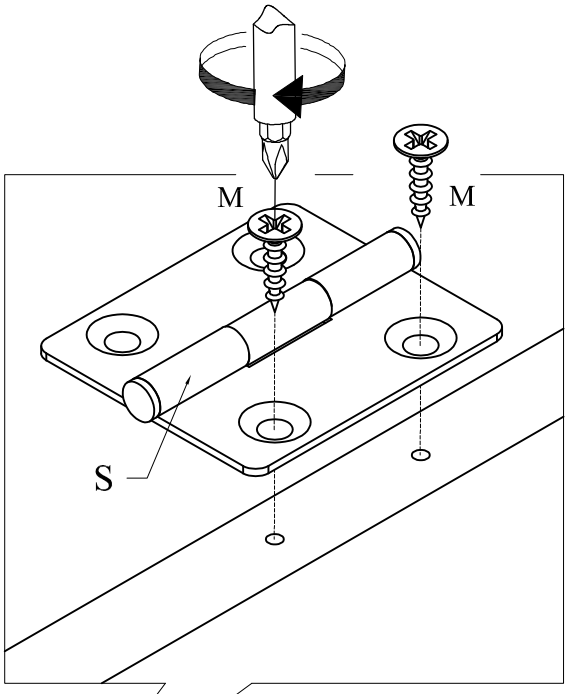

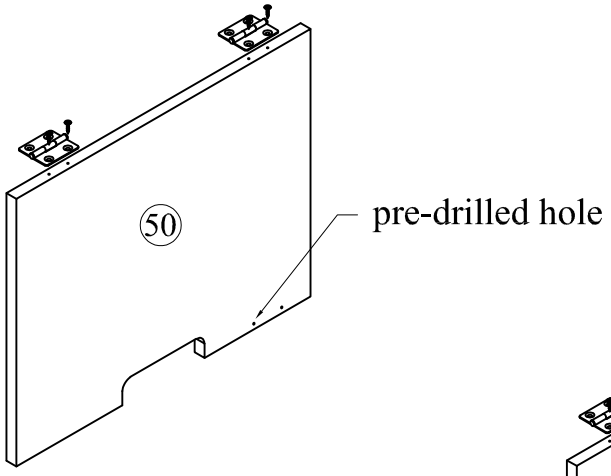

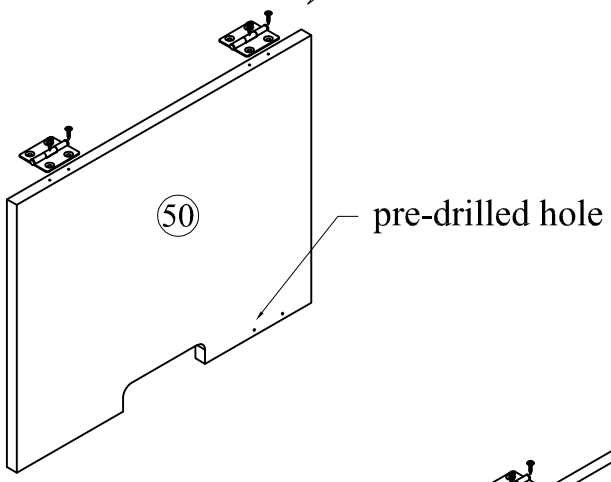

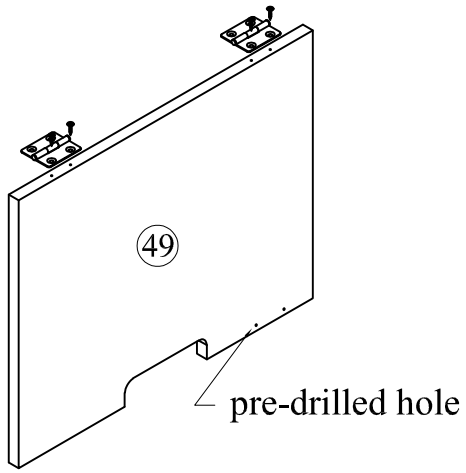

STEP 33

Ⓜ		12

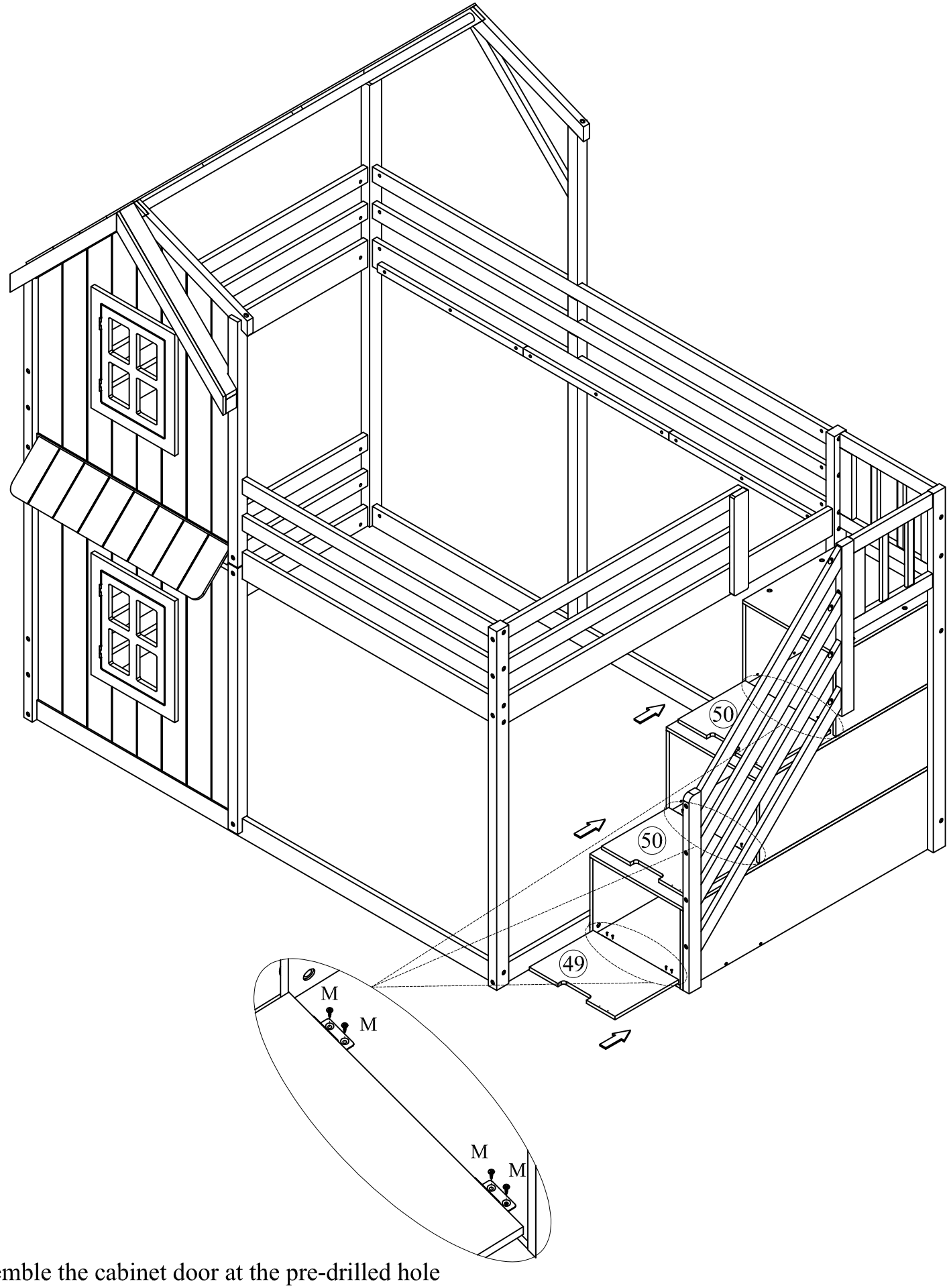

Assemble the cabinet door at the pre-drilled hole locations on parts 45, 46, and 47.

STEP 34

L		06
M	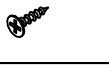	06
R	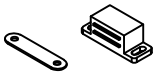	03

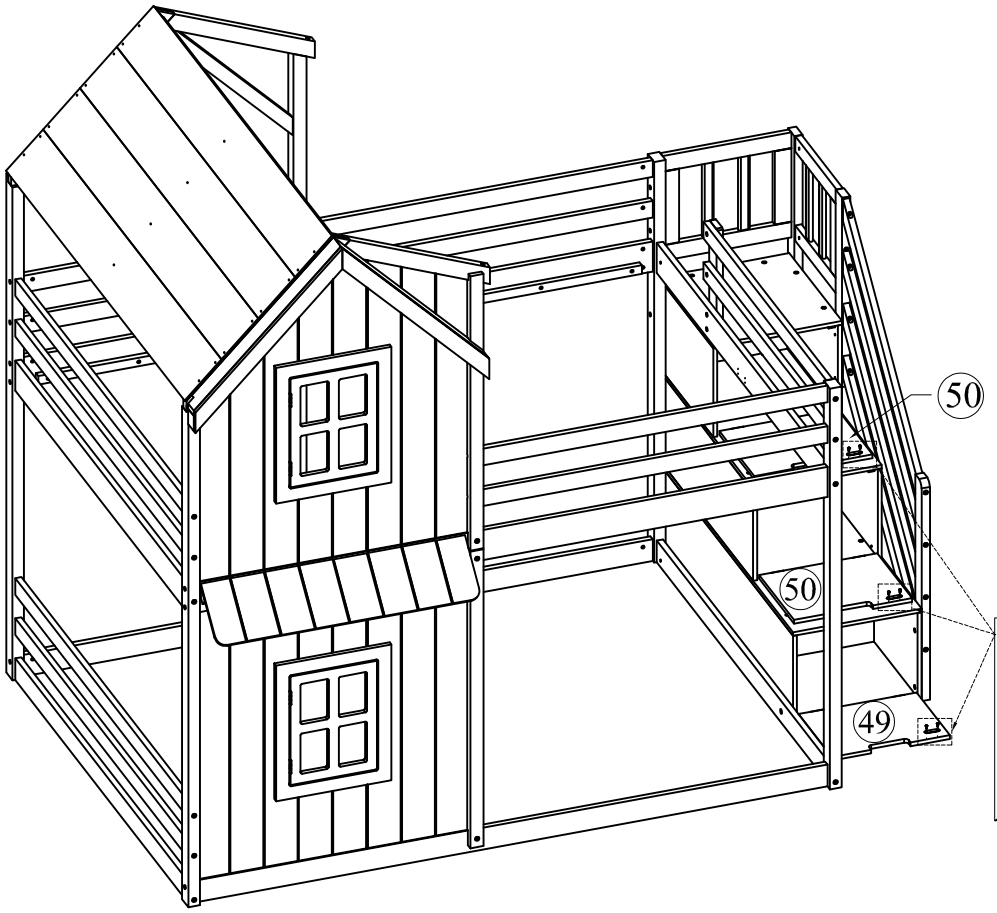

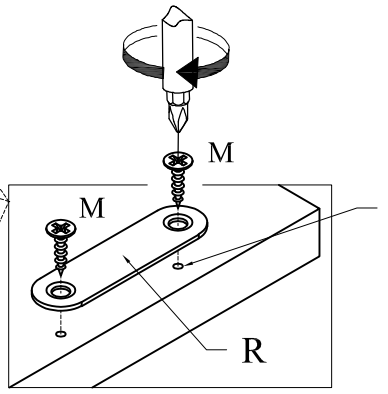



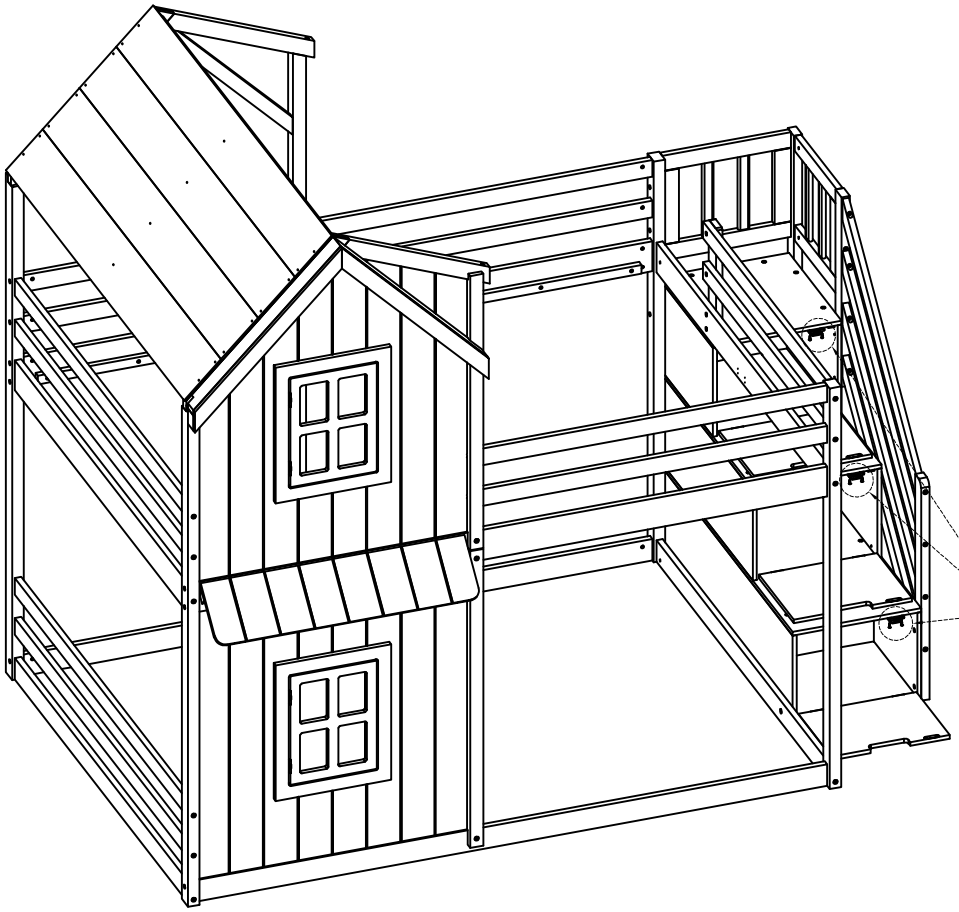

Install the door closers onto the underside of parts 44, 45, and 46 at the pre-drilled hole locations as shown.

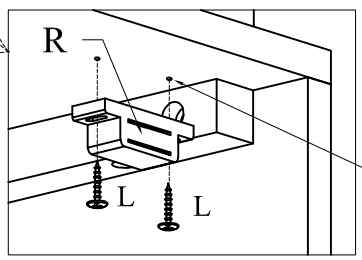

STEP 35

L		08
Q		02

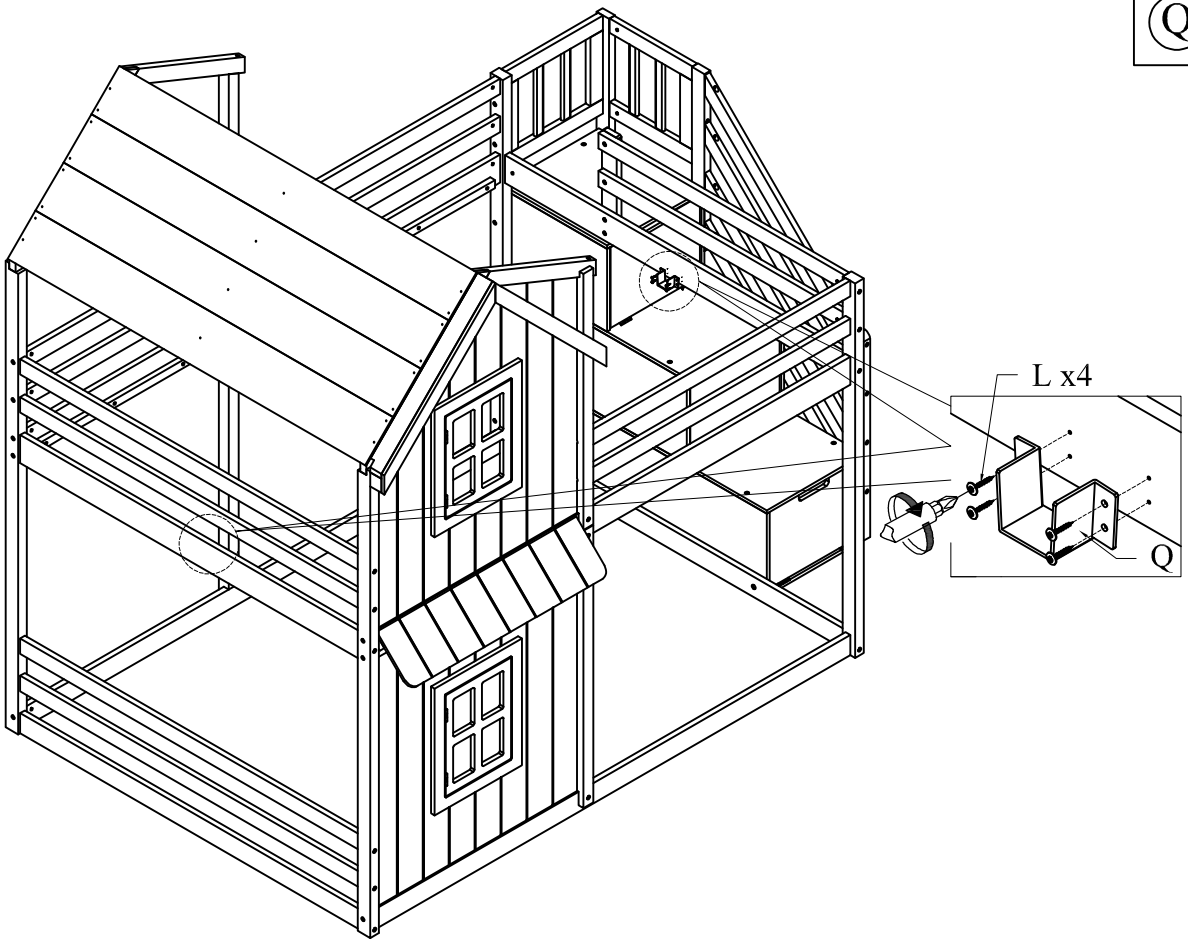

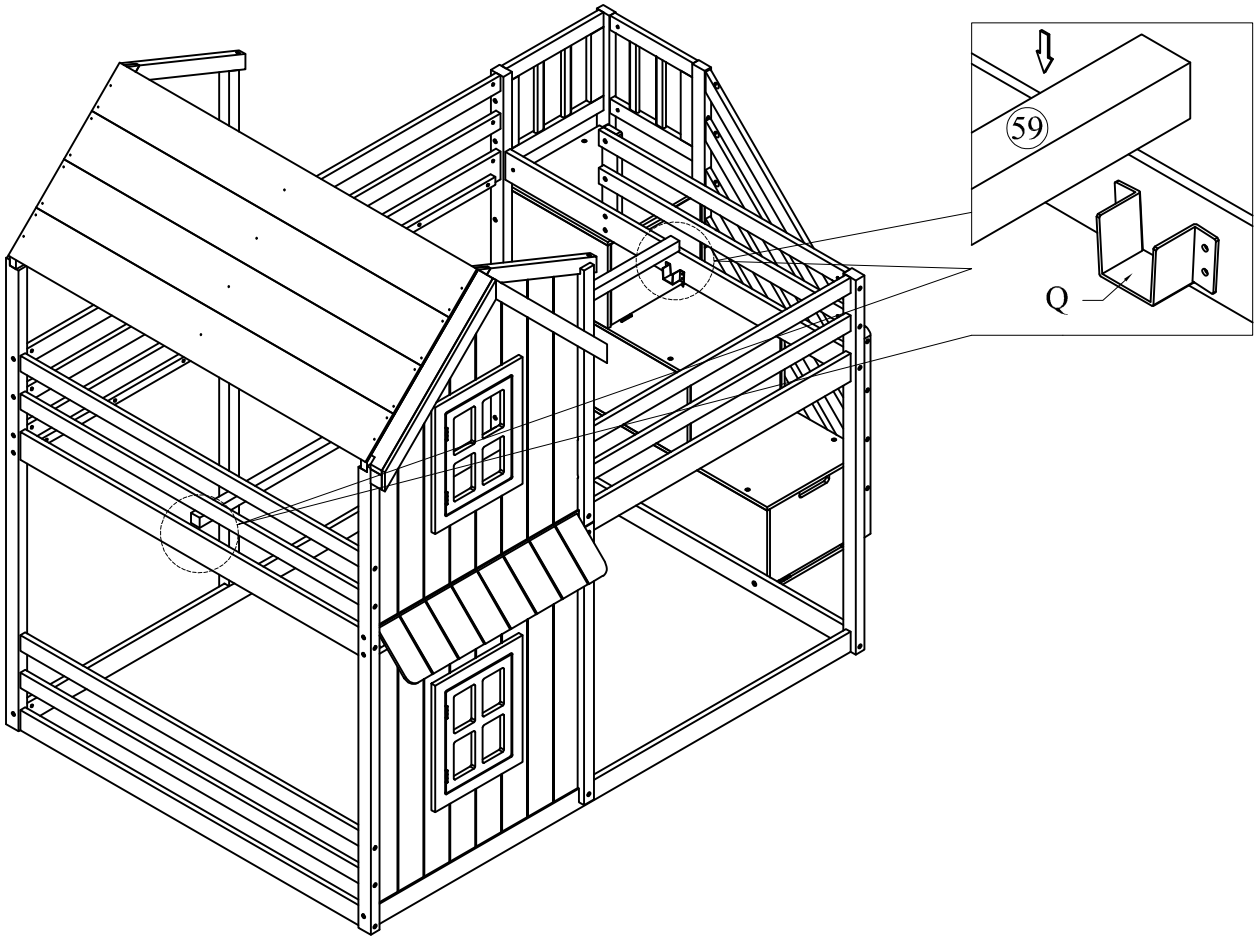

STEP 36

O		42

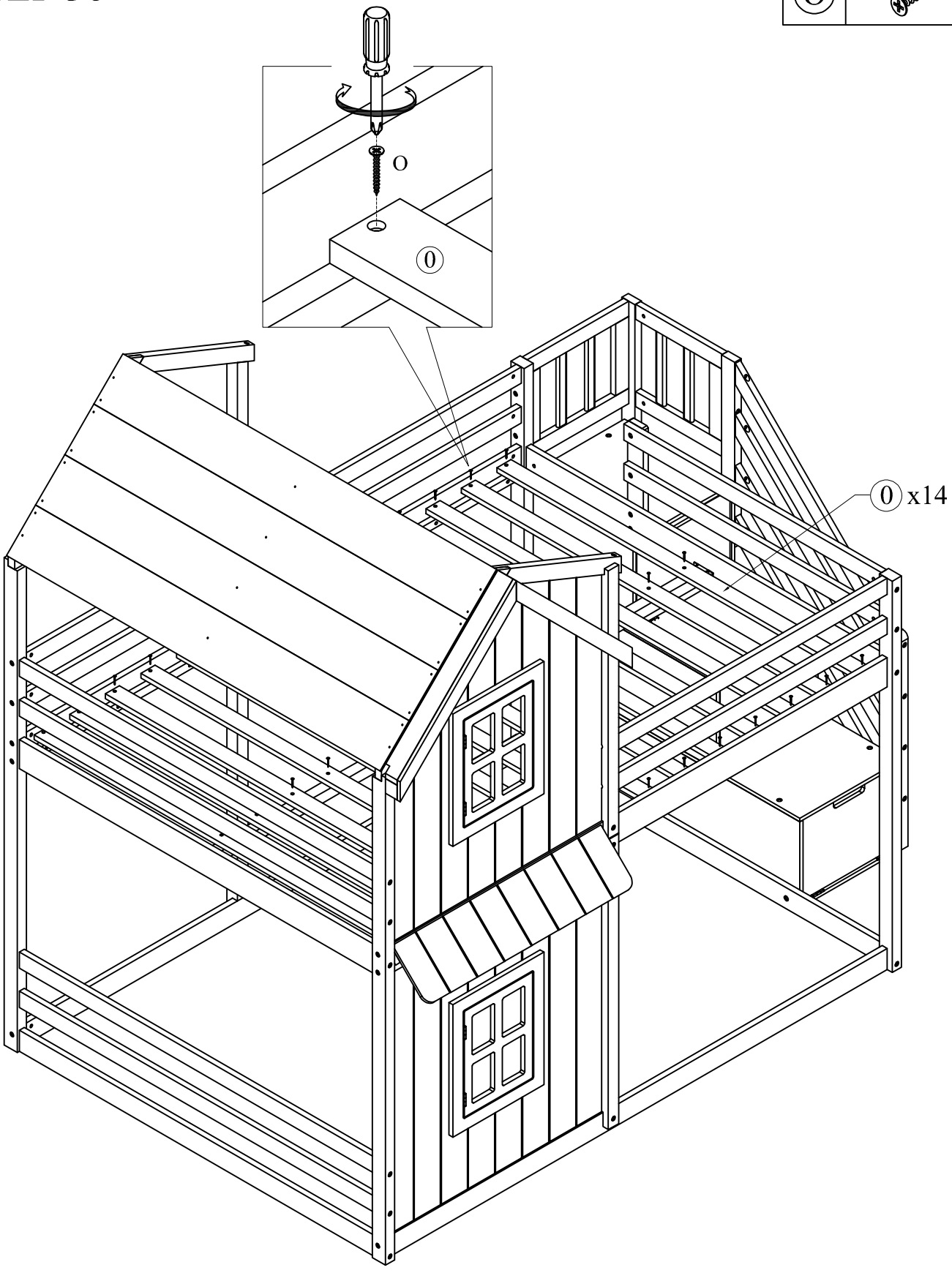

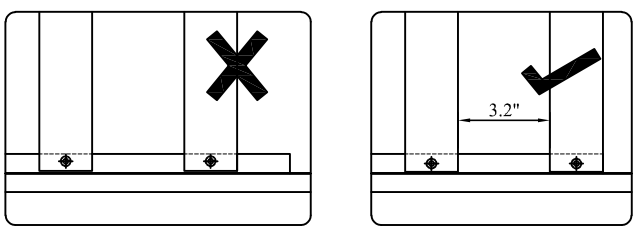

COMPLETED

