ASSEMBLY INSTRUCTION

ITEM NO.:AM-5120-1

NOTE:

·Please retain these instructions for future reference.

·Please read the instruction sheets completely before assembly.

·Remove all parts from carton and ensure all components included prior to assembly.

·lf the chair is smelling,please try to air it for 24-48hours and the smell will go away.

·Sometimes it's because it was packed for a long time,so It's very normal to get that smell.

·Assemble the assembly on a protected surface to avoid scratching the components of chair.

CUSTOMER SERVICES:

·lf you are not entirely satisfied with your purchase, please feel free to contact us using the following steps:

1.Go to Your Orders.

2.Find your order in the list.

3.Select Problem with order

4.Choose your topic from list displayed.

5.Select Contact seller.

ASSEMBLY INSTRUCTION

ITEM NO.:AM-5120-1

KEY	QTY	DESCRIPTION	KEY	QTY	DESCRIPTION
A	1	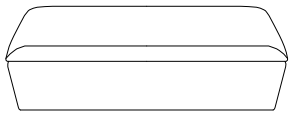	C	8	
			D	8	
B	4	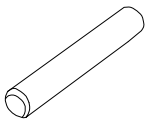	E	4	
			F	1	

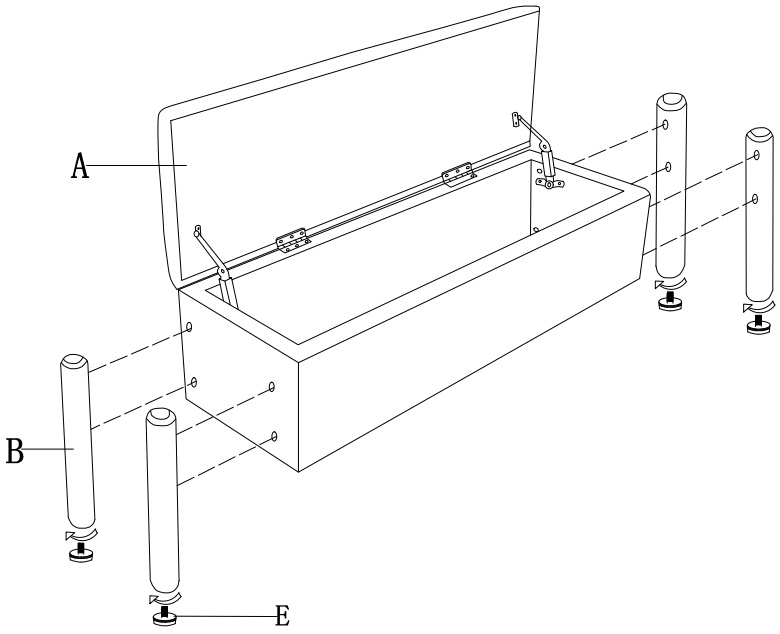

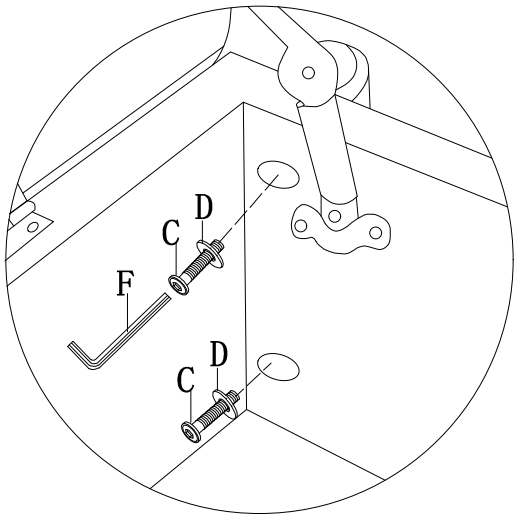

STEP 1

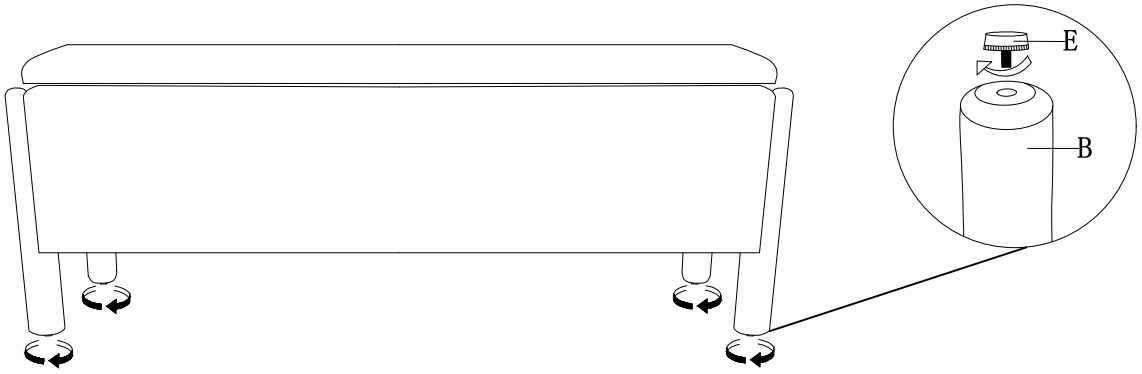

Adjust the chair so that it is leveled,the fully tighten all the screws

STEP 2