Assembly Instructions

Caution : You must read these Assembly Instructions before you proceed

Care & Maintenance



- Not for commercial use. For residential use only.



- Do not put hot items directly on furniture surface.



- Do not clean furniture with harsh cleansers or polish.



- To obtain the longest lifespan of your outdoor products, minimizing exposure to direct sunlight is recommended.



- Children should not climb or jump on the furniture.



- Do not write on furniture without a padded barrier to protect the surface.



- To obtain the longest lifespan of your outdoor products, avoid extended and lengthy exposure to rain, snow, and direct sunshine. Whenever possible cover the product and /or place under patio or awnings.



- Stains may be removed with mild soap solution and damp cloth.



- Dust and pick-up spills using a clean, non-colored, lint-free cloth.

Please look in the Seat Panel for hardware packs.

DAYBED

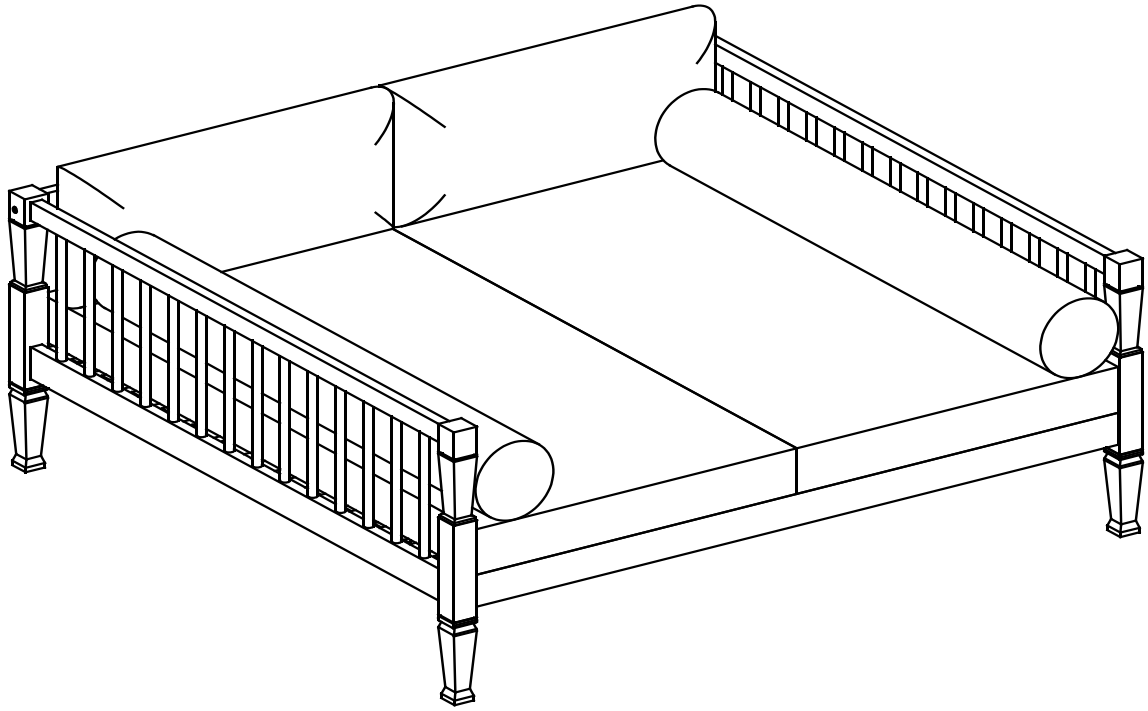

CAUTION: This DayBed is NOT a TOY.
Keep your child / children at bay during the assembly process.
Whenever lifting or moving the Daybed and to prevent any damage to it, two adults may be needed to execute these actions.

Part List

Label	Picture	Description	QTY
A	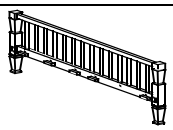	Right Leg Panel	1
B	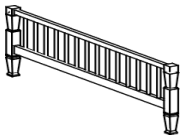	Left Leg Panel	1
C	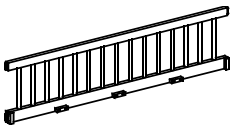	Backrest Panel	1
D		Support Bar	1
E	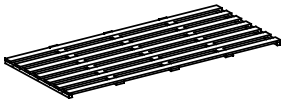	Seat Panel	2
F		Support Seat Panel	3
G		Middle Leg	3
H	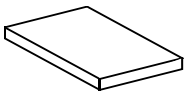	Seat Cushion	2
I	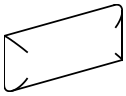	Back Cushion	2
J	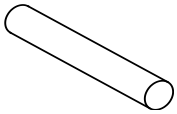	Pillow	2

Hardware

Label	Picture	Description	QTY
①		Bolt (M6x35mm)	9
②		Screw (M6x35mm)	25
③		Screw (M6x90mm)	3
④		Allen Wrench	2

Assembly Preparation

Before Beginning Assembly:

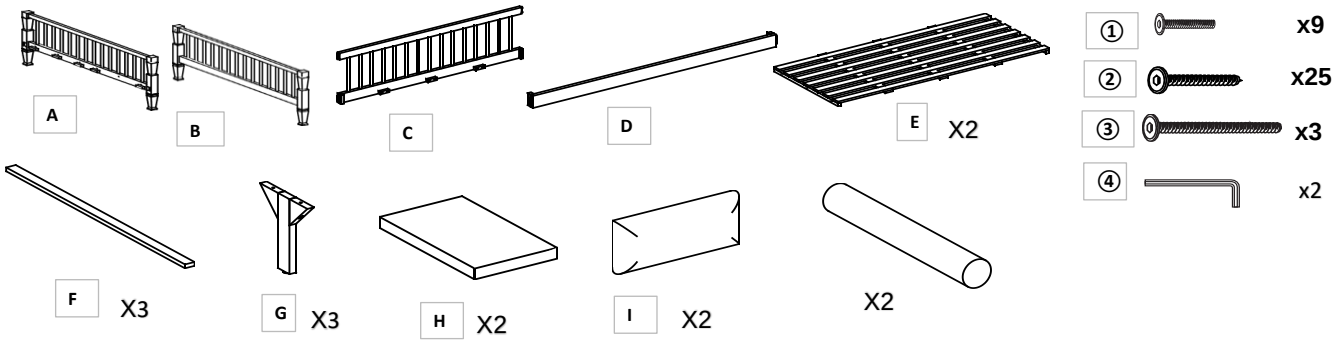

- Read instructions, cover to cover-
- Have 2 adults on hand for assembly-
- Do not assemble on flooring or carpet-
- Assemble on a clean non-marring surface (packing foam)-
- Save all packaging until finished-

Assembly Steps

Overview

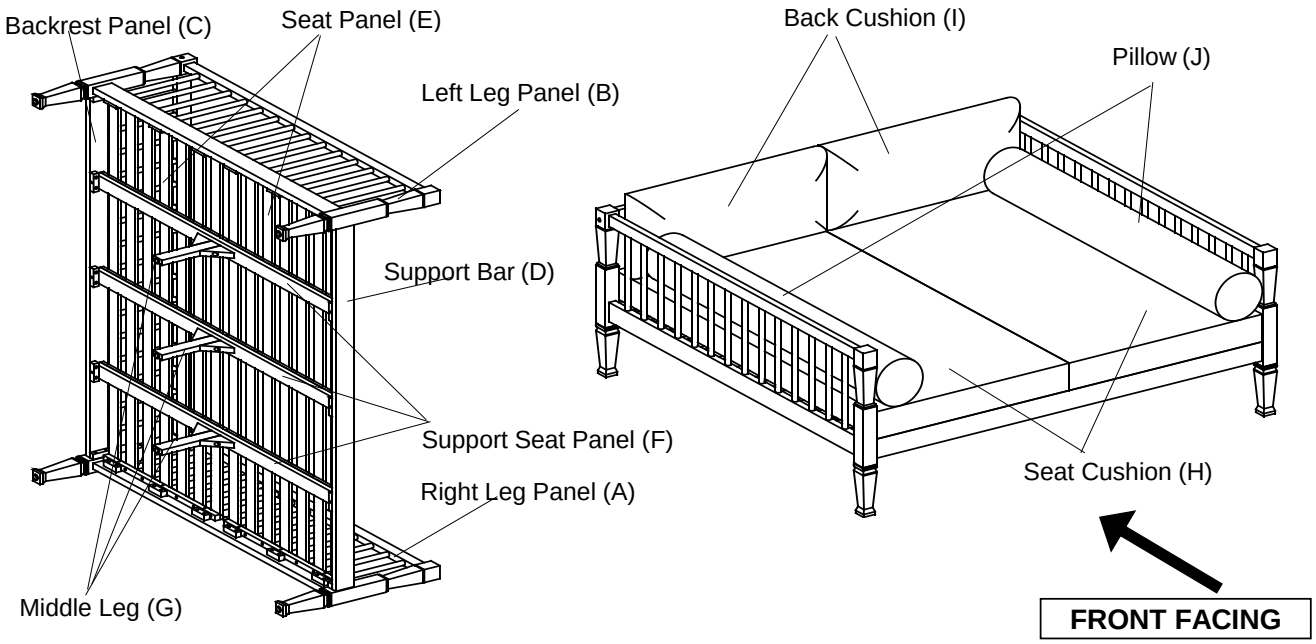

This DayBed has multiple parts and may require up to 60 minutes to assemble. To give you an overview of DayBed parts, the above picture is provided to help you put the various parts into perspective. Please read through the instructions below to familiarise yourself with the parts and steps before assembly.

Step 1

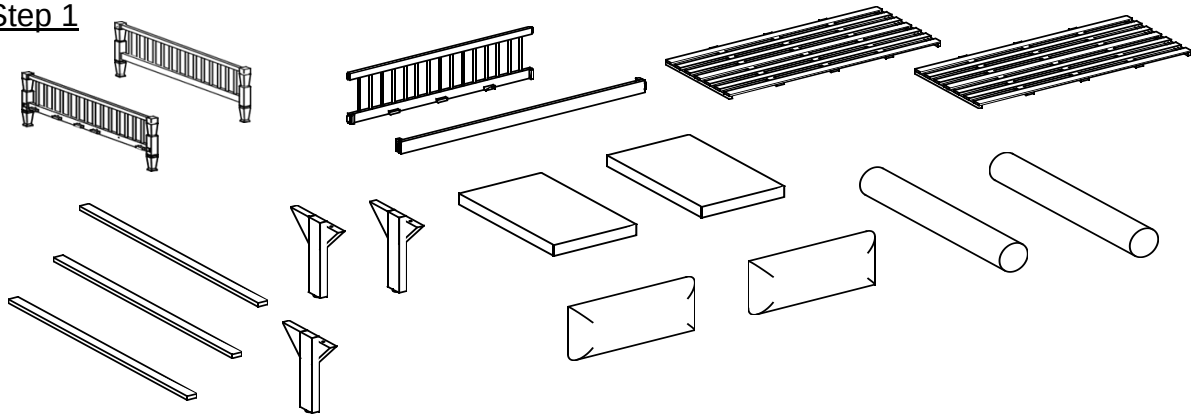

Unpack and place all parts on a clean, non-marring surface.

Step 2

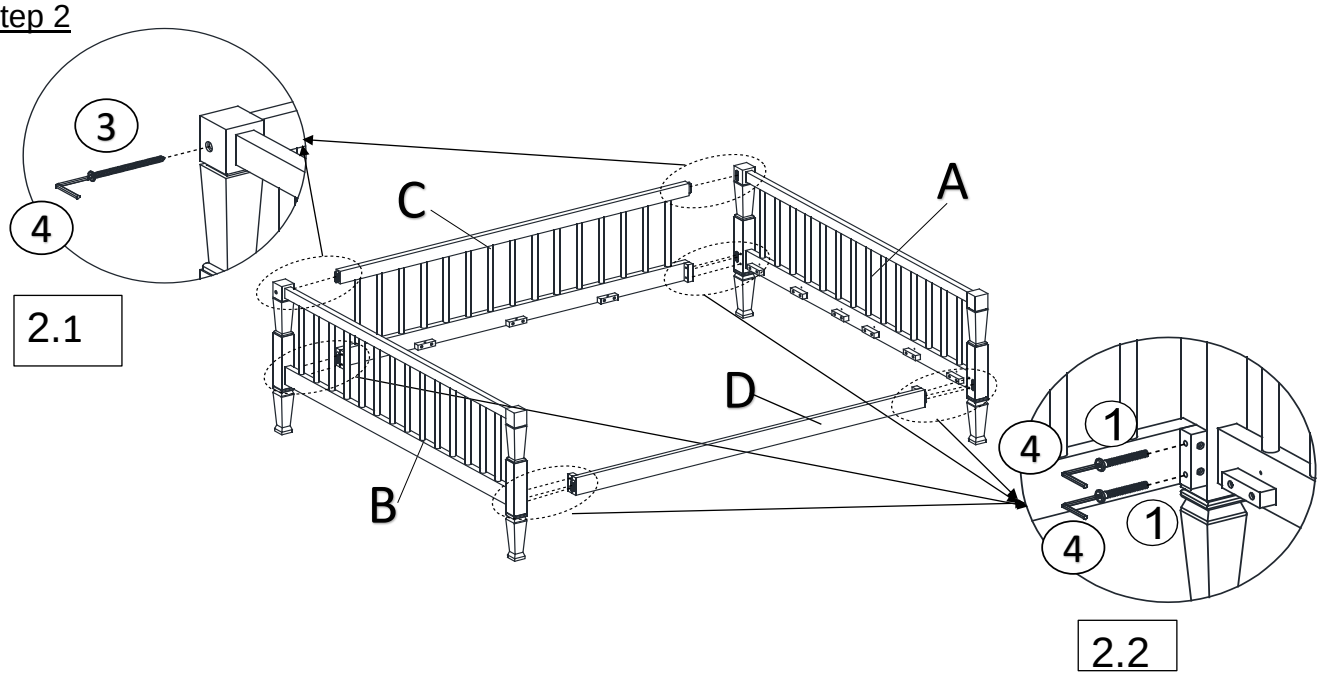

Place the Right Leg Panel (A), the Left Leg Panel (B), the Backrest Panel (C) and the Support Bar (D) as shown in the picture above onto a clean soft surface to avoid any scratches or damage to the product. With assistance from your adult partner(s):
2.1 Attach the Backrest Panel (C) to the Right Leg Panel (A) and the Left Leg Panel (B) by using Screw (③) and Allen Wrench (④) as shown above
2.2 Attach the Support Bar (D) tothe Right Leg Panel (A) and the Left Leg Panel (B) by using Bolt (①) and Allen Wrench (④) as shown above
DO NOT fully tighten the Bolts and Screws at this time.

Step 3

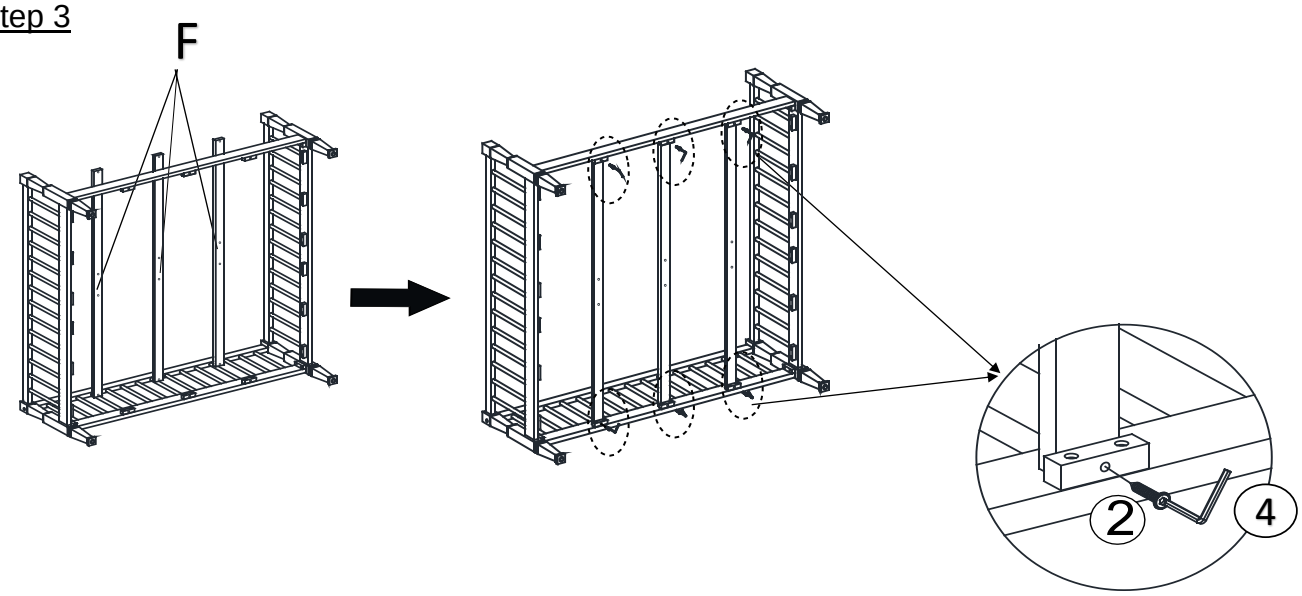

Place the assembled parts from step 2 and the Support Seat Panel (F) on a clean and non-marring surface
Attach the the Support Seat Panel (F) to the assembled parts from step 2 by using Screw (②) and Allen Wrench (④) as shown above
DO NOT fully tighten the Screws at this time.

Step 4

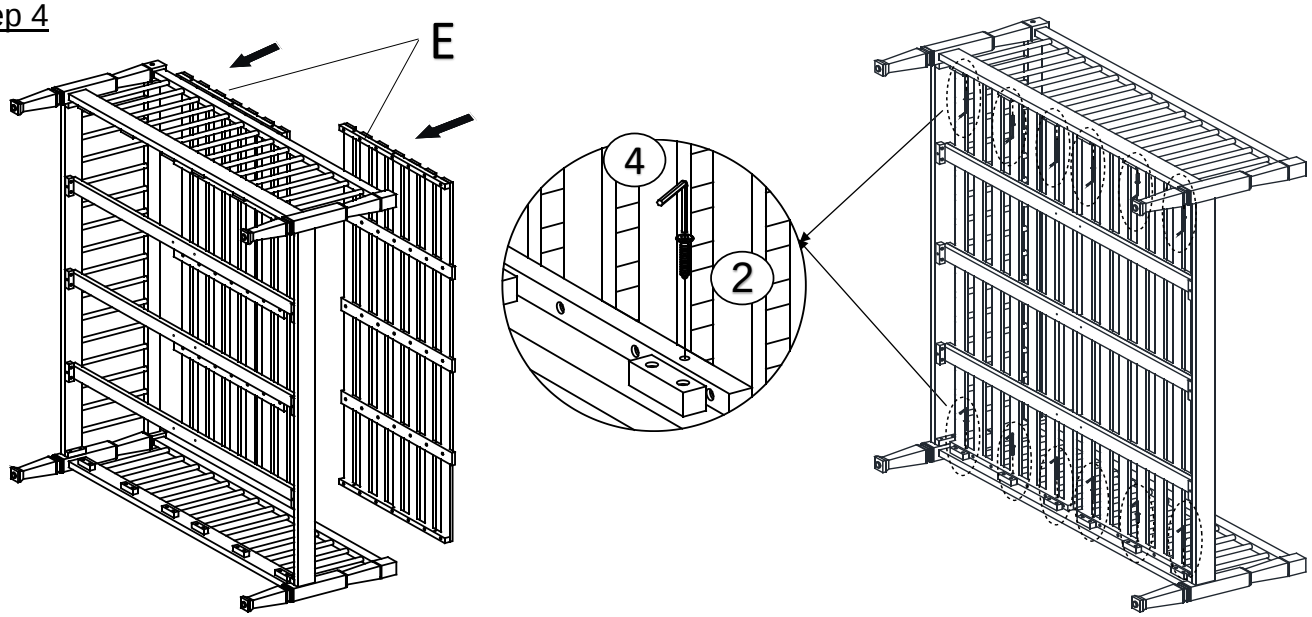

Place the assembled parts from step 3 and the Seat Panel (E) at an angle,as shown above
Attach the Seat Panel (E) to the assembled part in step 3 by using Screw (②) and Allen Wrench (④)
DO NOT fully tighten the Screws at this time.

Step 5

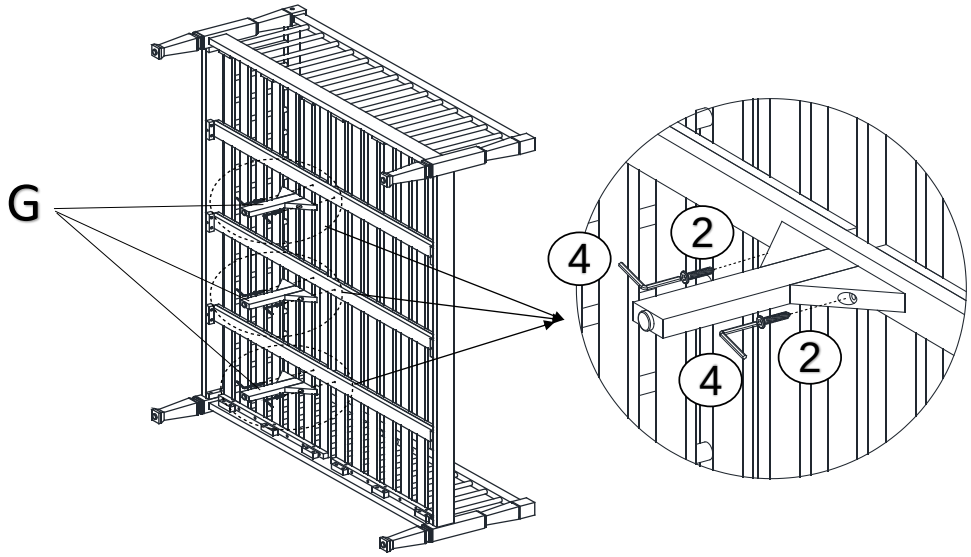

Place the assembled parts in step 4 and the Middle Leg (G) at an angle,as shown above
Attach the Middle Leg (G) to the assembled parts in step 4 by using Screw (②) and Allen Wrench (④) as shown above
DO NOT fully tighten the Screws at this time.

Step 6

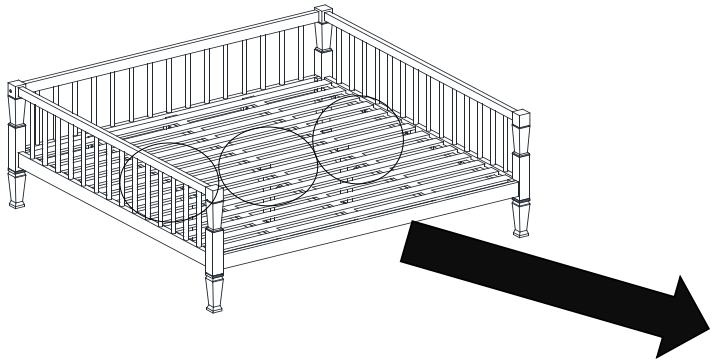

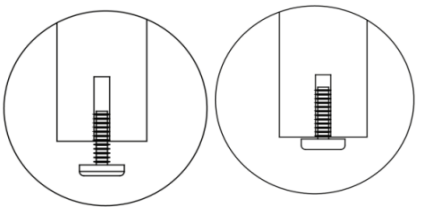

Adjust high for balance Adjust low for balance

Adjust Pre-installed Levelers height for balance

With assistance from your adult partners, Turn the DayBed over.
EXERT pressure, floorwards onto the DayBed with both hands.
This pressure will help the DayBed reach full alignment at all joints.
Check for wobbles.
In a sequential manner, gradually tighten all Bolts at all joints until evenly secured. Inspect DayBed and make sure all part are adequately connect.
CAUTION: When tightening the Bolts tighten sequentially.
DO NOT tighten any Bolt fully and then move towards the next one. This could cause the frame to warp.
If there are still wobbles, loosen the Bolts and execute the same above process. With assistance from your adult partners, adjust the Levelers to the desired height to avoid wobbles.
If the DayBed is not stable, it could lead to damage to the product.

Step 7

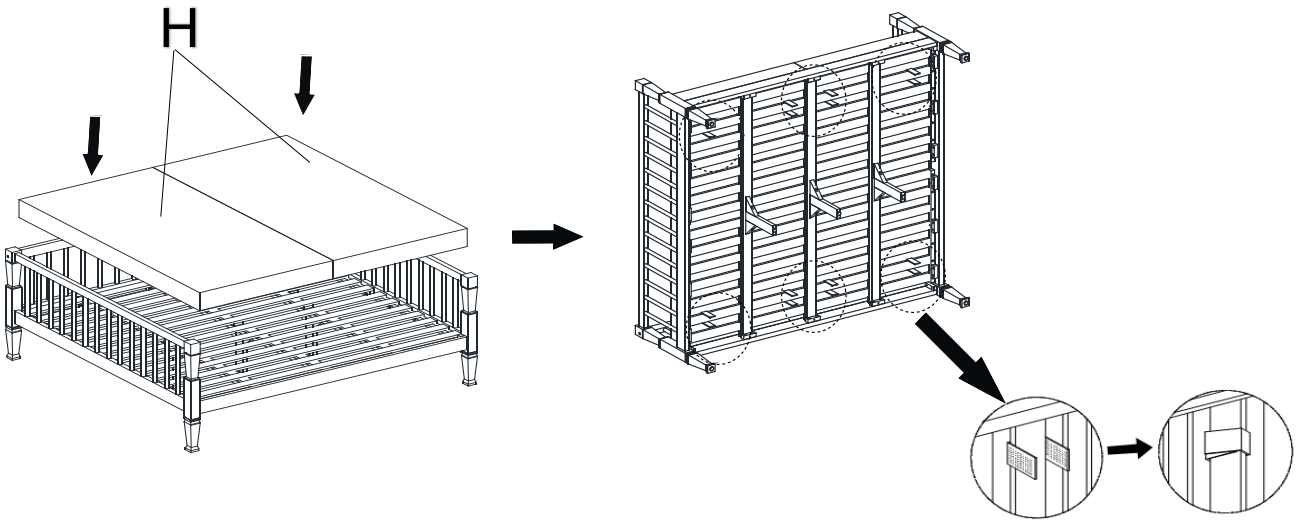

Place the Seat Cushion (H) into the DayBed, then affix the "magic tape straps" around the DayBed as shown above

Step 8

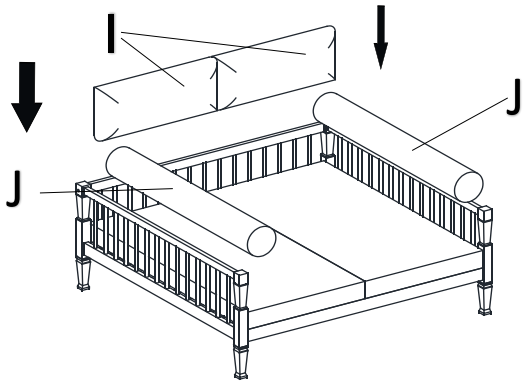

Place the Back Cushion (I) and the Pillow (J) into the DayBed as shown above
Your Daybed is ready to be used.
This Daybed can only be used on a flat, level surface.

Questions & Answers about Proposition 65

• What is Proposition 65?

Proposition 65 requires businesses to provide warnings to Californians about significant exposures to chemicals that cause cancer, birth defects or other reproductive harm. These chemicals can be in the products that Californians purchase, in their homes or workplaces, or that are released into the environment. By requiring that this information be provided, Proposition 65 enables Californians to make informed decisions about their exposures to these chemicals.

Proposition 65 also prohibits California businesses from knowingly discharging significant amounts of listed chemicals into sources of drinking water.

Proposition 65 requires California to publish a list of chemicals known to cause cancer, birth defects or other reproductive harm. This list, which must be updated at least once a year, has grown to include approximately 900 chemicals since it was first published in 1987.

• What types of chemicals are on the Proposition 65 list?

The list contains a wide range of naturally occurring and synthetic chemicals that include additives or ingredients in pesticides, common household products, food, drugs, dyes, or solvents. Listed chemicals may also be used in manufacturing and construction, or they may be byproducts of chemical processes, such as motor vehicle exhaust.

• What does a warning mean?

If a warning is placed on a product label or posted or distributed at a workplace, a business, or in rental housing, the business issuing the warning is aware or believes that it is exposing individuals to one or more listed chemicals.

By law, a warning must be given for listed chemicals unless the exposure is low enough to pose no significant risk of cancer or is significantly below levels observed to cause birth defects or other reproductive harm.

• Where can I get more information on Proposition 65?

If you have specific questions on the administration or implementation of Proposition 65, you can contact OEHHA's Proposition 65 program at P65.Questions@oehha.ca.gov, or by phone at (916) 445-6900.