# Electric Height Adjustable Desk
# Installation and User Manual

## HKOFDK031WH

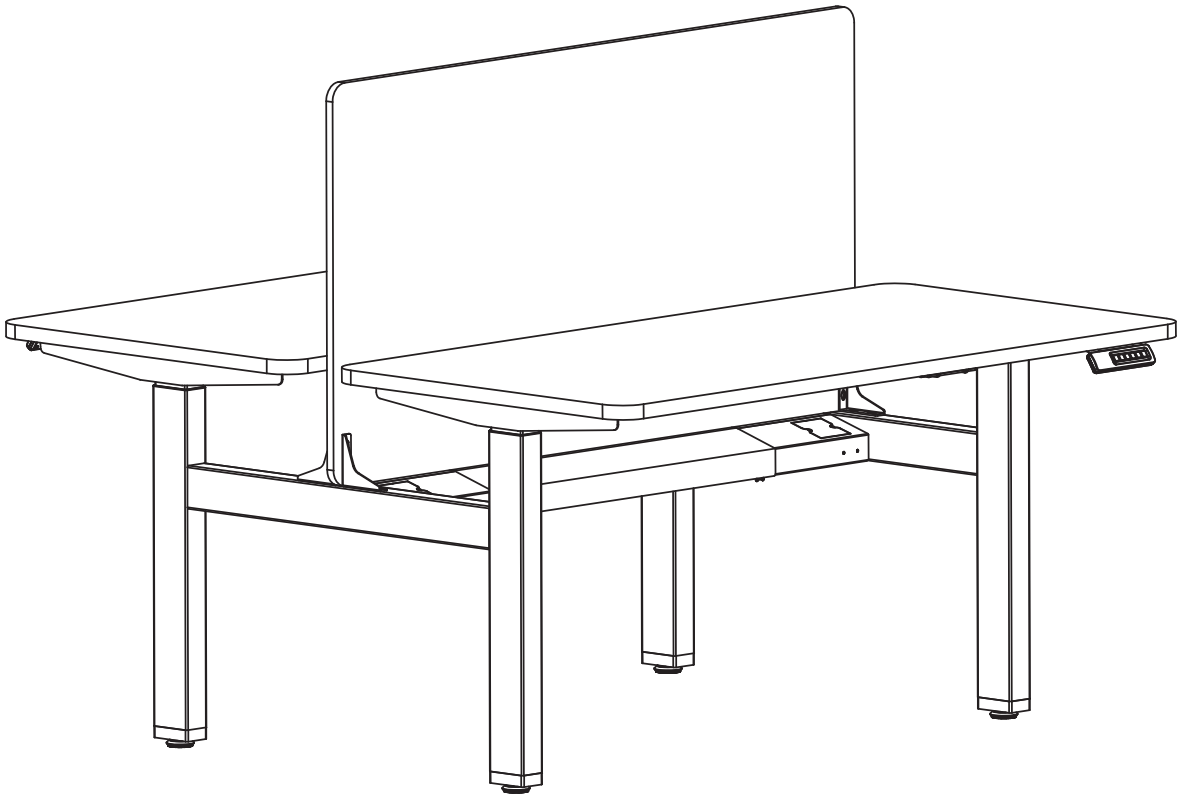

# WARNING

Keep children and pets away from the desk while it is lifting or lowering. Unplug the power cord during thunderstorms or when the product will not be used for a long time.

Ensure the desktop does not touch any walls. Clear all obstructions during operation; no objects taller than 500 mm shall be placed under the desk.

Operating ambient temperature: 0°C–40°C. Keep the product away from corrosive gas, liquid and dusty materials.

Do not disassemble the product without authorization, to avoid equipment malfunction and electric injury.

Though the desk is equipped with an anti-collision function, keep your hands and all other body parts out of the moving path to prevent accidental injury. This function will NOT activate during manual reset.

Read the operation manual thoroughly before use. Our company shall not be liable for any product damage or personal injury caused by improper operation.

Manual reset is required before operation for first use or after power cut-off.

# EXPLODED VIEW

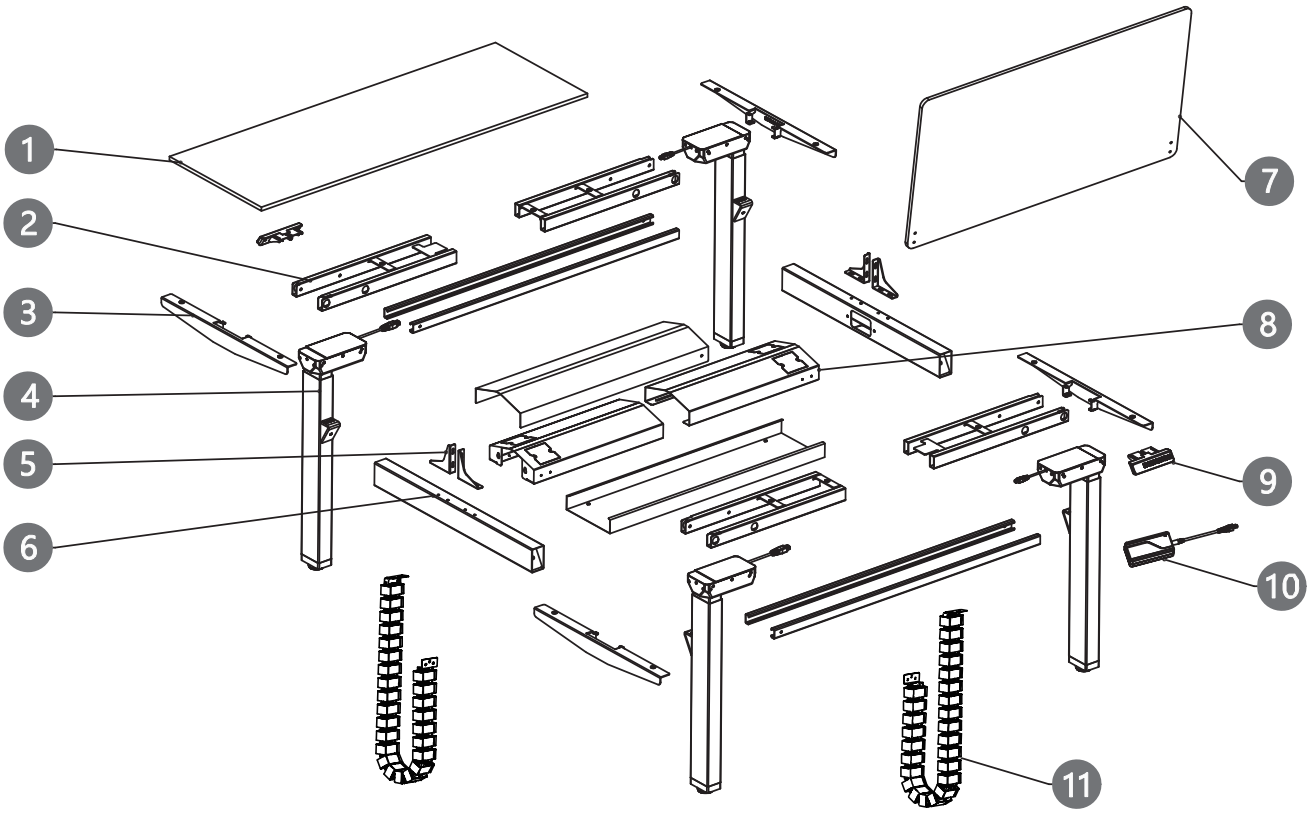


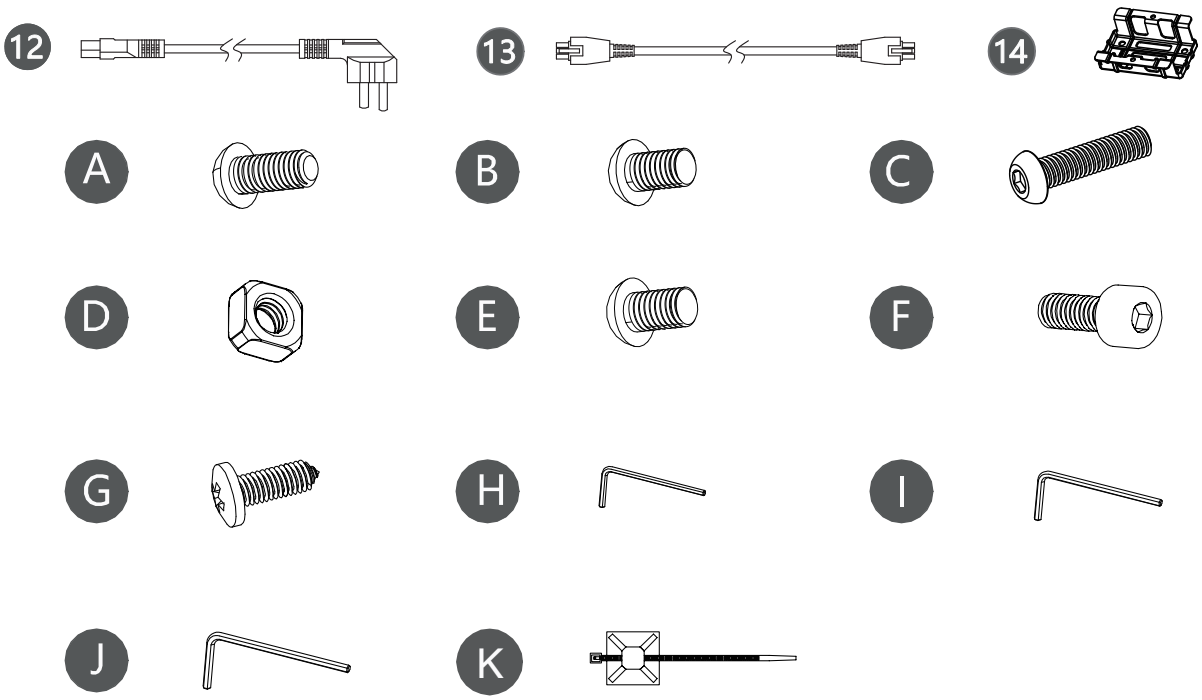


BOX A：1(one piece)、2(one piece)、3(two piece)、4(two piece)、6(one piece)、7(one piece)、9(one piece)、10(one piece)、11(one piece)、12(one piece)、13(two piece)、14(one piece)、A−K

BOX B：1(one piece)、2(one piece)、3(two piece)、4(two piece)、6(one piece)、9(one piece)、10(one piece)、11(one piece)、12(one piece)、13(two piece)、14(one piece)

BOX C：5(four piece)、8(one piece)

# PARTS LIST

| NO. | PART NAME | PCS |
|---|---|---|
| 1 | Tabletop | 2 |
| 2 | Framework Component | 2 |
| 3 | Side Panel | 4 |
| 4 | Post Left/Right | 4 |
| 5 | Screen Clip | 4 |
| 6 | Beam | 2 |
| 7 | Partition Screen | 1 |
| 8 | Cable Trunking Component | 1 |
| 9 | Hand Controller | 2 |
| 10 | Adapter | 2 |
| 11 | Umbilical Riser | 2 |
| 12 | Power Cord | 2 |
| 13 | Adapter Cable | 4 |
| 14 | Adapter Mount | 2 |

| NO. | PART NAME | PCS |
|---|---|---|
| A | M6×14 Hexagon Socket Round Head Screw | 22 |
| B | M6×10 Hexagon Socket Button Head Screw | 44 |
| C | M6×30 Hexagon Socket Head Screw | 4 |
| D | M6 Hex Nut | 4 |
| E | M8×12 Hexagon Socket Button Head Screw | 4 |
| F | M4×10 Wing Screw | 4 |
| G | ST5×16 Large Flange Head Self-Tapping Screw | 12 |
| H | M3 Hex Wrench | 1 |
| I | M4 Hex Wrench | 1 |
| J | M5 Hex Wrench | 1 |
| K | Cable Clip | 20 |

# YOU MAY NEED (NOT SUPPLIED)

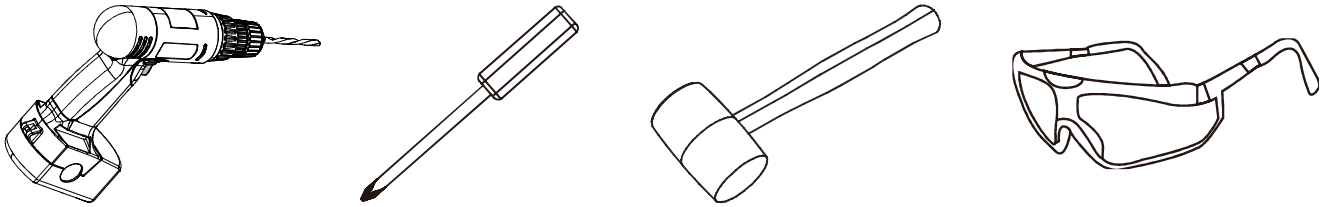

**1**

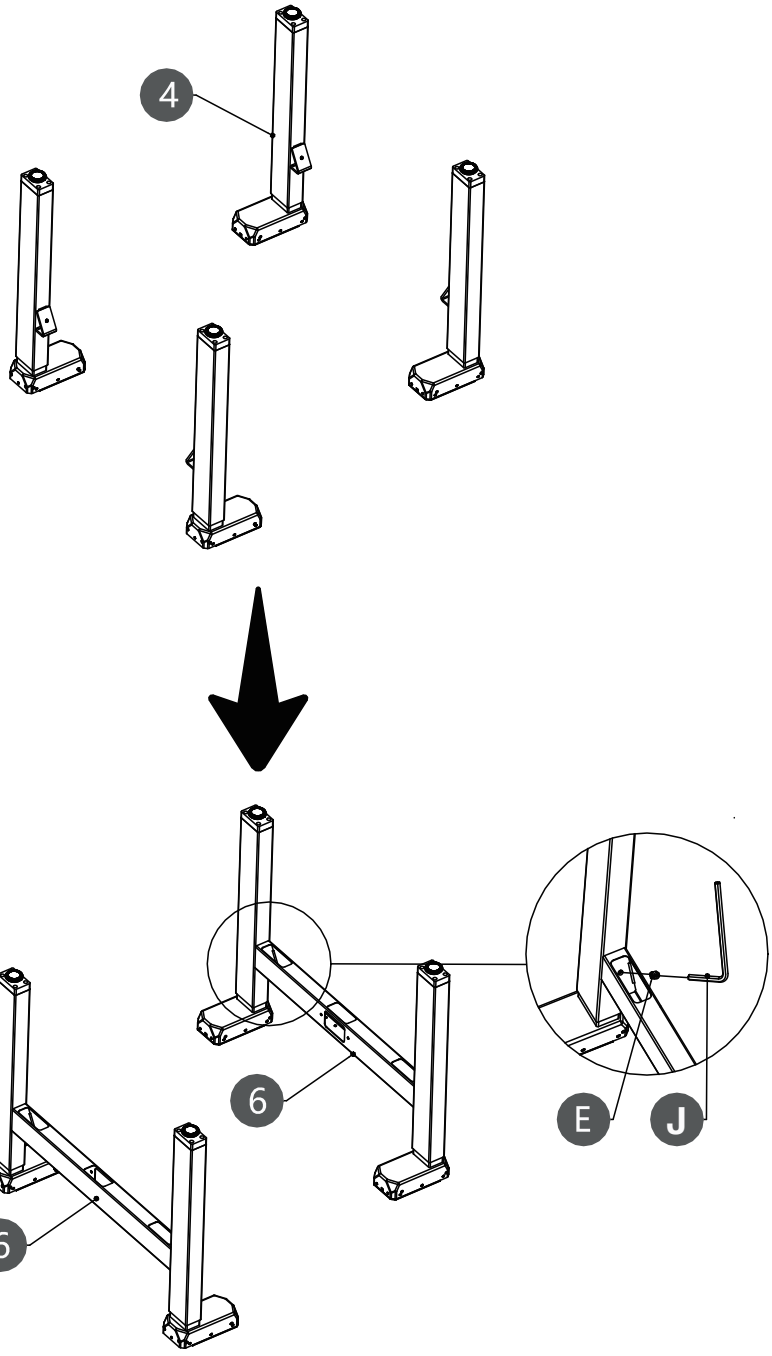


As shown in the figure, prepare the Left and Right Posts (4).
As illustrated, use the M5 Allen Key (J) to assemble the Crossbeam (6) with four pieces of M8×12 Socket Button Head Screws (E).

# 2

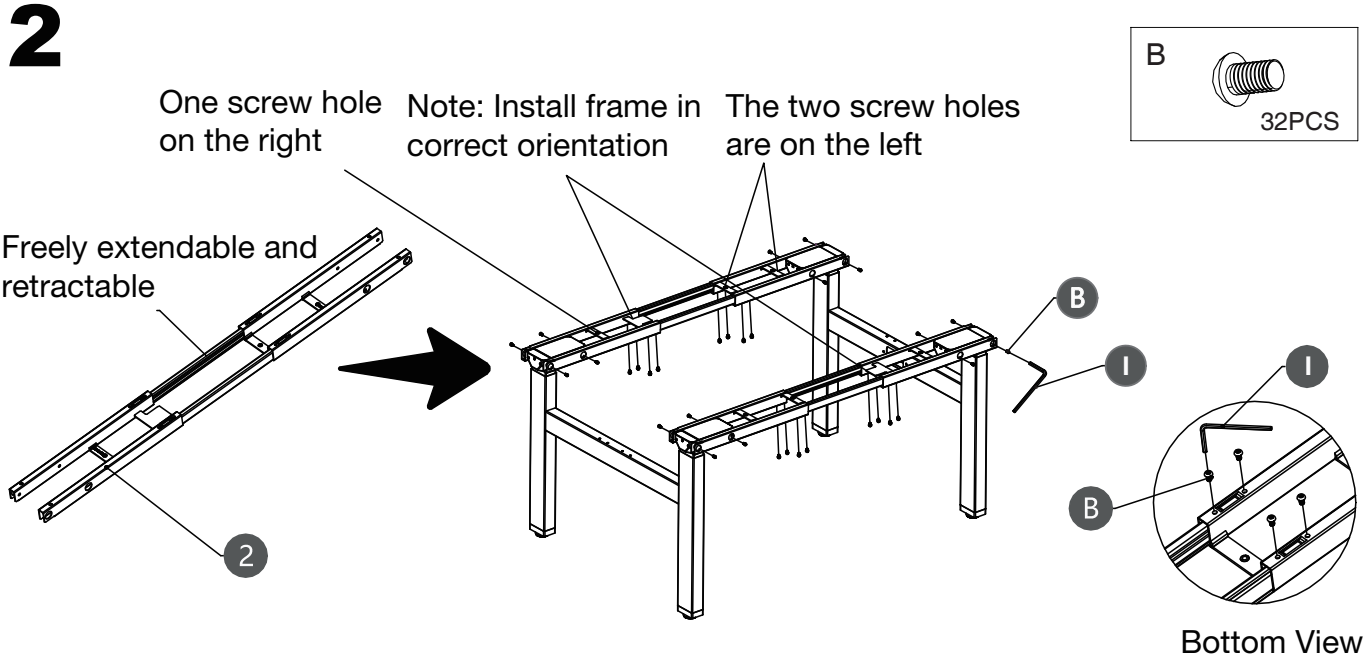


As shown in the figure, use the M4 Allen Key (I) to fasten the Frame (2) to the post base boxes with 4 pcs of M6×10 Socket Button Head Screws (B) (16 pcs in total). Adjust the frame to the required length according to the mounting holes of the desktop. Tighten the frame at the bottom with another 4 pcs of M6×10 Socket Button Head Screws (B) (16 pcs in total).

# 3

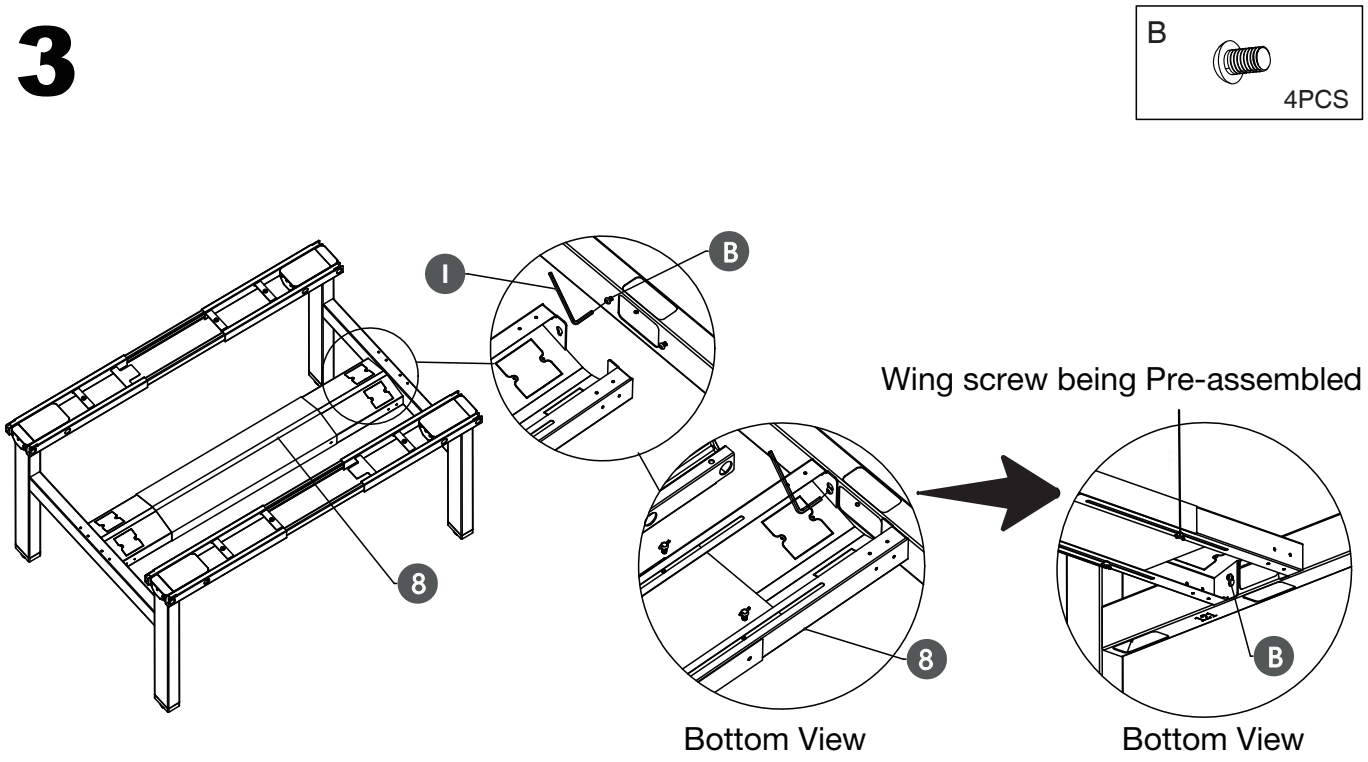


Use M4 wrench (I) to pre-assemble four pieces of M6×10 screws (B) onto the cross beam, leaving a 2 mm clearance. Hang the wire duct main body (8) on the cross beam screws, then fully tighten the M6×10 screws (B). Stretch the telescopic wire duct to a suitable length matching the cross beam, and tighten the four pre-installed wing screws.

# 4

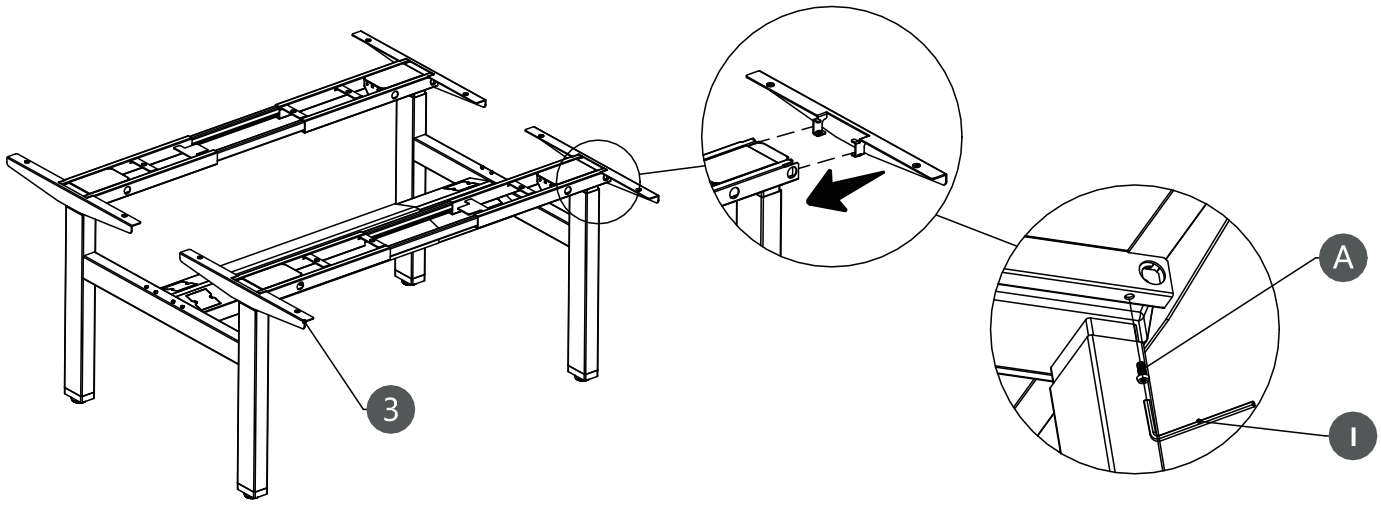


As shown in the figure, raise the upright columns. Insert the side panels (3) into the frame respectively as illustrated. Use an M4 wrench (I) to fasten the side panels to the frame with eight M6×14 screws (A).

# 5

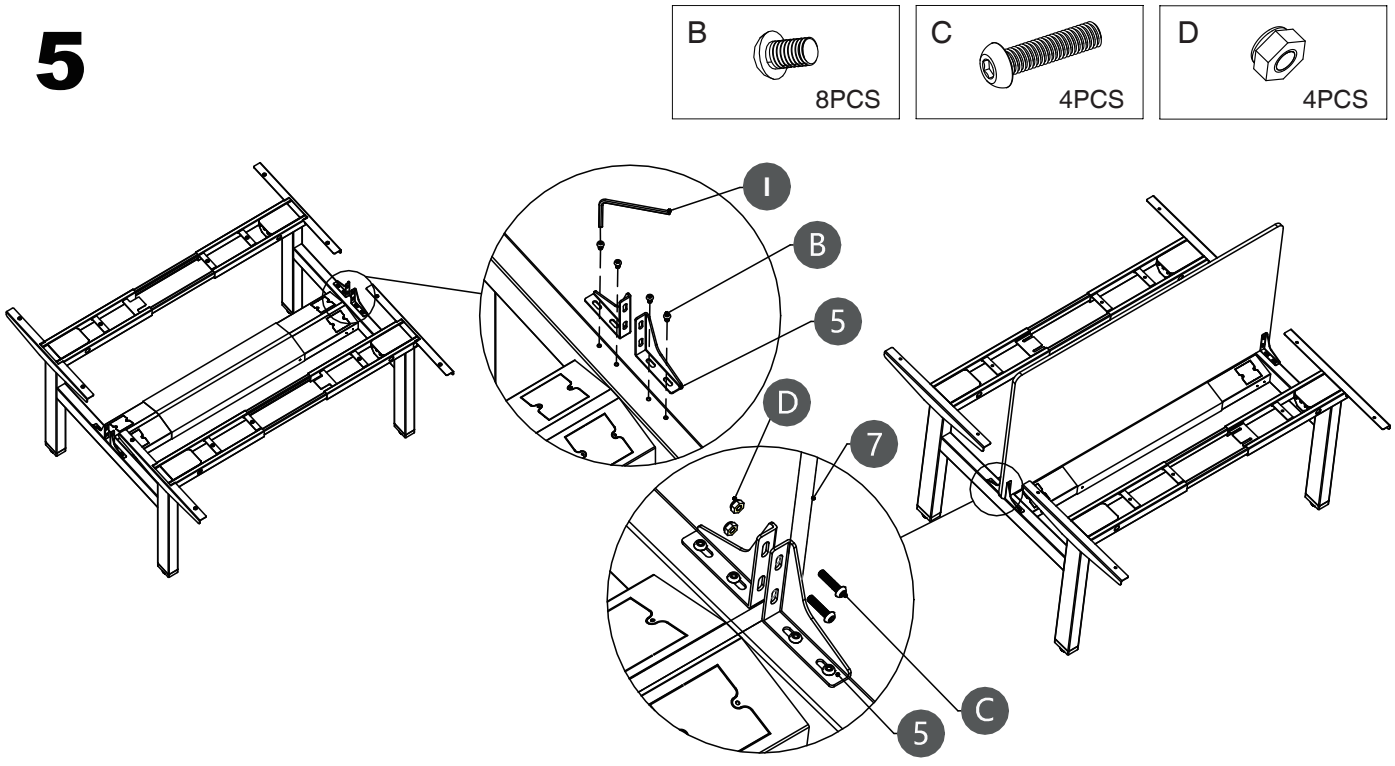


Place the screen clamps (5) at the corresponding positions on the cross beam as shown in the figure. Tighten with M6×10 screws (B) using M4 wrench (I). Fasten the screen clamps (5) to the partition screen (7) with M6×30 screws (C) and M6 nuts (D).

# 6

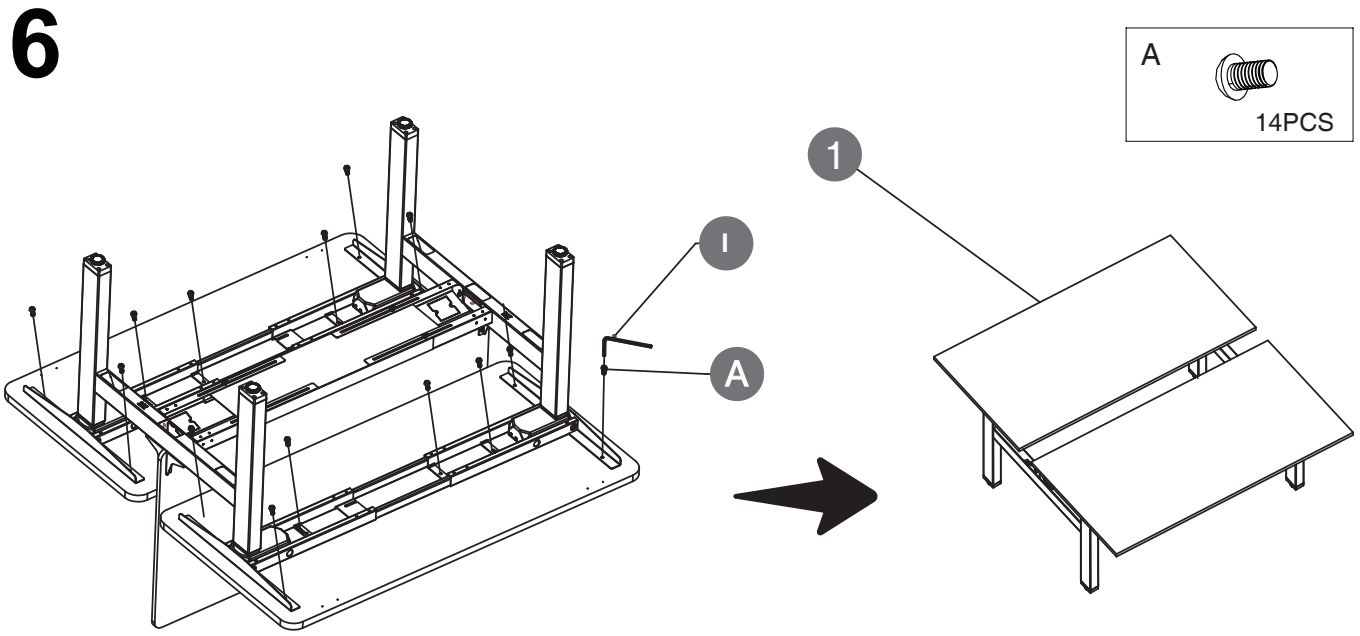


As shown in the figure, place the tabletop onto the table frame and align the mounting holes with the holes on the frame. Use an M4 wrench (I) to fasten the tabletop to the table frame with a total of fourteen M6×14 screws (A).

# 7

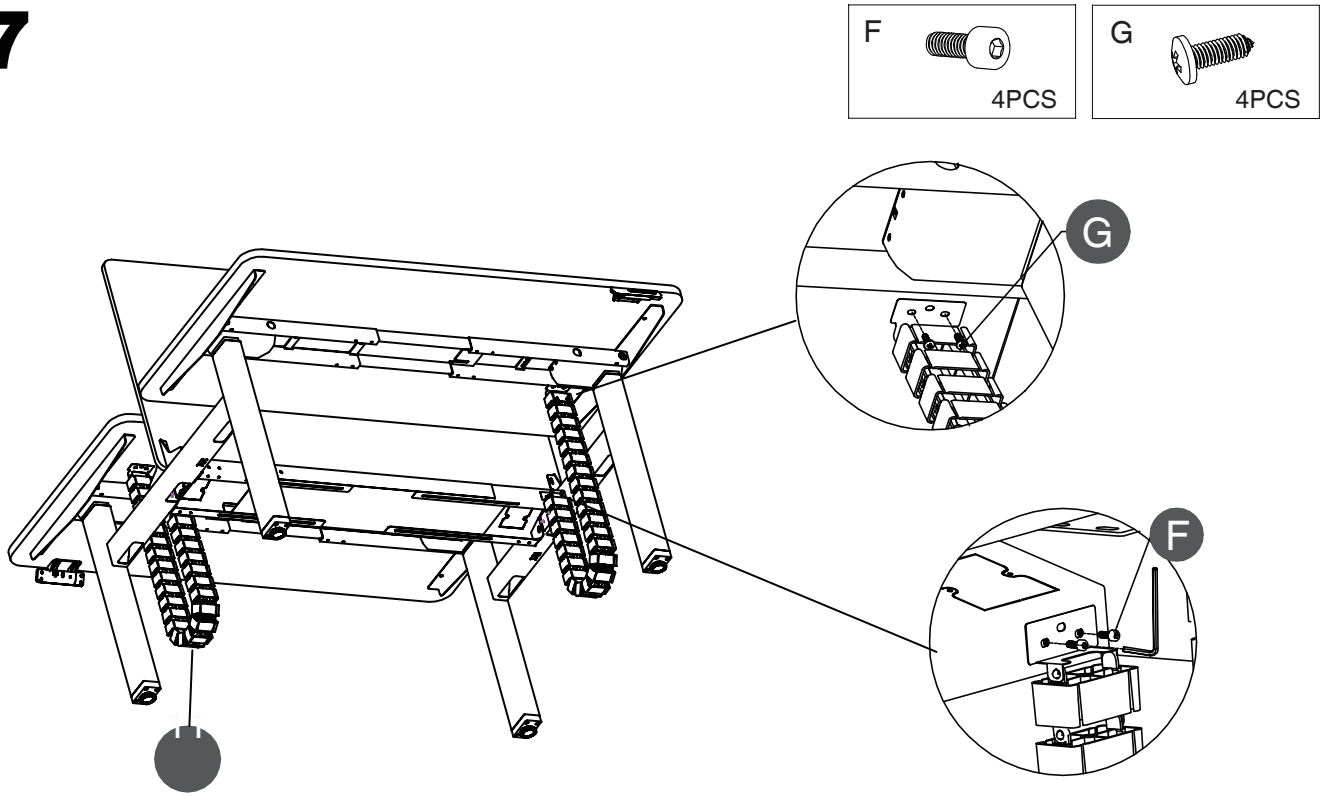


As shown in the figure, secure the umbilical riser tube to the cable trough with two M4×10 screws (F) using an M3 wrench(H). Fasten the other end of the umbilical riser tube to the tabletop with ST5×16 screws(G) using a Phillips-head screwdriver. Wrap up the cables with umbilical riser which works for the cable management underneath the worktop.

# 8

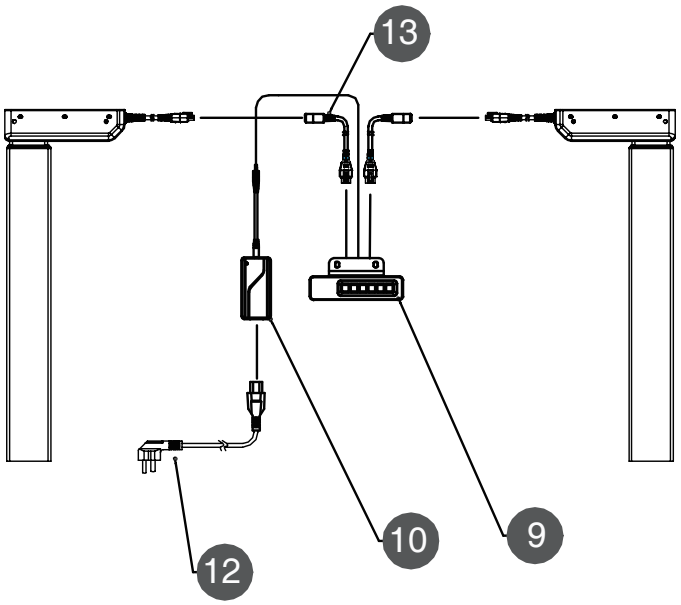


x2

As shown in the figure, connect the relevant components of the two separate desks respectively, including power cords (12), adapter cables (13), hand controllers and other parts, and secure the wires with cable clips (K). Lay the desk frames horizontally before carrying out subsequent operations such as height adjustment.

# 9

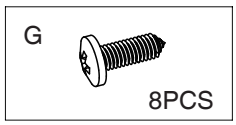


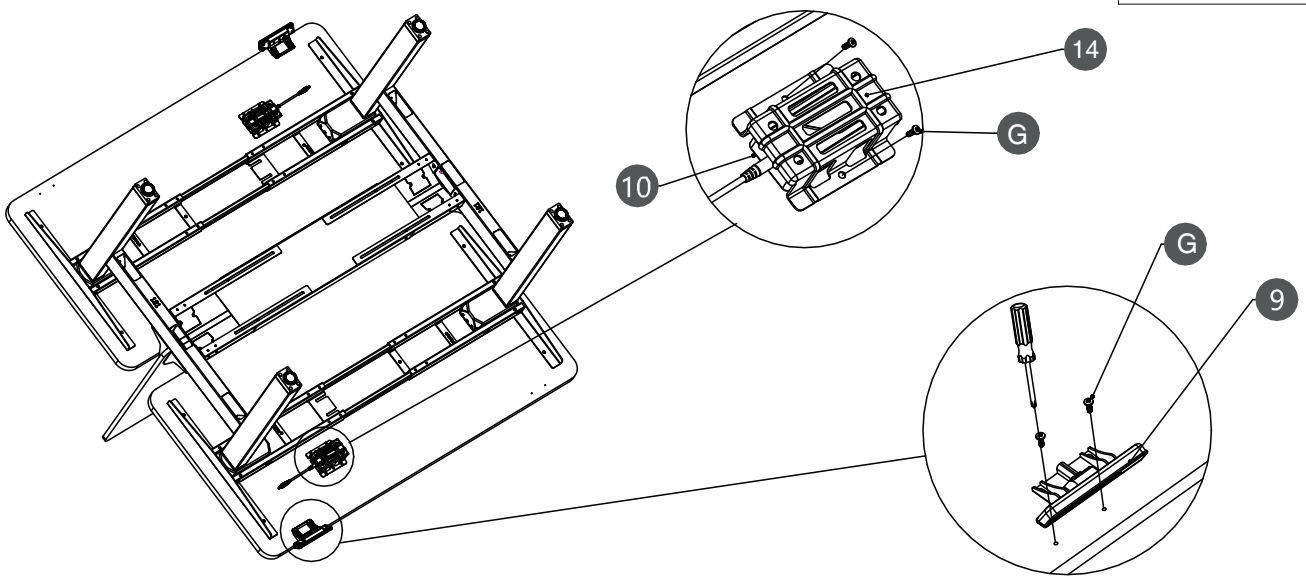


As shown in the figure, use a Phillips screwdriver to fasten the hand controller (9) and adapter fixing bracket (14) with eight ST5×16 self-tapping screws (G).

# 10

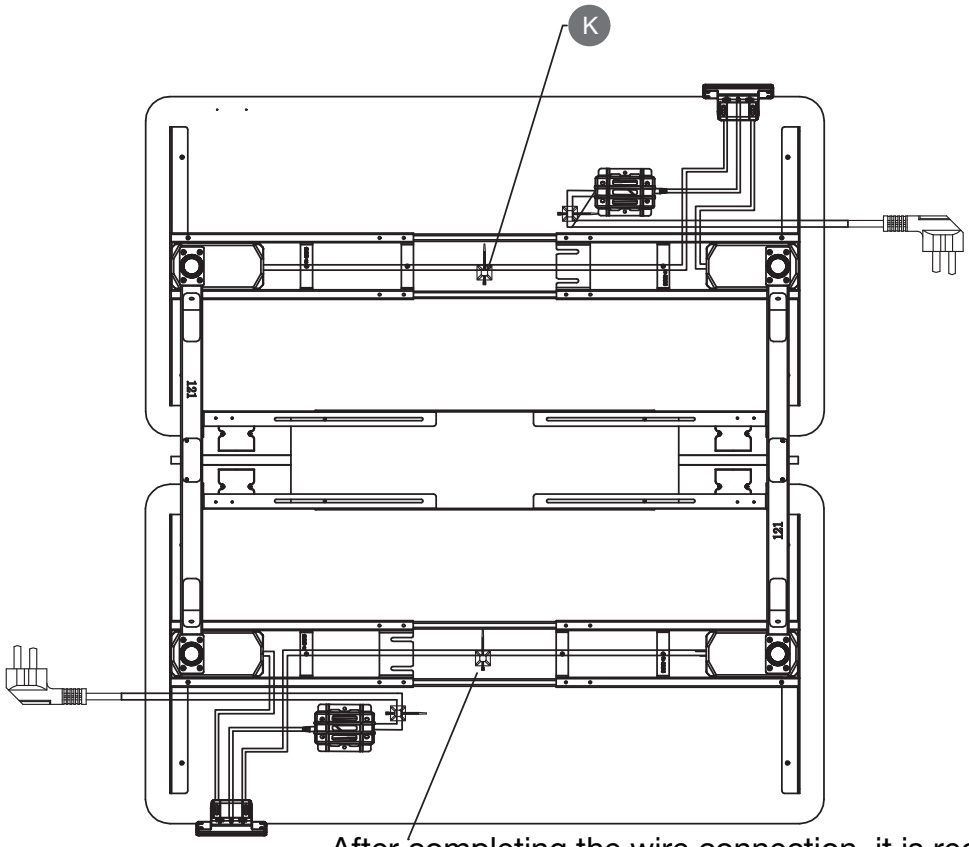


After completing the wire connection, it is recommended to use cable clips (K) for wire routing and positioning.

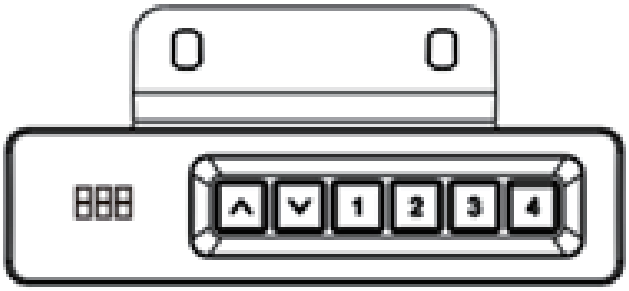

## (1)Regular Functions

### Memory Position Function

(1) Function Description: The controller can store the current height position, allowing the desk to be raised or lowered directly to this position next time. The four numeric keys on the controller can store four different memory positions respectively. Re-setting a memory position will overwrite the previous setting. After saving the memory positions, users can press the corresponding keys to adjust the desk to the preset height directly.

(2) Operating Instructions: Press and hold the ①/②/③/④ key for 3 seconds until the digital readout starts flashing. The flashing will cease after three blinks, which means the current height is successfully stored to the corresponding memory position. (Notes: If you keep holding the key without releasing, the height will be saved once every 3 seconds. When the display is flashing during memory setup, press another numeric key and keep holding it after the flashing stops; the corresponding memory position can also be set successfully.)

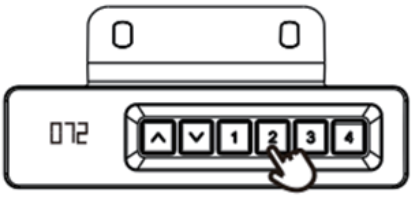

### Upper and Lower Limit Function

(1) Function Description:The height-adjustable desk supports setting upper and lower limit positions. The functions of upper and lower limits are as follows:

① Press the UP key to raise the desk. Once the desk reaches its maximum height or preset upper limit, the UP key will stop working.

② Press the DOWN key to lower the desk. Once the desk reaches its minimum height or preset lower limit, the DOWN key will stop working.

(2) Operation Steps:

① To set the lower limit: Adjust the desk to your desired height, then press and hold both the DOWN key and key ① simultaneously for 3 seconds. The digital tube will display "-dO", indicating the lower limit has been set successfully. When the desk moves down to the preset lower limit, the digital tube will show "-LO". The current height is saved as the new lower limit. This setting is only available if no lower limit has been configured before.

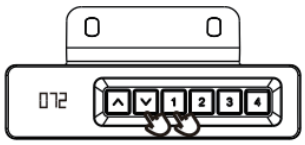

Step 1

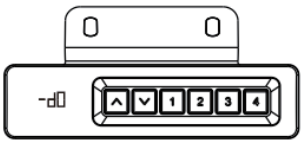

Step 2

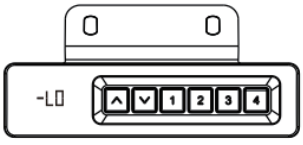

Step 3

② Upper limit setting: Adjust the height of the height-adjustable desk, then press and hold both the UP key and key ① for 3 seconds. The digital tube will display "-UP", indicating that the upper limit has been set successfully. When the desk rises to the preset upper limit, the digital tube will show "-HI". The current height will be saved as the upper limit. This setting operation can only be performed if no upper limit has been set previously.

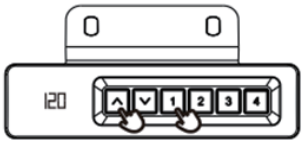

Step 1

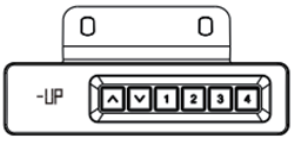

Step 2

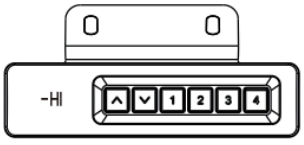

Step 3

③ To cancel the lower limit setting: When the digital tube displays "-LO" at the lowest position, press and hold both the DOWN key and key ① for 3 seconds. After the screen flashes "-dO", the lower limit will be cleared.

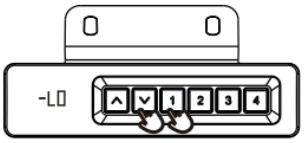

Step 1

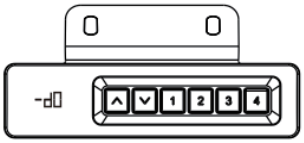

Step 2

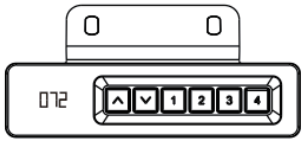

Step 3

④ To cancel the upper limit setting: When the display shows "-HI" at the highest position, press and hold both the UP key and key ① for 3 seconds. After the display flashes "-UP", the upper limit will be cleared.

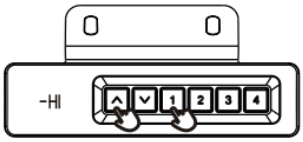

Step 1

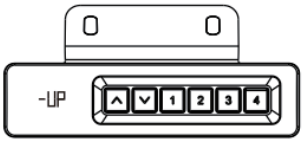

Step 2

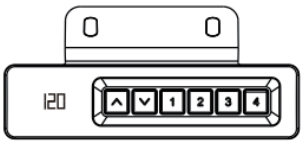

Step 3

## Combination Lock Key Function

(1) Function Description: This function locks the controller to avoid misoperation and prevent accidental incidents.
(2) Operation Instructions:
① Locking method: Under normal operating mode, press and hold key ① and key ② simultaneously for 3 seconds to lock all buttons of the hand controller. The digital tube will display "LOC", and all buttons on the hand controller will become unresponsive at this time.

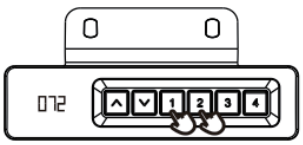

Step 1

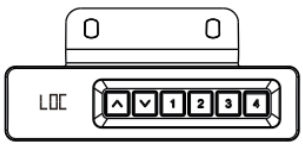

Step 2

② Unlocking method: Under the locked state with "LOC" displayed, press and hold key ① and key ② simultaneously for 3 seconds. The digital tube will switch back to numeric display, the buttons will be unlocked and operational again.

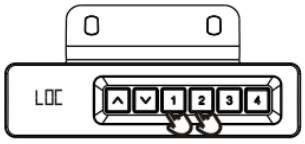

Step 1

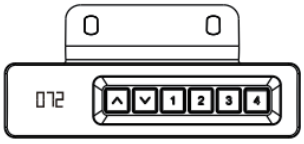

Step 2

## Reset Function

(1) Function Description： The system needs to be reset under specific circumstances, including:
① Upon initial use, the system enters reset mode after power-on.
② Manual reset to enter reset mode.
③ Automatic reset triggered by system abnormalities.

(2) Operation Instructions
① Full travel reset: Press and hold the DOWN key until the desk reaches the lowest position, then release the key and press the DOWN key again for 5 seconds. The hand controller will display "RST". Release the key, then press and hold the DOWN key continuously until numbers appear on the digital tube.

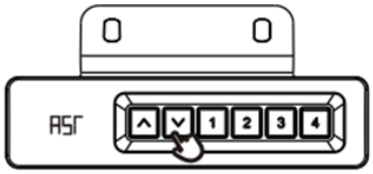


# (2)Special Functions

## Unit Switch Function for Centimeter & Inch Readout on Hand Controller Digital Tube

(1) Function Description The hand controller display can show height in either inches or centimeters as selected.

(2) Operation Instructions Press and hold key ① and key ③ simultaneously for 3 seconds to complete the unit switch. If the current unit is imperial (inches), it will switch to metric (centimeters), and vice versa. No decimal digits are displayed for the metric unit, while decimals will be shown for the imperial unit.

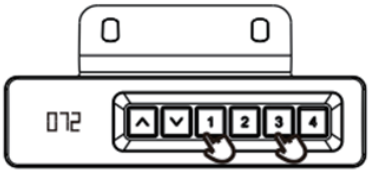


Step 1

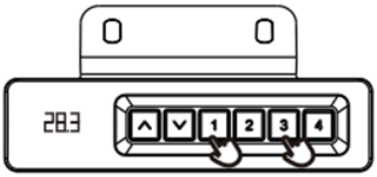


Step 2

## Obstacle Retract Sensitivity Adjustment Function

(1)Function Description： The desk may encounter obstacles while lifting or lowering. To avoid accidents, the desk will retract a certain distance automatically once it hits a blockage.

(2)Operation Instructions： Under normal operating mode, press and hold key ① and key ④ simultaneously for 3 seconds. The digital tube will flash "S0X" (X stands for the current sensitivity level). Use the UP and DOWN keys to switch between different levels. After selecting the desired level, press and hold key ① and key ④ for another 3 seconds. The flashing "S0X" will stop, and the display will revert to the current height reading after 3 seconds.

Sensitivity levels from high to low are 1, 2 and 3, corresponding to extra sensitive, moderate sensitive and low sensitive obstacle retract response respectively. Level 0 means the obstacle detection function is disabled.

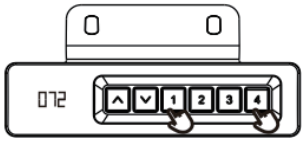


Step 1

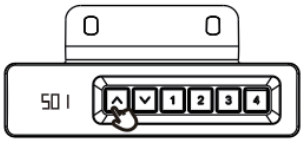


Step 2

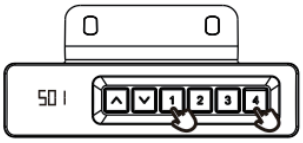


Step 3

## (3)Protection Functions

### System Protection Functions of Height Adjustable Desk

(1)Function Description: The system of the height adjustable desk can automatically detect abnormal states and give feedback to users. Details of each abnormal protection function are as follows:
① Motor Overcurrent Protection The digital tube displays E01. The system will activate automatic protection when the current of the lifting column exceeds a specific threshold. For standard columns, overcurrent protection triggers when the current exceeds 6±1A, and the column stops moving immediately.
Note: A high-power power adapter is required for overcurrent protection to work properly. If a low-power adapter is used, high current conditions (such as the desk hitting the top or bottom limit) will pull down the output voltage of the adapter, causing the control chip to reset and the display to show RST.

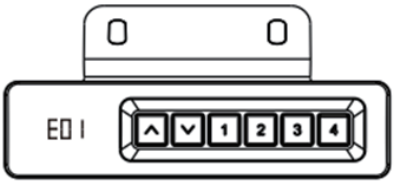


② Duty Cycle Protection If the total lifting/lowering runtime of the desk exceeds 2 minutes and 30 seconds within any 20-minute window, the controller will automatically activate duty cycle protection, and the digital tube on the hand controller will display "H01". All operation buttons will become unresponsive at this time.

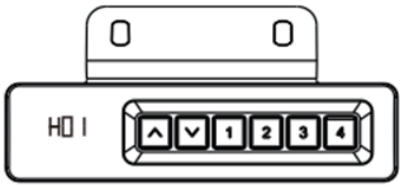


(2) Operation Instructions
① When the controller triggers overcurrent protection, perform a manual reset; the desk can be reused after the reset is completed.
② When the system enters duty cycle protection, wait 1 minute to 17 minutes and 30 seconds for the controller to recover, and the hand controller will display the height normally again afterwards.

### Reset Fault Protection

(1) Function Description: During operation of the height adjustable desk, abnormal signals may be triggered due to poor motor contact or other faults, and the system will activate automatic protection. Manual reset is required to resume normal use.
(2) Operation Instructions: First manually check the desk for faults. If tilting is observed or occurs during operation, stop all operations immediately and contact after-sales service for maintenance. Follow the steps below to perform a reset: Press and hold the DOWN key for 5 seconds until "RST" appears on the digital tube of the hand controller. Release the DOWN key, then press it again. The lifting columns will descend and start the reset process. The reset is finished once height numbers are shown on the display.

## (4) Table Fault Code List

| Fault Code | Fault Description | Solutions |
|---|---|---|
| E01 | M1 Overcurrent Protection | Check if the load is excessive or if the lifting column hits the top/bottom limit. Troubleshoot the fault, then long-press the DOWN key to reset. The desk can be reused after resetting. |
| E02 | M2 Overcurrent Protection | Same as above |
| E03 | M3 Overcurrent Protection | Same as above |
| E04 | M4 Overcurrent Protection | Same as above |

| Fault Code | Fault Description | Solutions |
|---|---|---|
| E07 | M1 Hall Sensor Fault | Check if the lifting column connector is fully inserted. Troubleshoot the fault, then long-press the DOWN key to reset. The desk can be reused after resetting. |
| E08 | M2 Hall Sensor Fault | Same as above |
| E09 | M3 Hall Sensor Fault | Same as above |
| E10 | M4 Hall Sensor Fault | Same as above |
| E12 | Low Voltage | Check if the system power supply works normally. Troubleshoot the fault, then long-press the DOWN key to reset. The desk can be reused after resetting. |
| E13 | Height Asynchronization: Height difference between two columns of one controller exceeds preset value | Check if the lifting column connector is fully inserted. Troubleshoot the fault, then long-press the DOWN key to reset. The desk can be reused after resetting. |

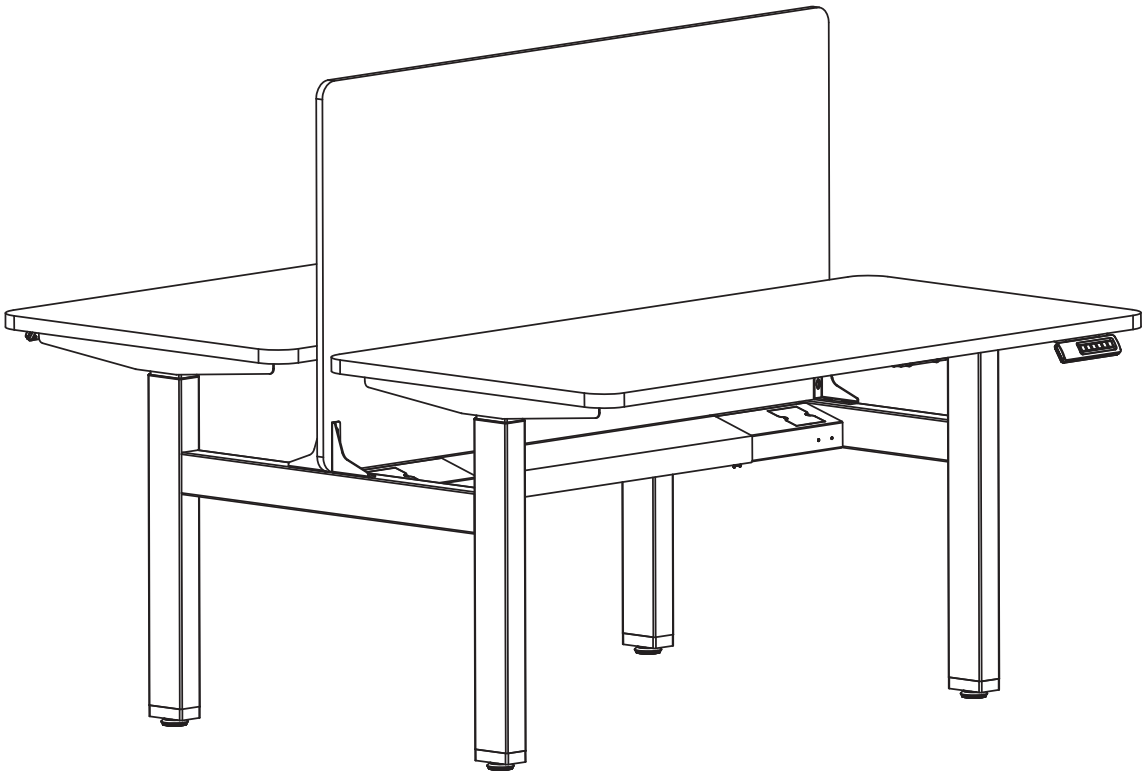

Thank you very much for purchasing from us.

We have always been trying to provide the best service and reliable products for every customer.

However,accident may happen sometimes,please contact us to resolve any issue before leaving a negative feedback.

Please contact at: christyningxing@nxubay.com or
via Phone#3233938260 at EST 1PM-5PM

Many thanks and welcome to our shop again!