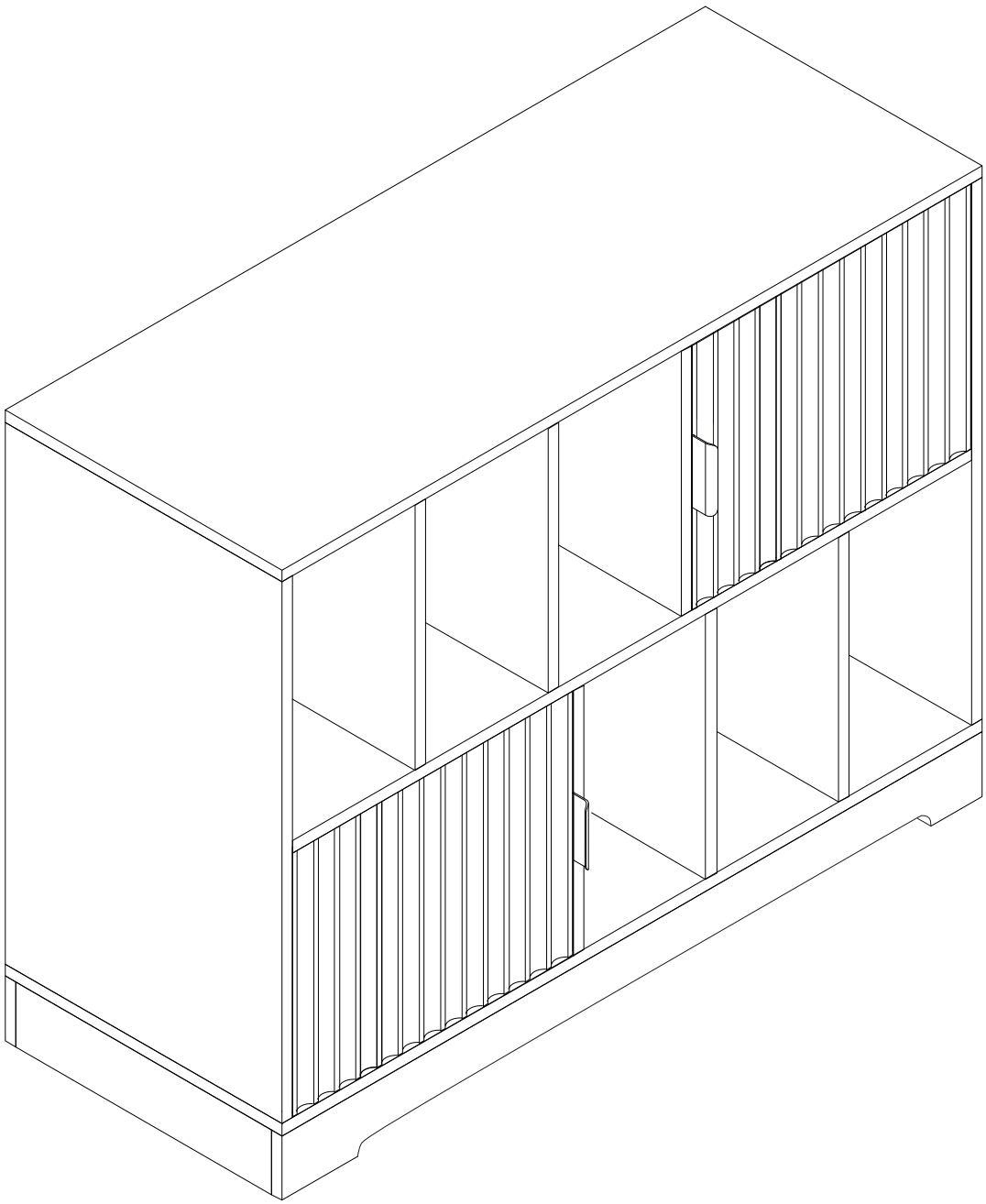

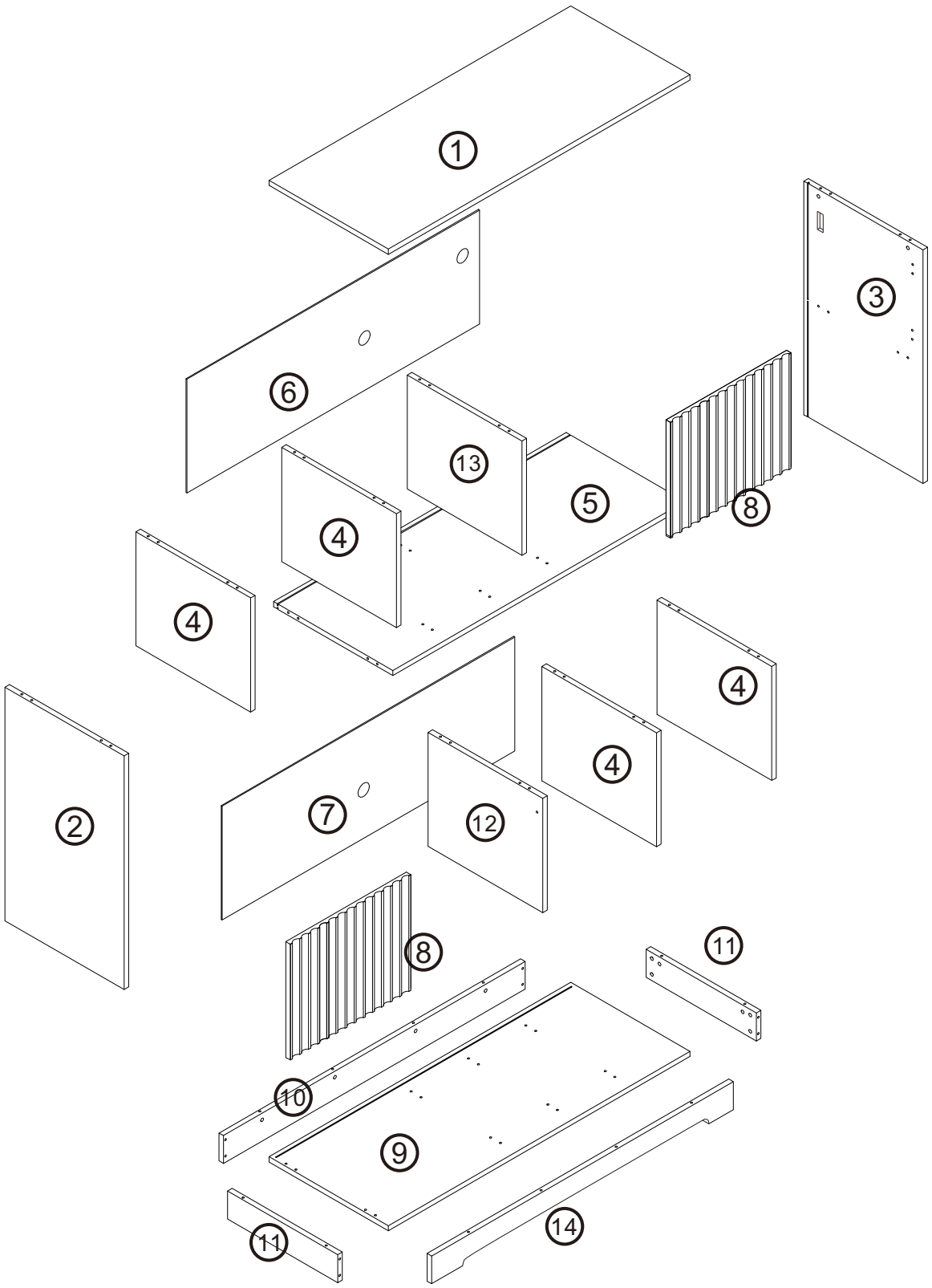
1
6
3
13
5
8
4
4
4
4
2
7
12
8
11
10
9
11
14

① 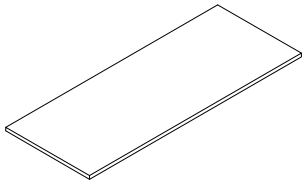 x1	②  x1	③ 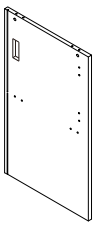 x1
④ 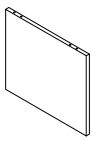 x4	⑤ 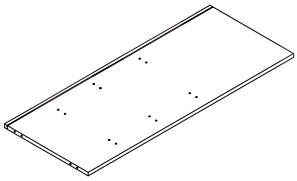 x1	⑥ 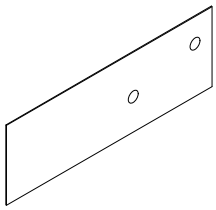 x1
⑦ 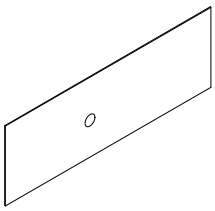 x1	⑧ 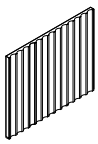 x2	⑨ 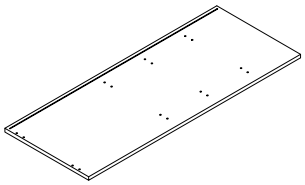 x1
⑩ 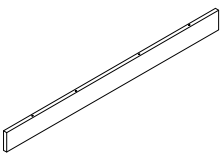 x2	⑪  x2	⑫ 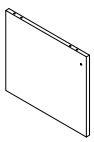 x1
⑬ 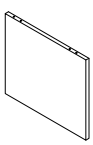 x1	⑭ 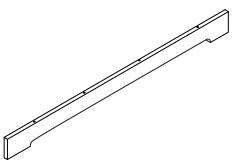 x1	

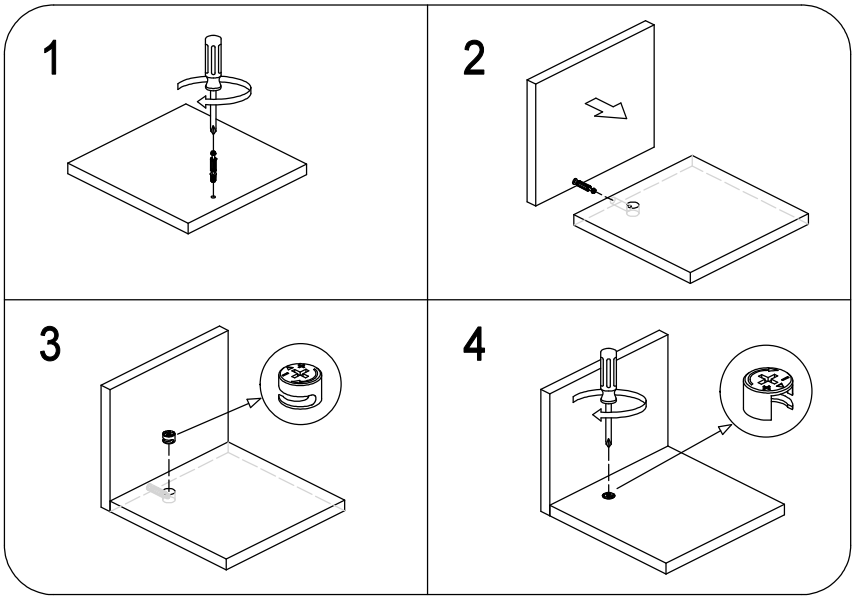

Cam Lock Fastening System

This Cam Lock Fastening System will be used throughout the assembly process

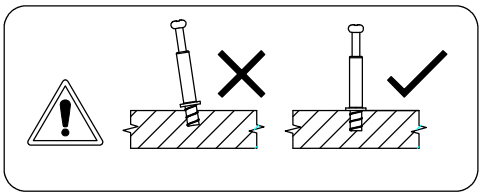

Ⓐ 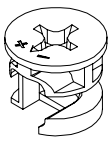 x40	Ⓑ  x40	Ⓒ 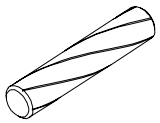 x36
Ⓓ 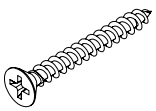 M4x35 x16	Ⓔ  M4x14 x24	Ⓕ 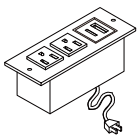 x1
Ⓖ 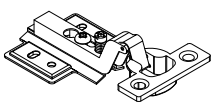 x4	Ⓗ  M3.5x12 x4	Ⓘ 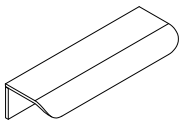 x2
Ⓙ 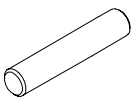 x2	Ⓚ  x8	Ⓛ  M3x14 x14
Ⓜ  x4	Ⓝ 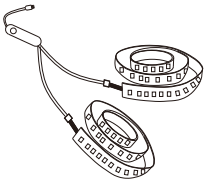 x1	

1

Ⓑ

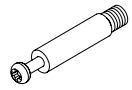

x6

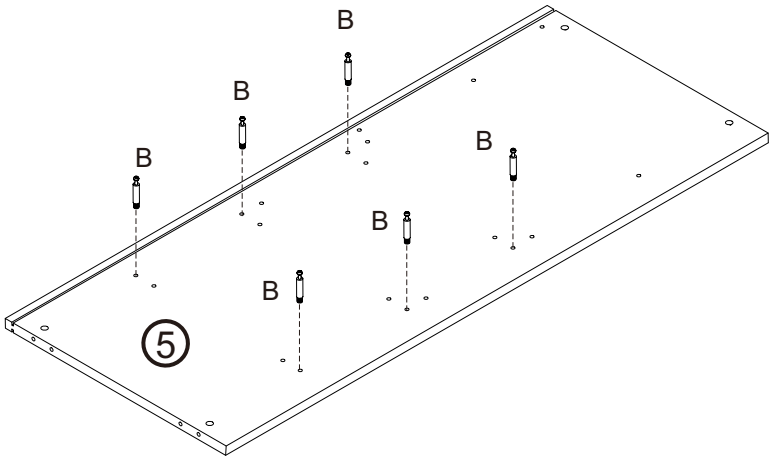

2

Ⓒ

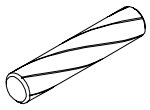

x6

Ⓓ

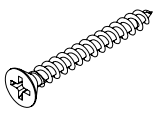

x6

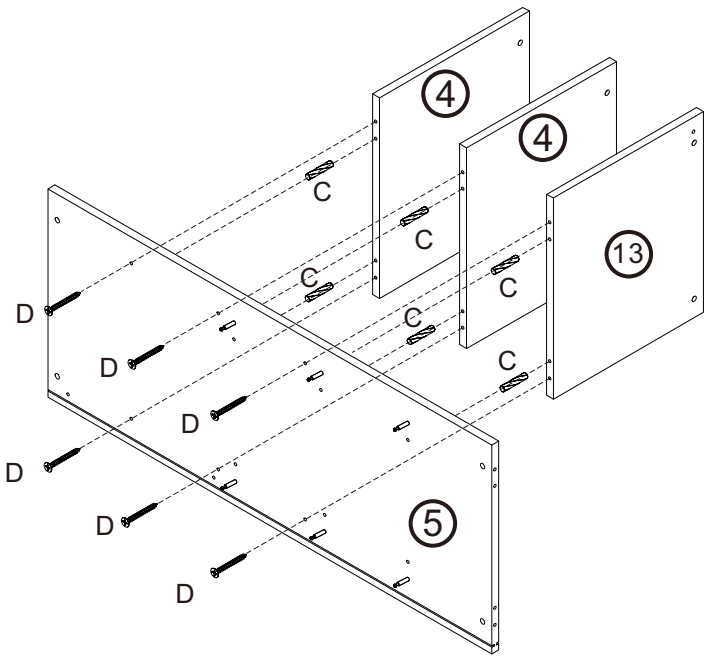

3

Ⓐ	Ⓒ
 x2	 x2

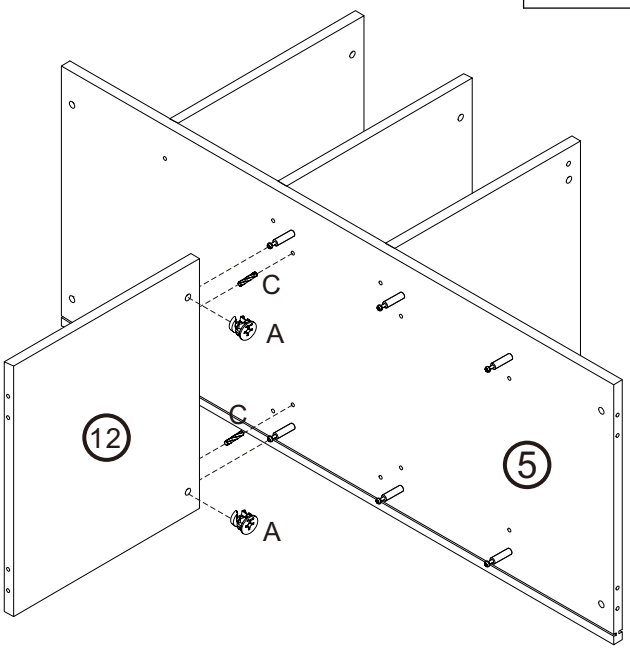

4

Ⓐ	Ⓒ
 x2	 x2

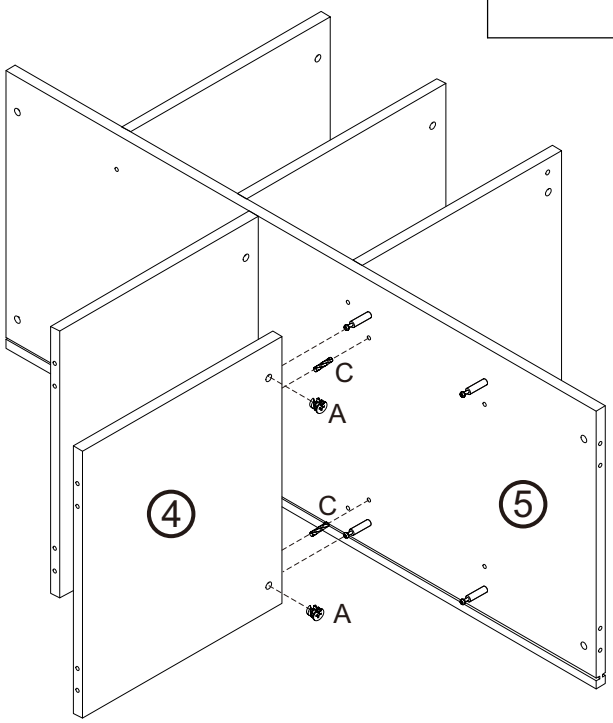

5

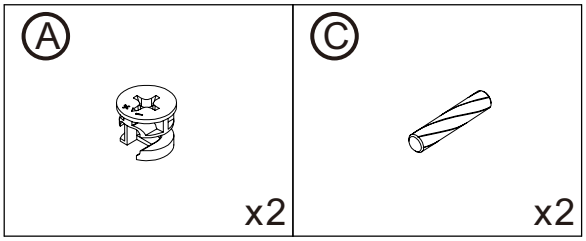

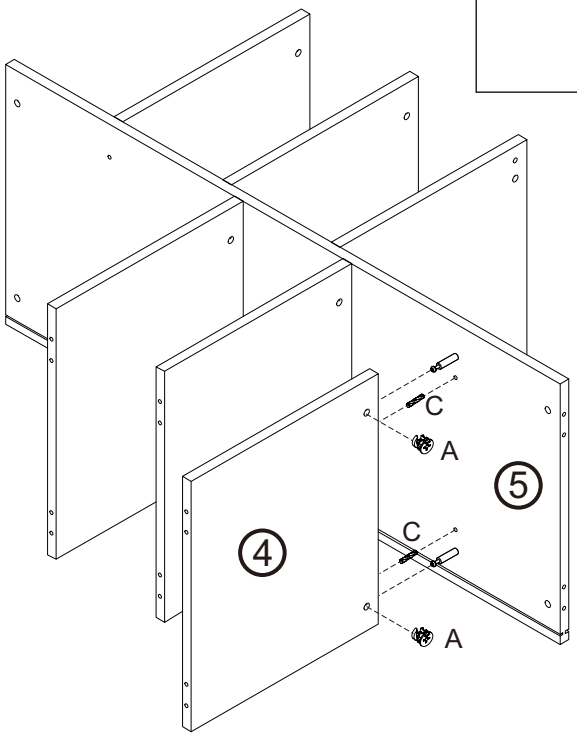

6

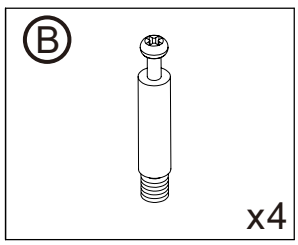

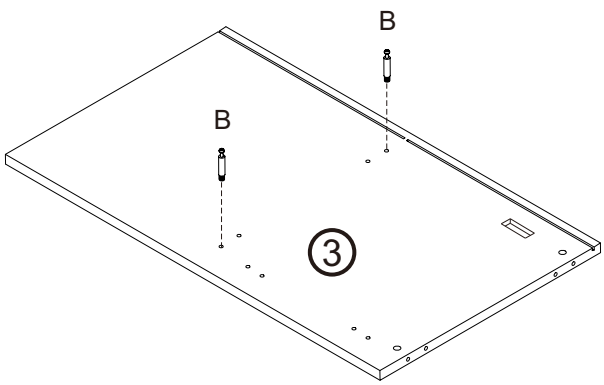

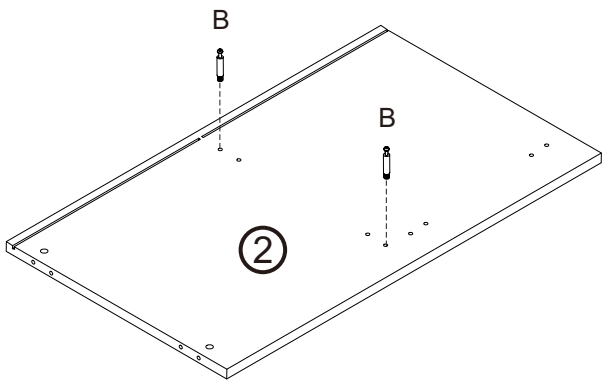

7

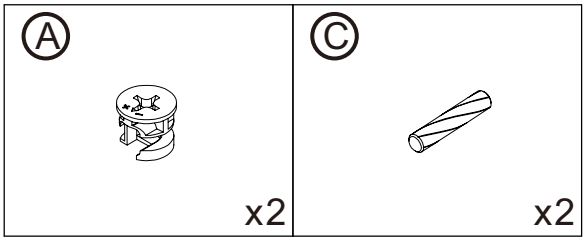

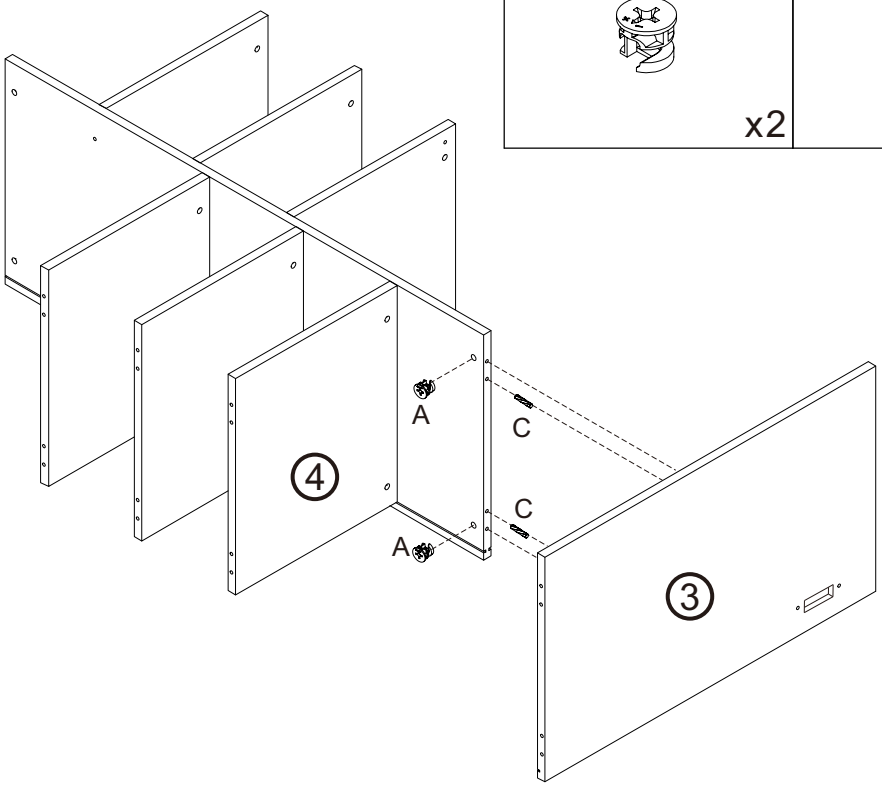

8

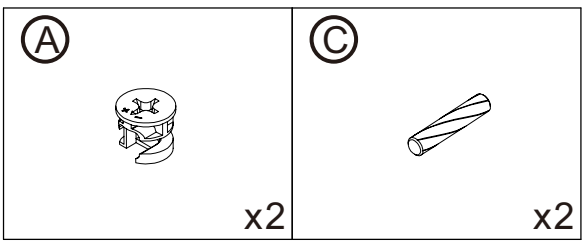

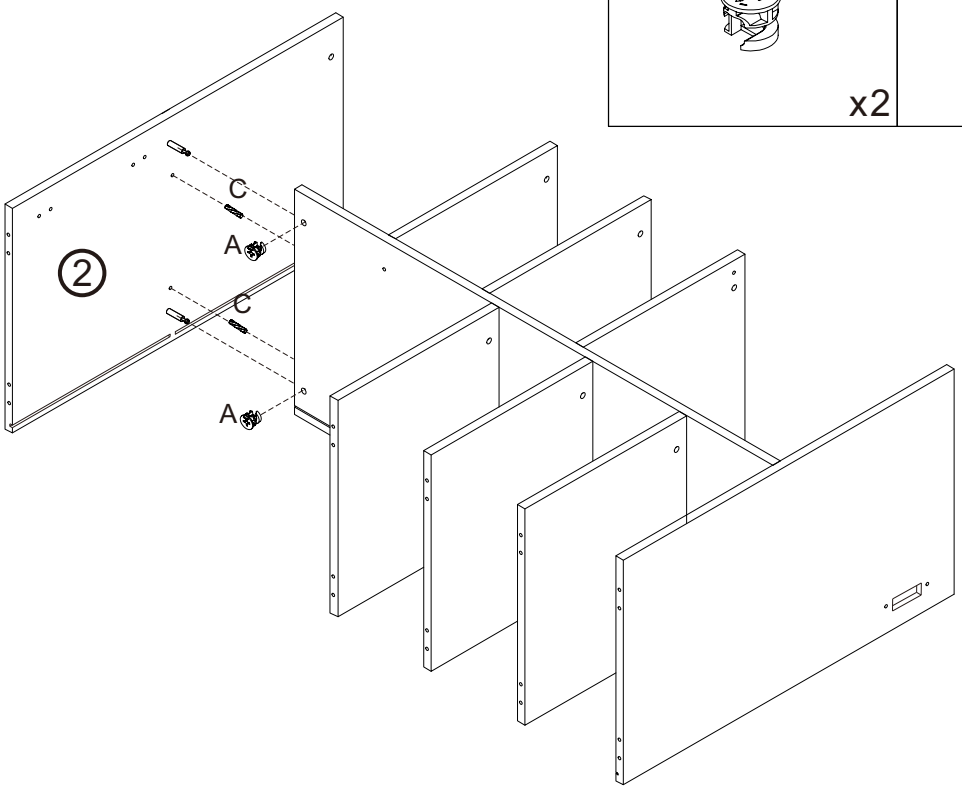

9

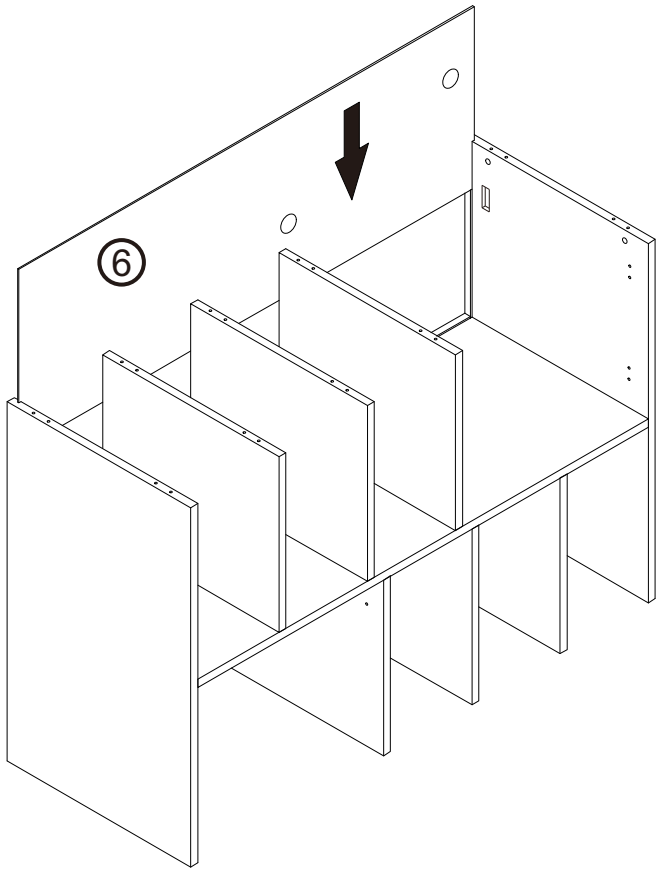

10

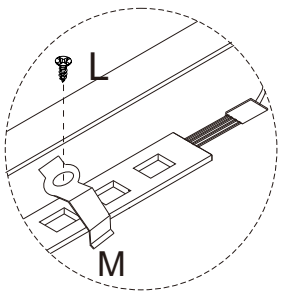

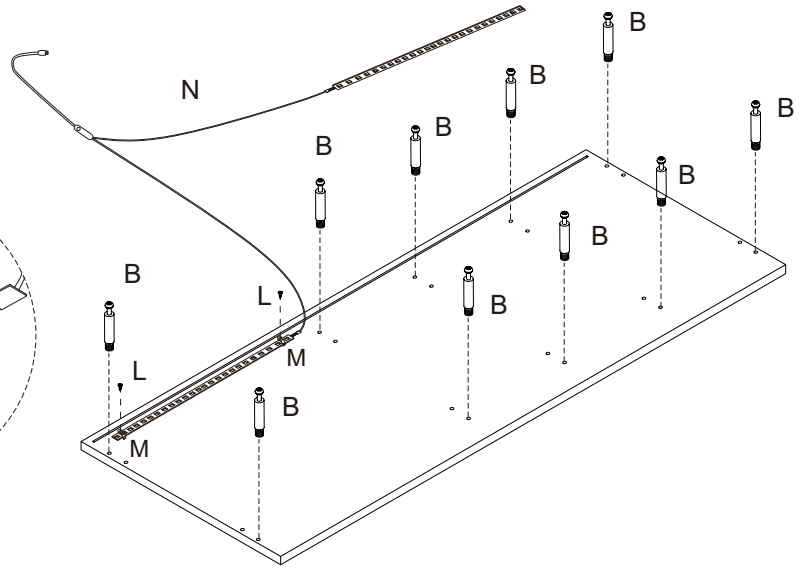

Ⓑ

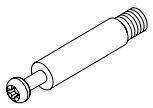

x10

Ⓛ



x2

Ⓜ



x2

Ⓝ



x1

11

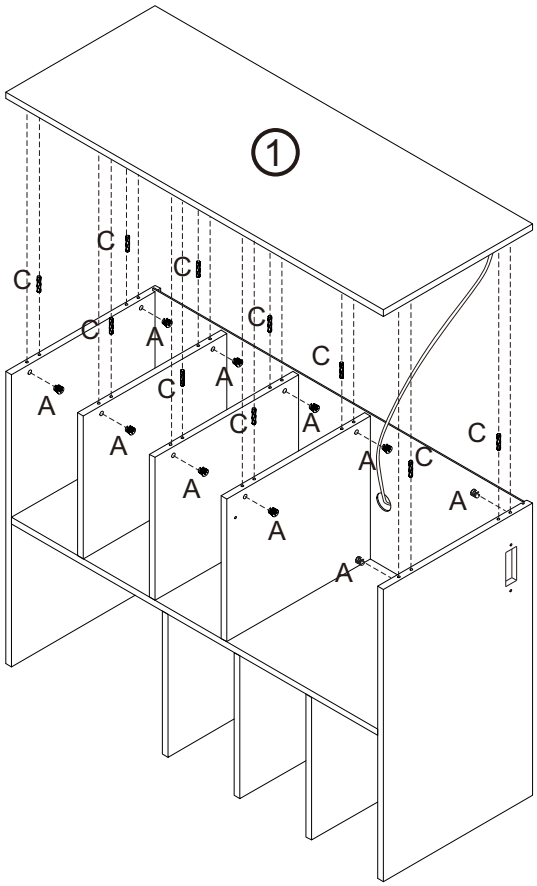

Ⓐ



x10

Ⓒ

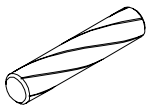

x10

12

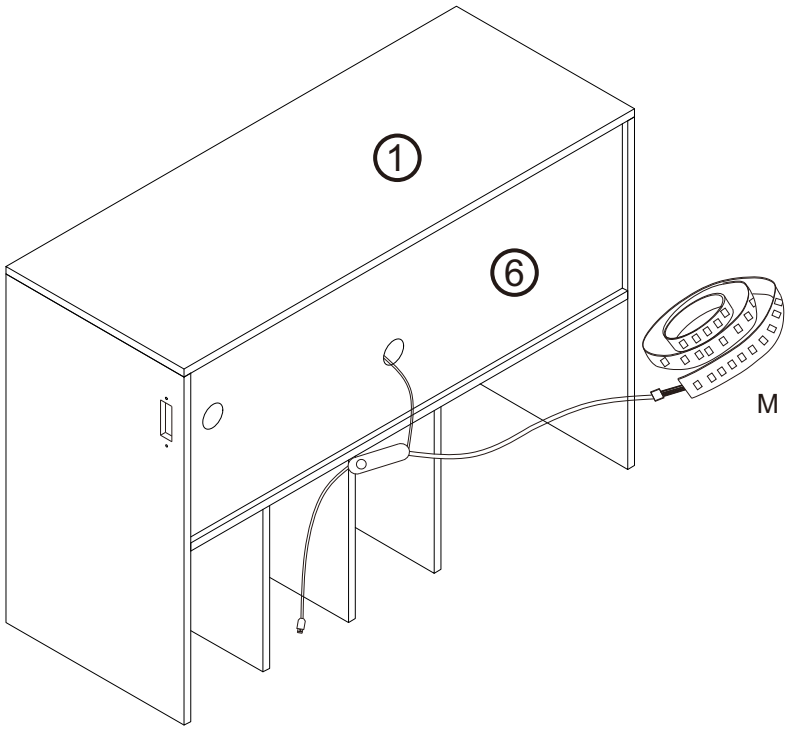

13

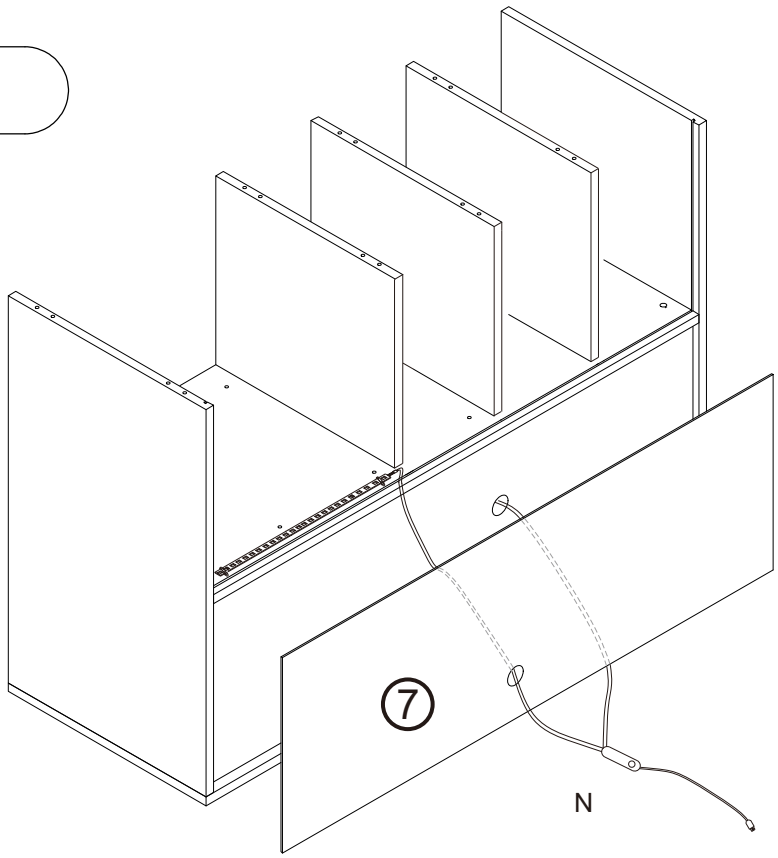

Ⓛ



x2

Ⓜ



x2

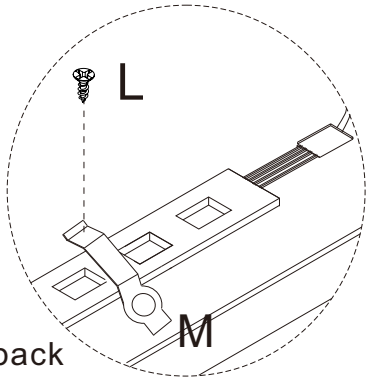

The light strips should first pass through the 7th back panel and then be installed.

14

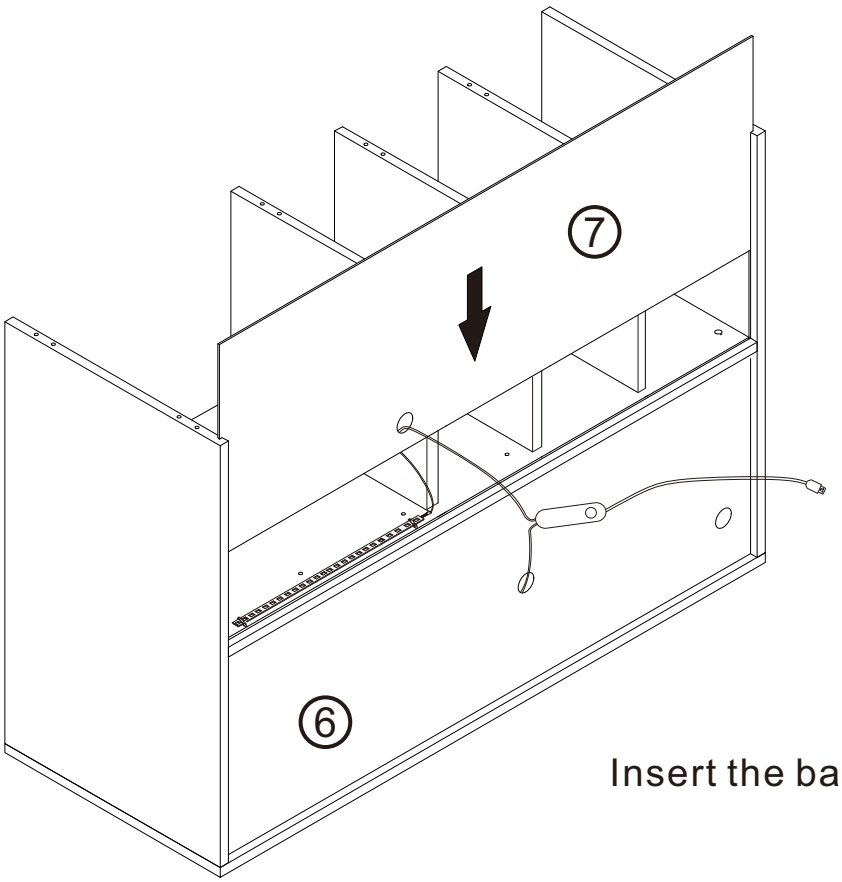

Insert the back panel

15

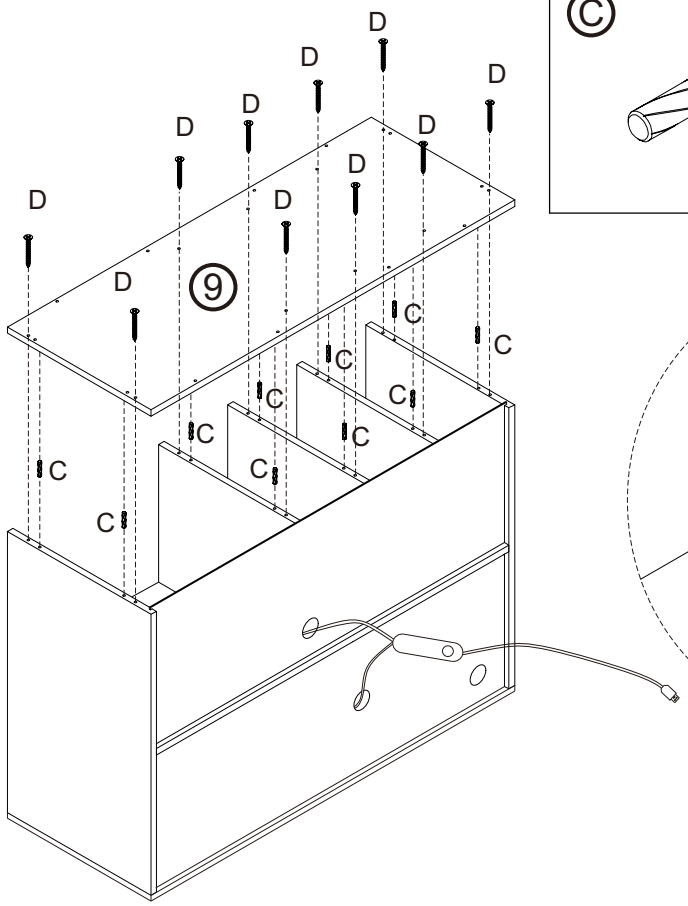

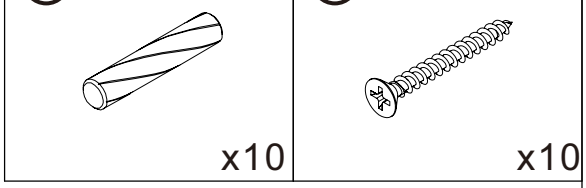

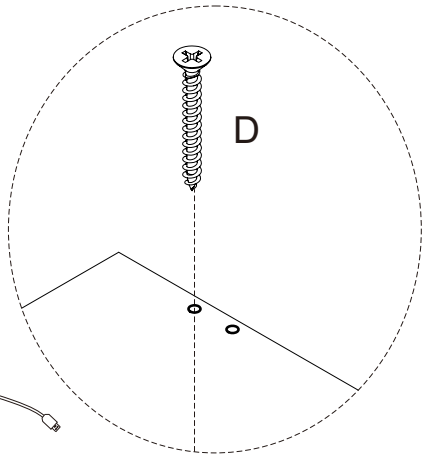

16

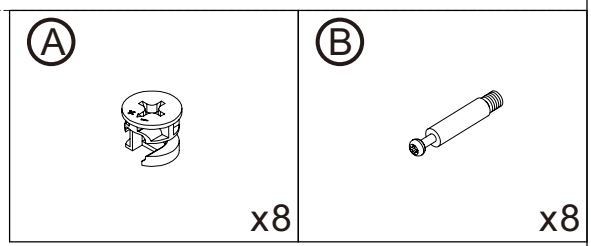

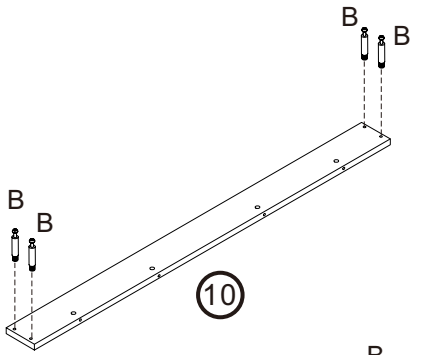

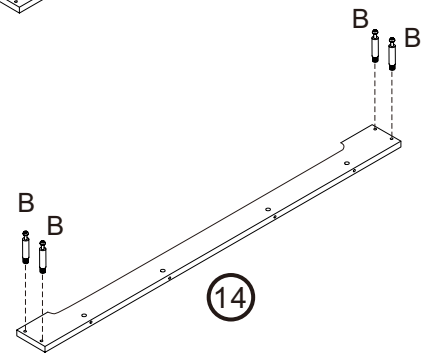

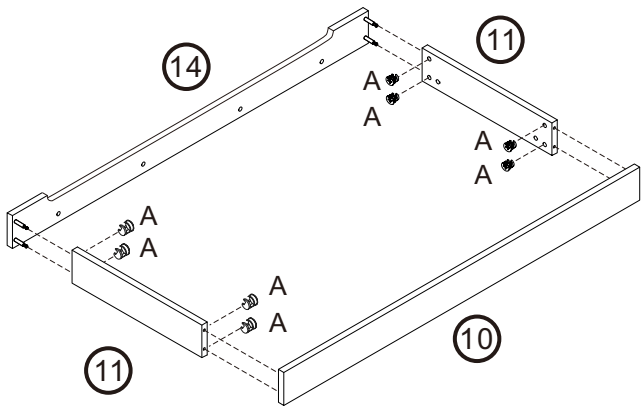

17

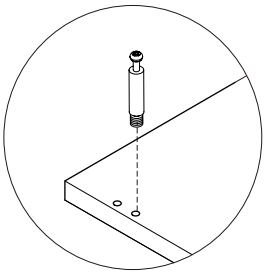

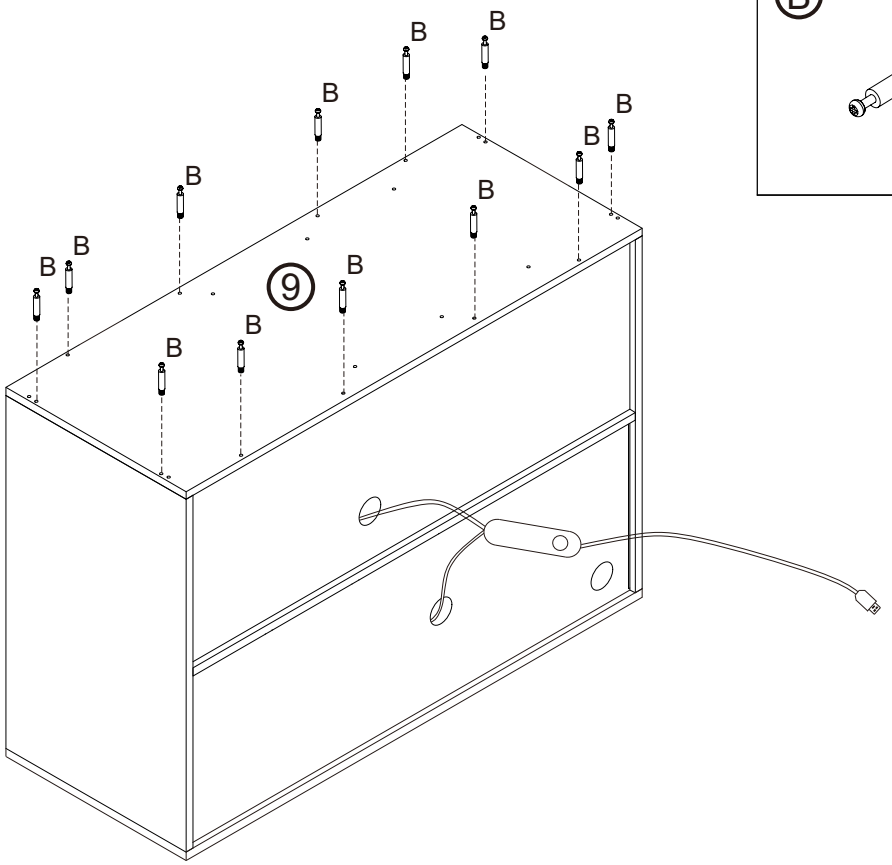

Ⓑ

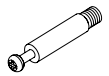

x12

18

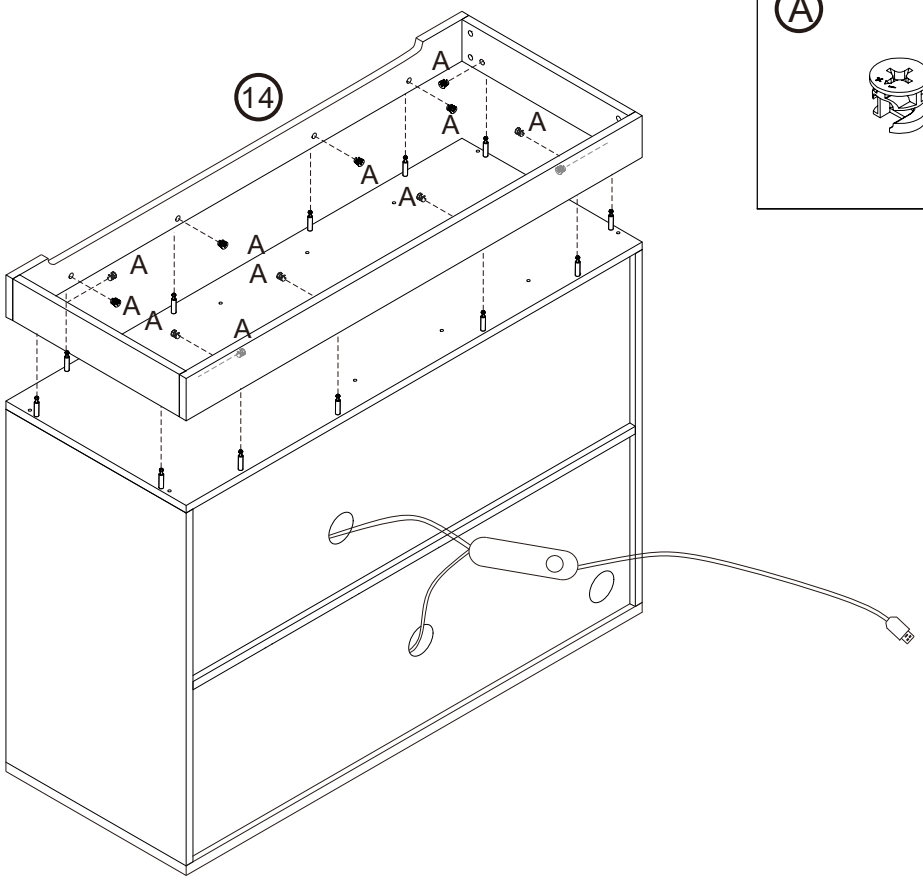

Ⓐ

x12

19

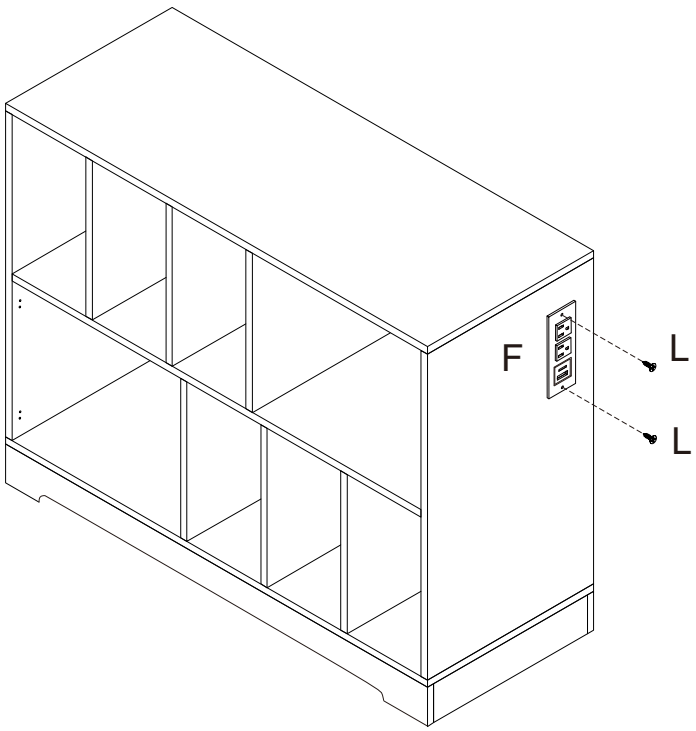

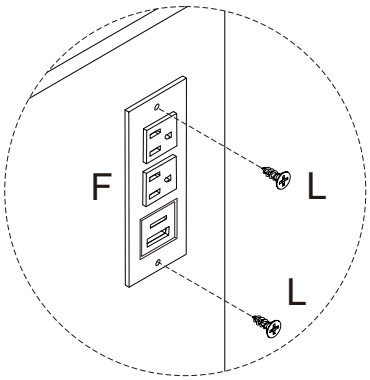

Ⓛ



x2

Ⓕ

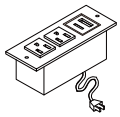

x1

20

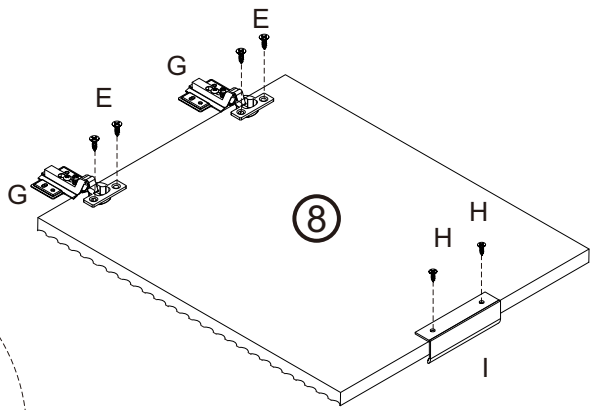

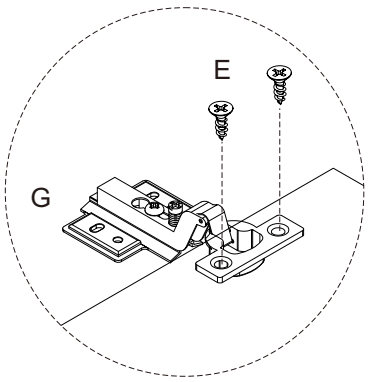

x2

Ⓔ



x8

Ⓖ

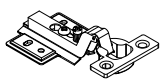

x4

Ⓗ



x4

Ⓘ

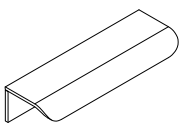

x2

21

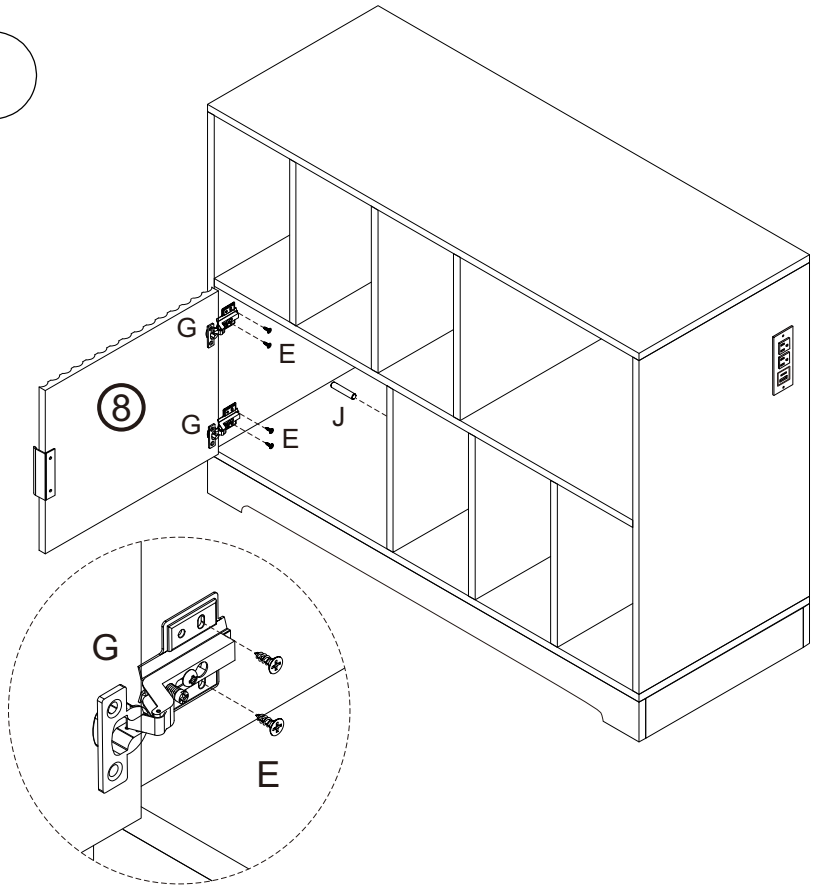

Ⓔ



x4

Ⓙ

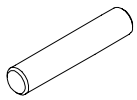

x1

22

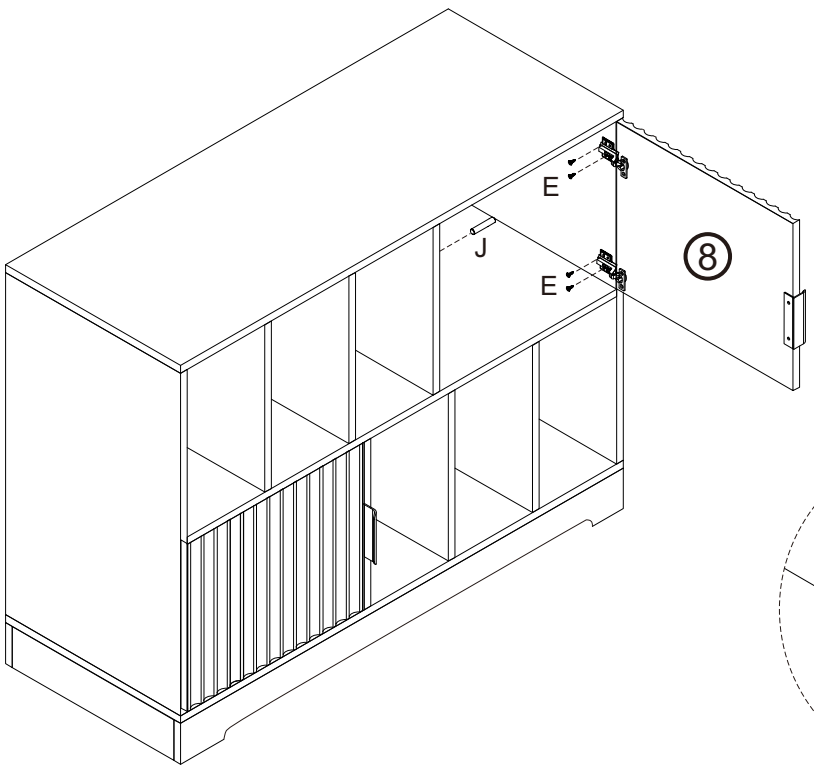

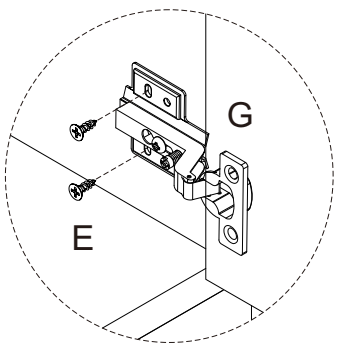

Ⓔ



x4

Ⓙ

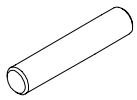

x1

23

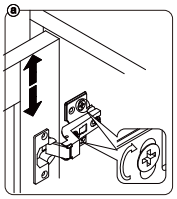

To adjust the door vertically loosen the screw asshown and move up and down as needed.

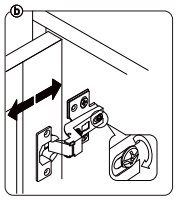

To adjust the gap from the door to the main frame turn the screw clockwise or anti-clockwise as needed.

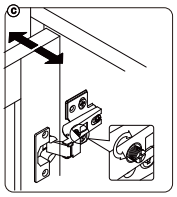

To adjust the door laterally adjust the screw as shown by turningdclockwise or anti-clockwise.

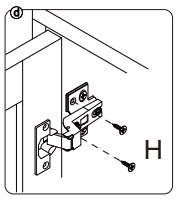

Lock the final screws right in for product stability.

Ⓔ



x8

24

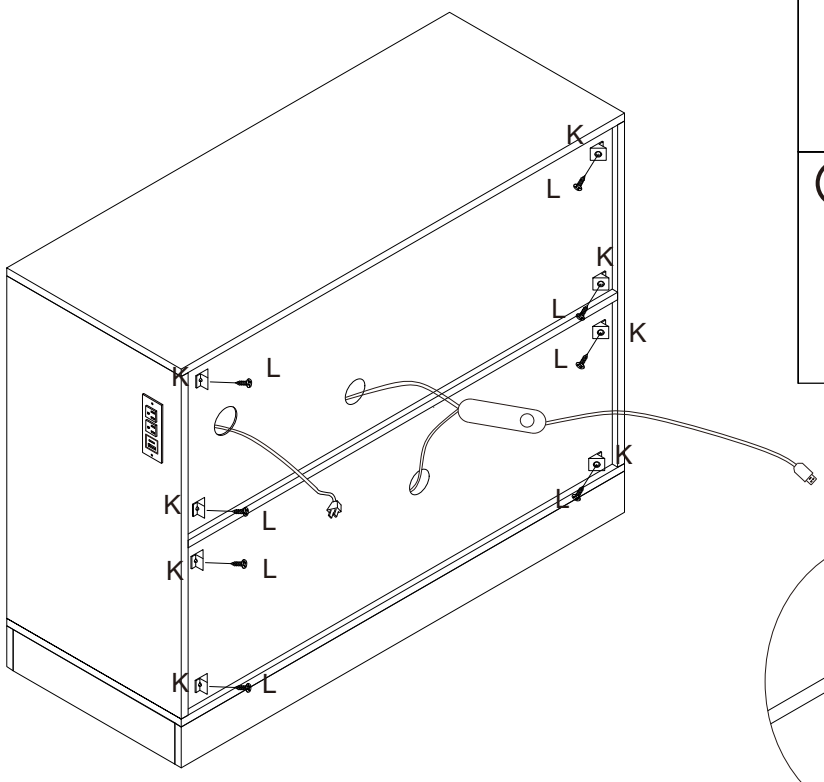

Ⓚ



x8

Ⓛ



x8

