Assembly Instructions

Caution : You must read this before you proceed

Care & Maintenance



- Not for commercial use. For residential use only.



- Furniture may scratch floors. We recommend using furniture pads to protect your floors.



- Do not put hot items directly on furniture surface.



- Do not clean furniture with harsh cleansers or polish.



- Do not place furniture under direct sunlight.



- Do not place furniture near heating or cooling vents.



- Do not write on furniture without a padded barrier to protect the surface.



- Do not place furniture outside . For indoor use only.



- Stains may be removed with mild soap solution and damp cloth.



- Children should not climb or jump on the furniture.



- Dust and pick-up spills using a clean, non-colored, lint-free cloth.

QUEEN BED
N769P465276-N769P465277

! WARNING !

STRANGGULATION HAZARD
NEVER place bed near windows where cords from blinds or drapes may strangle achild.
NEVER suspend strings over bed.
NEVER place items with astring, cord, or ribbon, such as hood strings or pacifercords, around a child's neck. These items may catch on bed parts.
ALWAYS follow assembly instructions.
Not intended for children under the age of six. INFANTS HAVE DIED FROMBECOMING ENTRAPPED IN BEDs. Openings in and between bed parts can entrapthe neck and head of a small child.
NEVER use bed for child under the age of six.
The mattress must be appropriately sized for the bed. If the mattress is undersizeddangerous gaps can exits and a person can become entrapped or entangled in the frame and suffocate

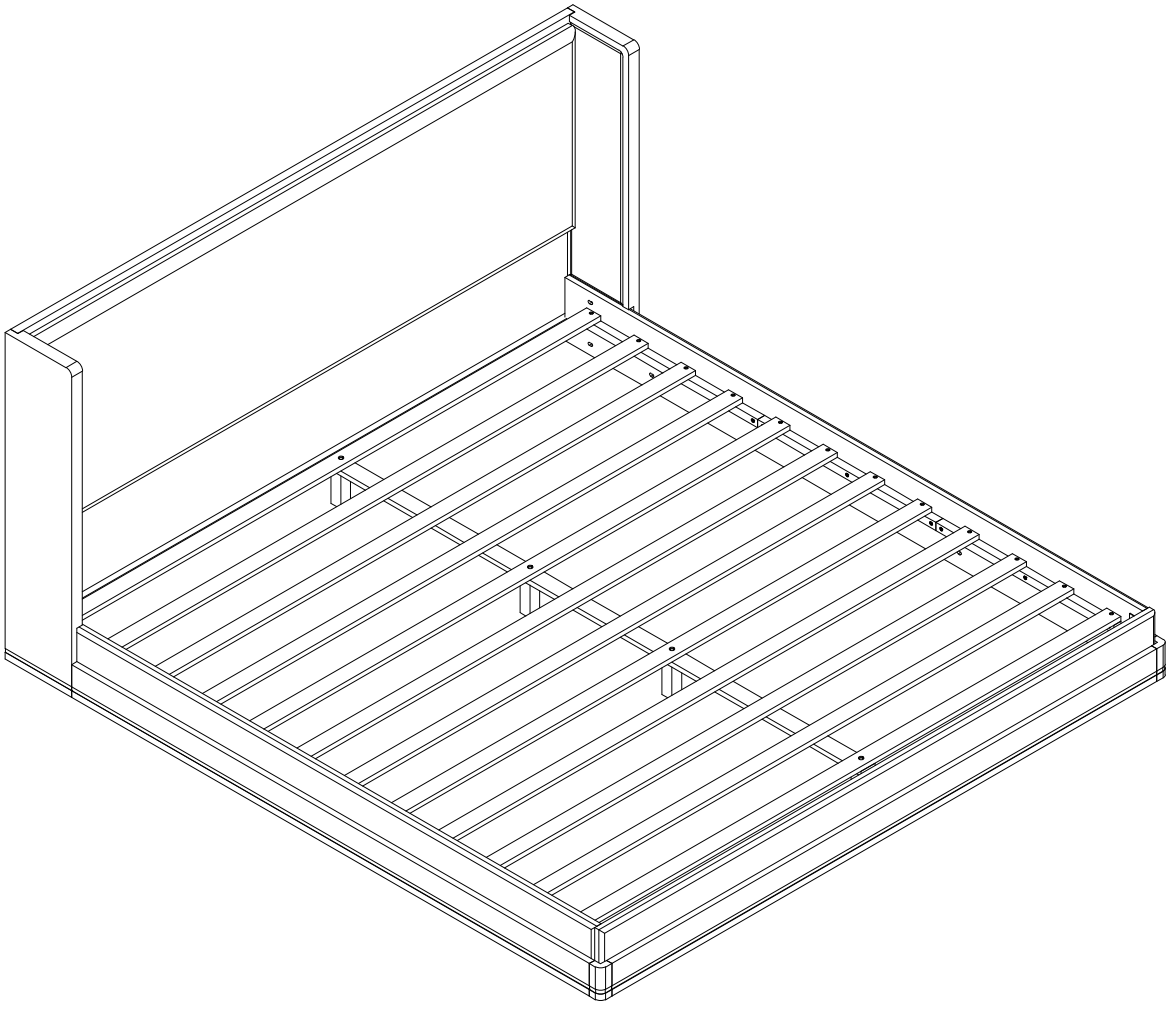

CAUTION: This Queen Bed is NOT a TOY.
Keep your child / children at bay in the process of assembly.
For turning the Queen Bed and to prevent damage to the Queen Bed.
02 persons may be needed to execute this action.

PARTS LIST
N769P465276

③	Headboard Panel 	1PC
⑫	Slats 1	4PCS

⑬	Slats 2	8PCS

PARTS LIST
N769P465277

①	Right Headboard Leg 	1PC
②	Left Headboard Leg 	1PC
④	Upper Headboard Support Rail 	1PC
⑤	Middle Headboard Support Rail 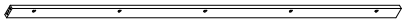	1PC
⑥	Lower Headboard Support Rail 	1PC
⑦	Middle leg 	4PCS

⑧	Side rails 	2PCS
⑨	Upholstered bed side rail (left) 	1PC
⑩	Upholstered bed side rail (right) 	1PC
⑪	Slats support	1PC
⑭	Upholstered footboard panel 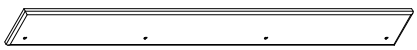	1PC
⑮	Footboard panel 	1PC

HARDWARE LIST
N769P465277

A	Bolts 1/4*45mm / R30mm 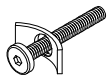	14PCS +1
B	Allen wrench 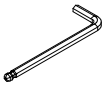	2PCS
C	Wooden dowel Ø 8 * 30mm 	16PCS +1
D	Bolts + flat washer 1/4*30mm + 2*8*15mm 	16PCS +1
E	Bolts + flat washer 1/4*15mm + 2*8*15mm 	4PCS

F	Bolts + flat washer 1/4*35mm + 2*8*15mm 	5PCS +1
G	Bolts + flat washer 1/4*40mm + 2*8*15mm 	5PCS +1
H	Bolts 1/4*45mm 	4PCS +1
I	Vis flat head 4*30 mm 	24PCS +1
ASSEMBLY TOOLS REQUIRED (NOT INCLUDED) 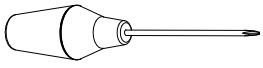		

PRODUCT DETAILS

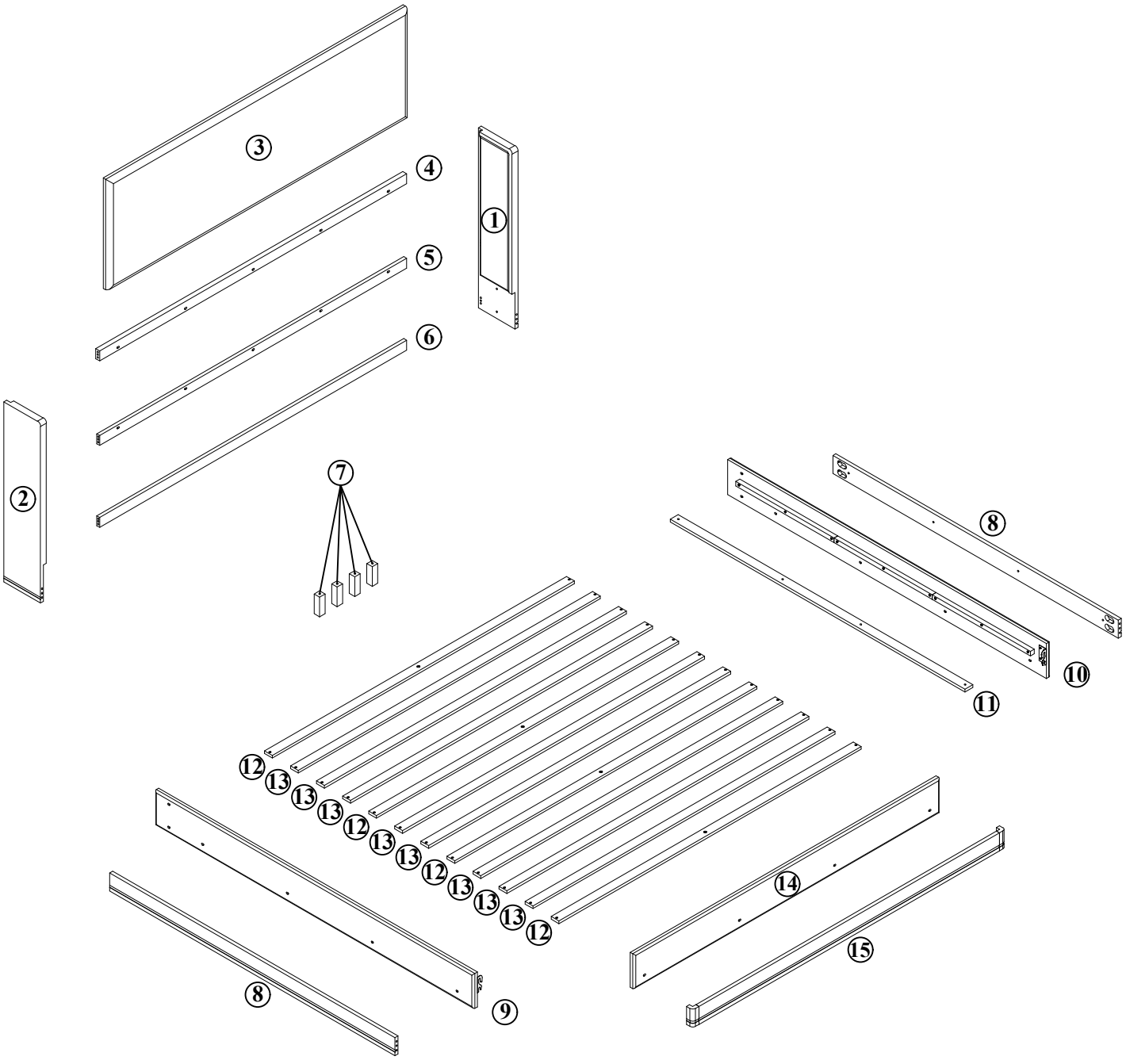

ASSEMBLY PREPARATION

① 1pc

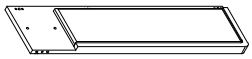

② 1pc



③ 1pc



④ 1pc



⑤ 1pc

⑥ 1pc

⑦ 4pcs



⑧ 2pcs

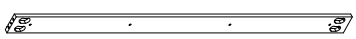

⑨ 1pc

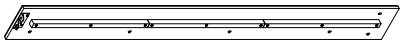

⑩ 1pc



⑪ 1pc

⑫ 4pcs

⑬ 8pcs

⑭ 1pc



⑮ 1pc



Ⓐ	Bolts 1/4*45mm / R30mm 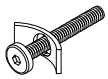	14PCS +1
Ⓑ	Allen wrench 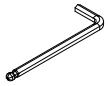	2PCS
Ⓒ	Wooden dowel Ø 8 * 30mm 	16PCS +1
Ⓓ	Bolts + flat washer 1/4*30mm + 2*8*15mm 	16PCS +1
Ⓔ	Bolts + flat washer 1/4*15mm + 2*8*15mm 	4PCS +1
Ⓕ	Bolts + flat washer 1/4*35mm + 2*8*15mm 	5PCS +1
Ⓖ	Bolts + flat washer 1/4*40mm + 2*8*15mm 	5PCS +1
Ⓗ	Bolts 1/4*45mm 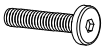	4PCS +1
Ⓘ	Vis flat head 4*30 mm 	24PCS +1



- Read instructions, cover to cover-



- Have 2 adults on hand for assembly-



- Do not assemble on flooring or carpet-



- Assemble on a clean non-marring surface (packing foam)-



- Save all packaging until finished-

ASSEMBLY STEPS

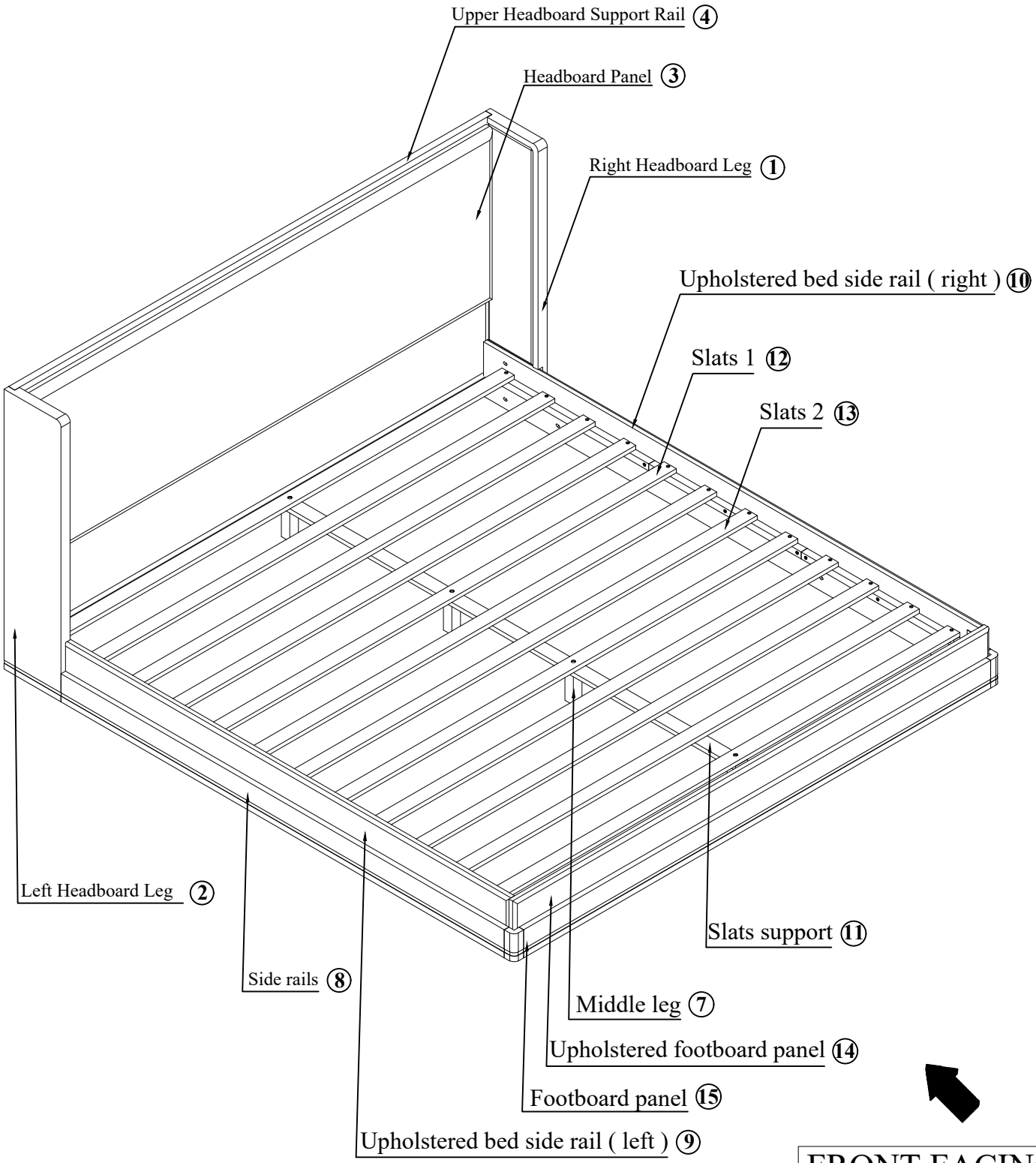

This bed has multiple parts and may require up to some 30 minutes - 1H minutes to assemble. To give you an overview of the upholstered bed pasrts, the above picture is to help you put the various parts into perspective . please read through the instructions below to familiarise yourself with the parts and steps before assembly.

STEP 1

① 

② 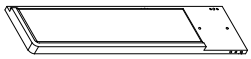

③ 

④

⑤

⑥

⑦ 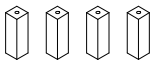

⑧ 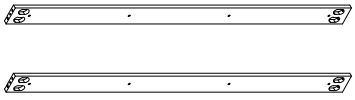

⑨ 

⑩ 

⑪

⑫ 

⑬ 

⑭ 

⑮ 

Unpack and place all part on a clean, non-marring surface

STEP 2

Attach Right Headboard Leg (①) Left Headboard Leg (②) Upper Headboard Support Rail (④) Middle Headboard Support Rail (⑤) Lower Headboard Support Rail (⑥) using Wooden dowel (Ⓒ) Bolts (Ⓐ) and Allen wrench (Ⓑ) to tighten it securely, as shown in the illustration

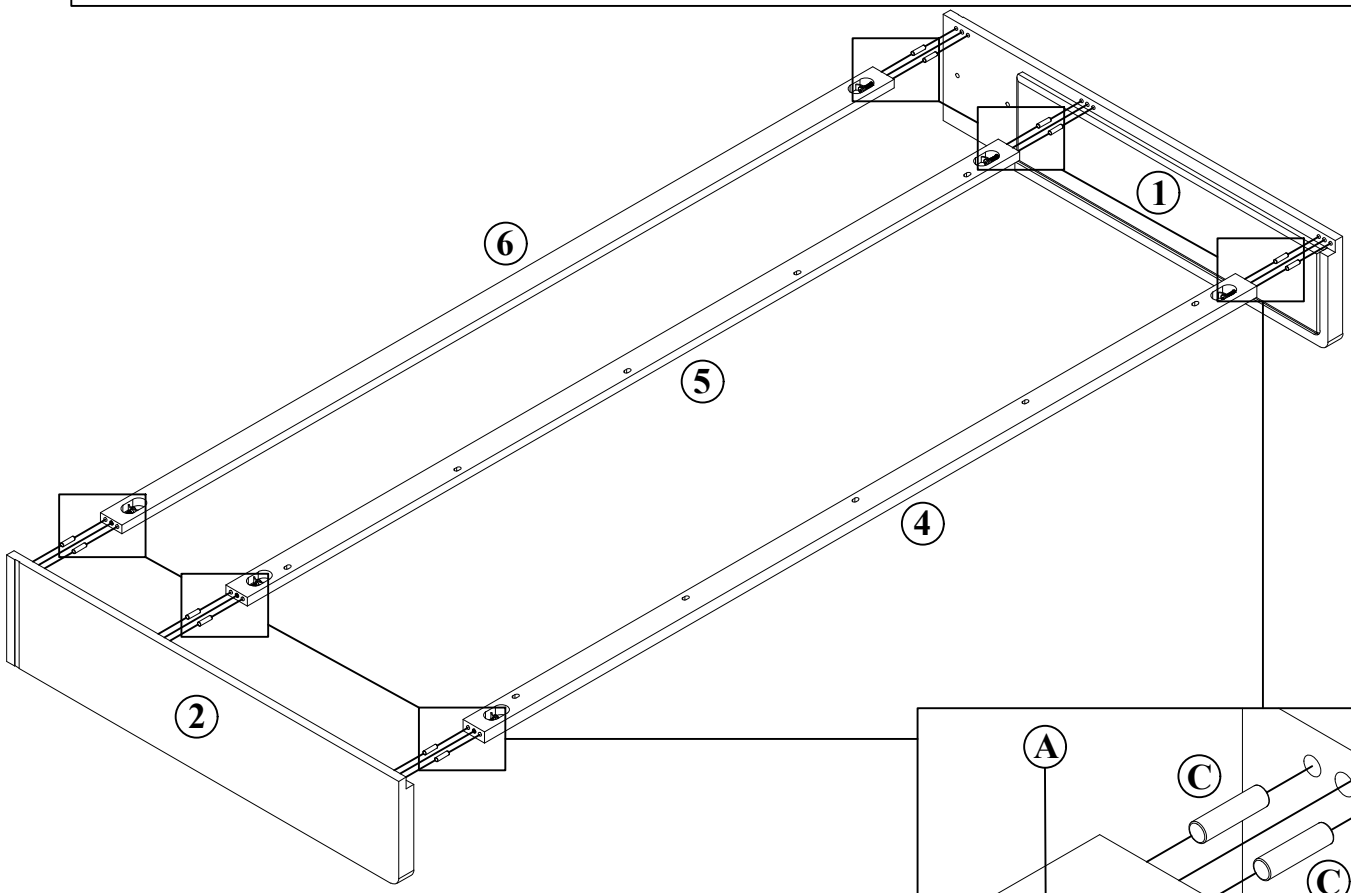

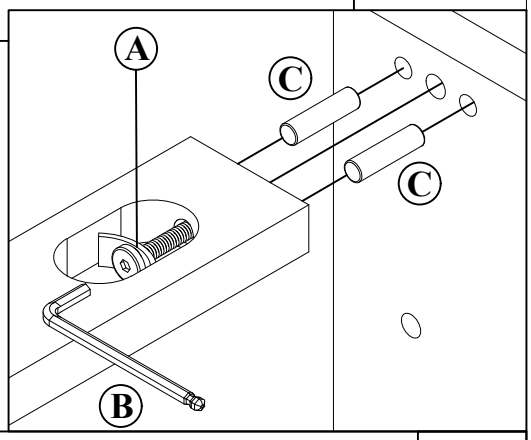

Ⓐ	Bolts 1/4*45mm / R30mm	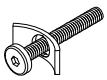	6PCS
Ⓒ	Wooden dowel Ø 8 * 30mm		12PCS

Ⓑ	Allen wrench	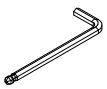	1PC

STEP 3

Attach upholstered footboard panel (⑭) Footboard panel (⑮) using Bolts + flat washer (Ⓓ) Wooden dowel (Ⓒ) and Allen wrench (Ⓑ) to tighten it securely, as shown in the illustration

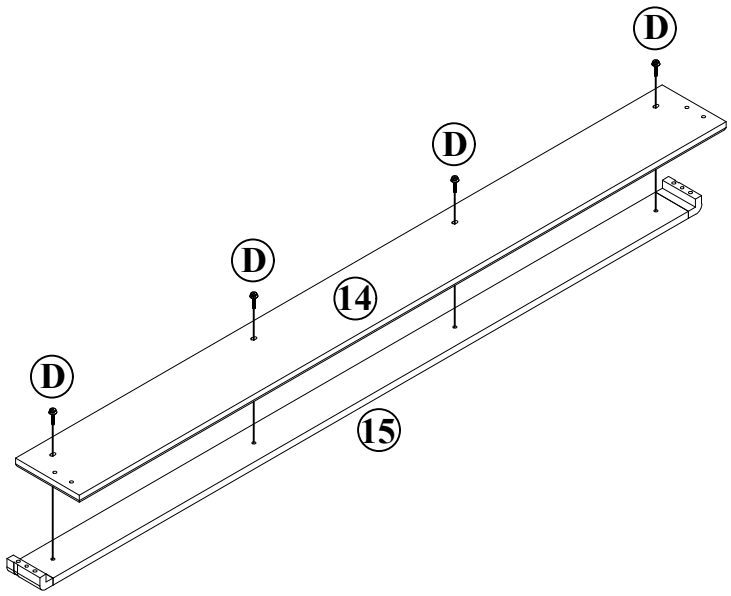

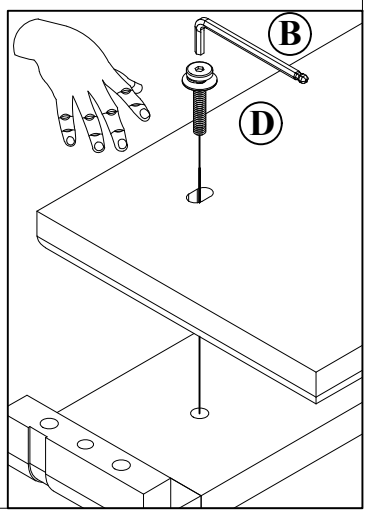

Use your hands to press down on the mattress as shown in the illustration to make assembly easier.

Ⓓ	Bolts + flat washer 1/4*30mm + 2*8*15mm		4PCS

STEP 4 Attach the assembly put together in step 2 and step 3 with Side rails (⑧) using Wooden dowel (Ⓒ) Bolts (Ⓐ) and Allen wrench (Ⓑ) to tighten it securely, as shown in the illustration

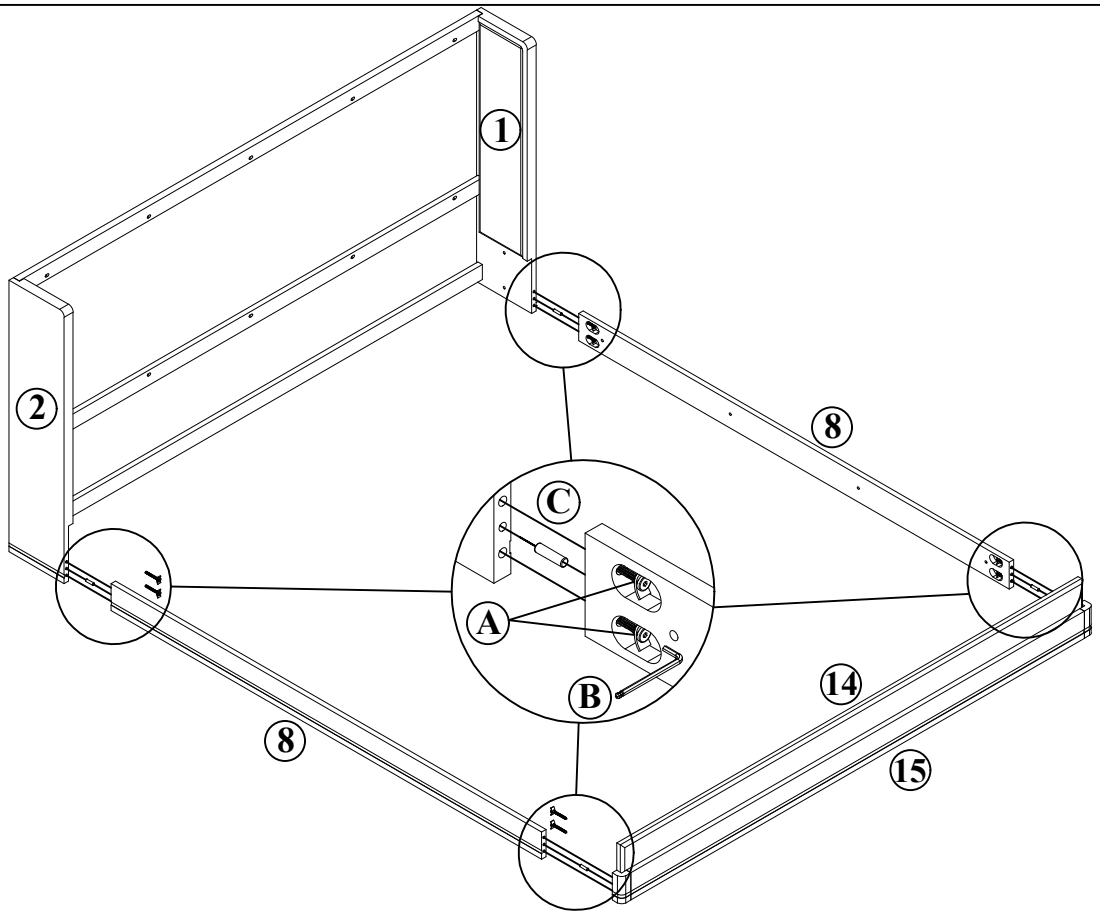

Ⓐ	Bolts 1/4*45mm / R30mm	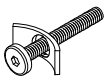	8PCS	Ⓒ	Wooden dowel Ø 8 * 30mm		4PCS

STEP 5 Attach the assembly put together in step 4 with Upholstered bed side rail (left) (⑨) Upholstered bed side rail (right) (⑩) using Bolts + flat washer (Ⓓ) and Allen wrench (Ⓑ) to tighten it securely, as shown in the illustration

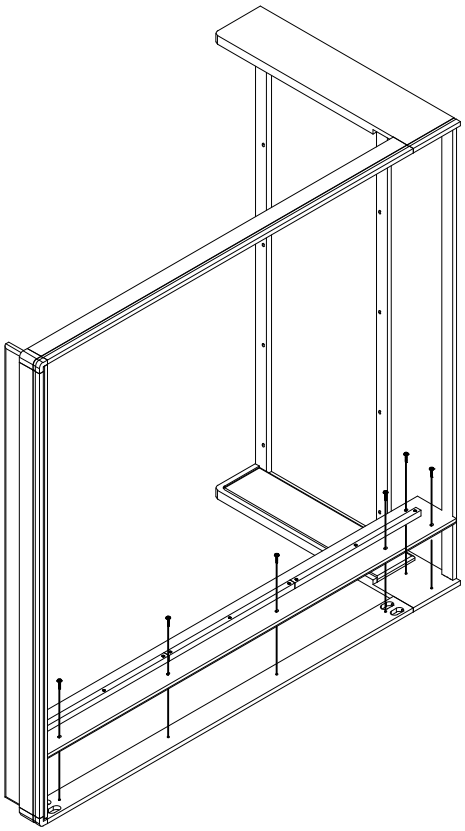

Side rails left

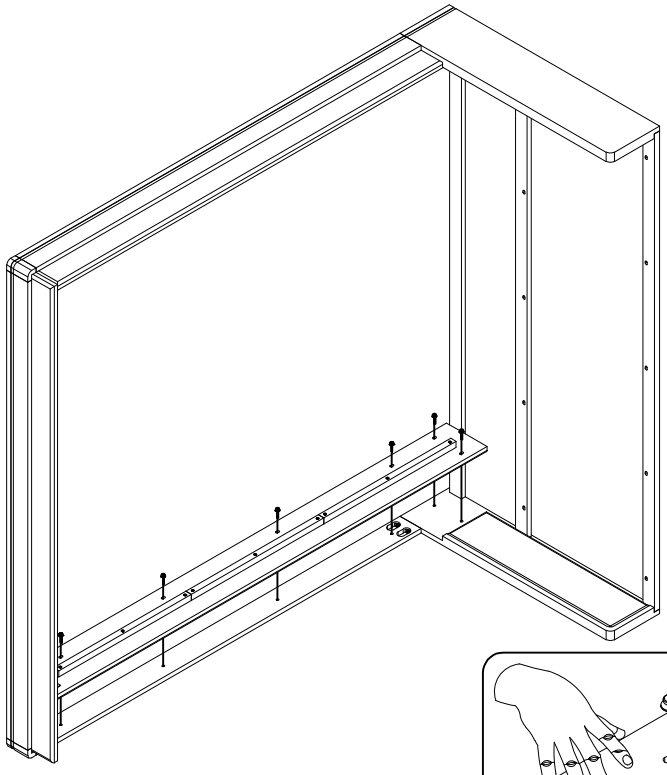

Side rails right

Ⓓ	Bolts + flat washer 1/4*30mm + 2*8*15mm		12PCS

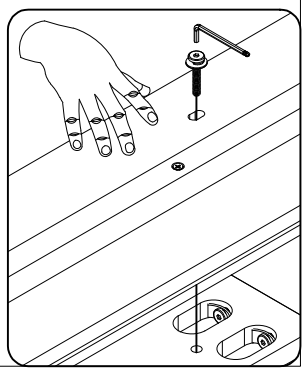

Use your hands to press down on the mattress as shown in the illustration to make assembly easier.

STEP 6

Attach the assembly put together in step 5 using Bolts + flat washer (Ⓔ) and Allen wrench (Ⓑ) to tighten it securely, as shown in the illustration

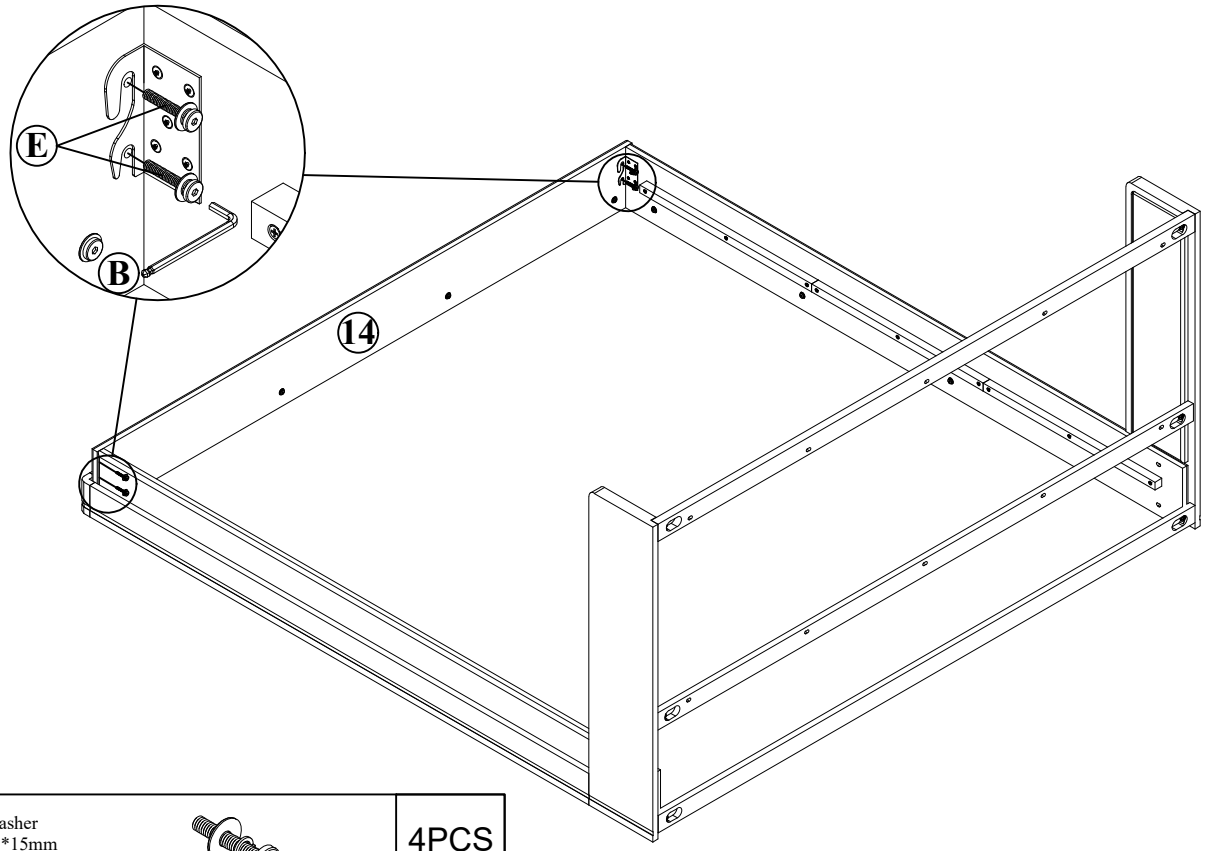

Ⓔ	Bolts + flat washer 1/4*15mm + 2*8*15mm		4PCS

STEP 7

Attach the assembly put together in step 6 using Bolts + flat washer (Ⓕ) Bolts + flat washer (Ⓖ) and Allen wrench (Ⓑ) to tighten it securely, as shown in the illustration

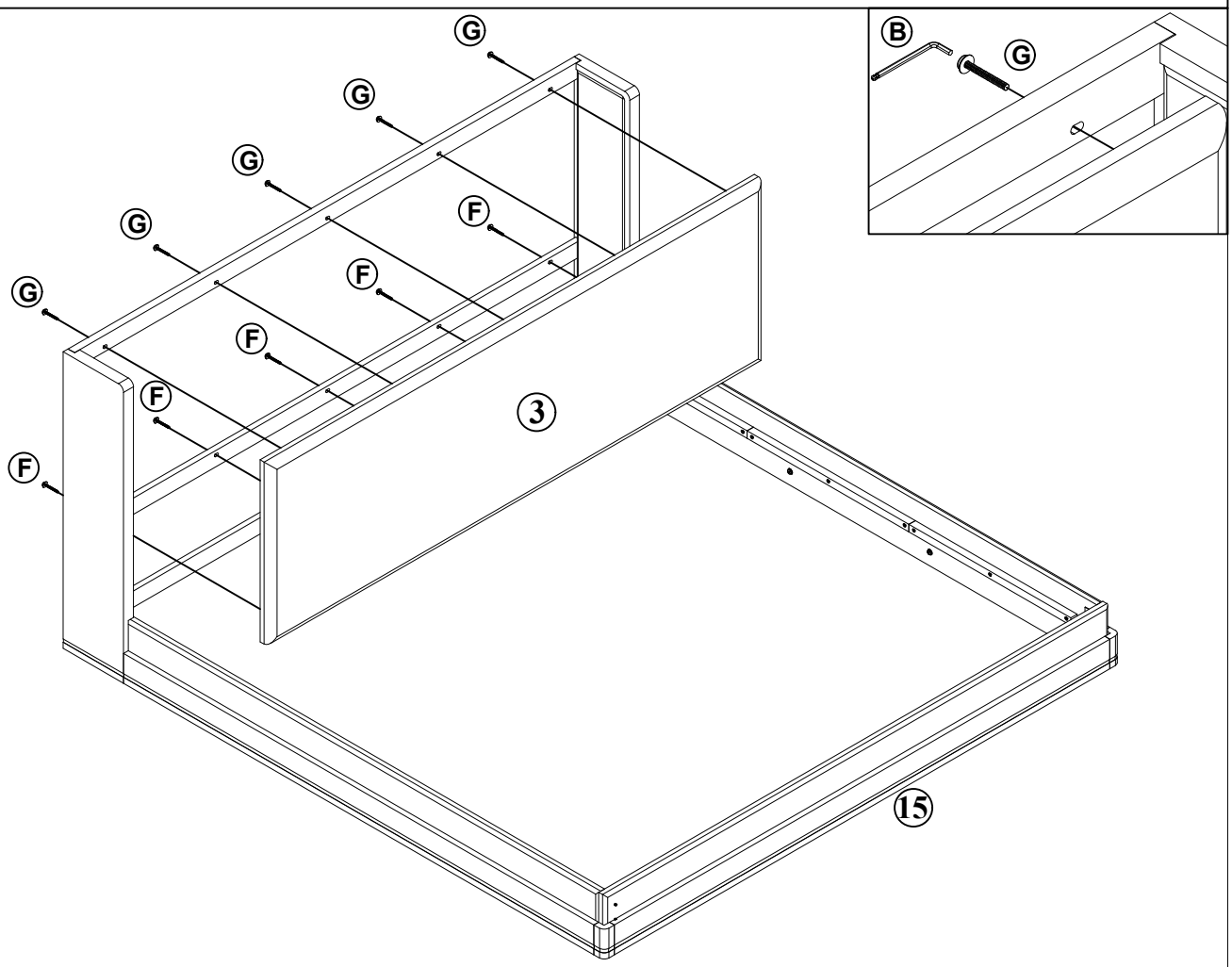

Ⓕ	Bolts + flat washer 1/4*35mm + 2*8*15mm		5PCS

Ⓖ	Bolts + flat washer 1/4*40mm + 2*8*15mm		5PCS

STEP 8

Attach Middle leg (⑦) Slats support (⑪) Slats 1 (⑫) using bolts (Ⓗ) and Allen wrench (Ⓑ) to tighten it securely, as shown in the illustration

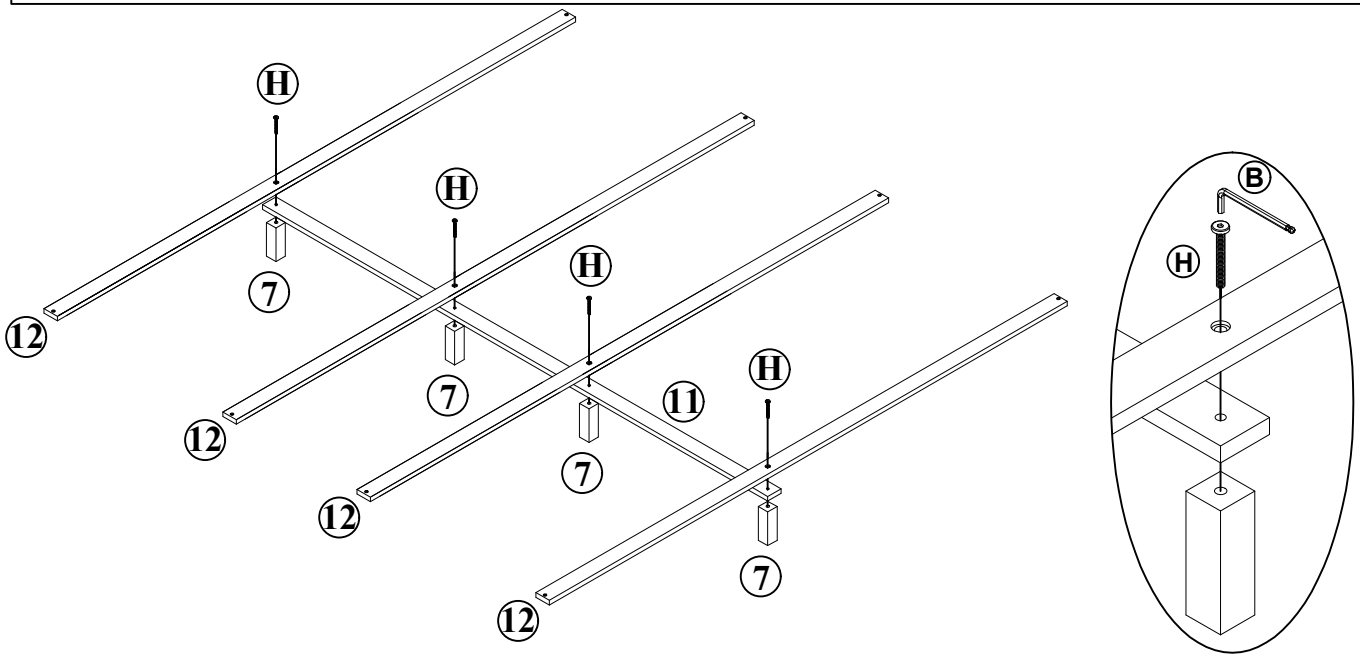

Ⓗ	Bolts 1/4*45mm 	4PCS

STEP 9

Attach the assembly put together in step 7 and steps 8 with slats 2 (⑬) using a screwdriver (not included) to tighten.

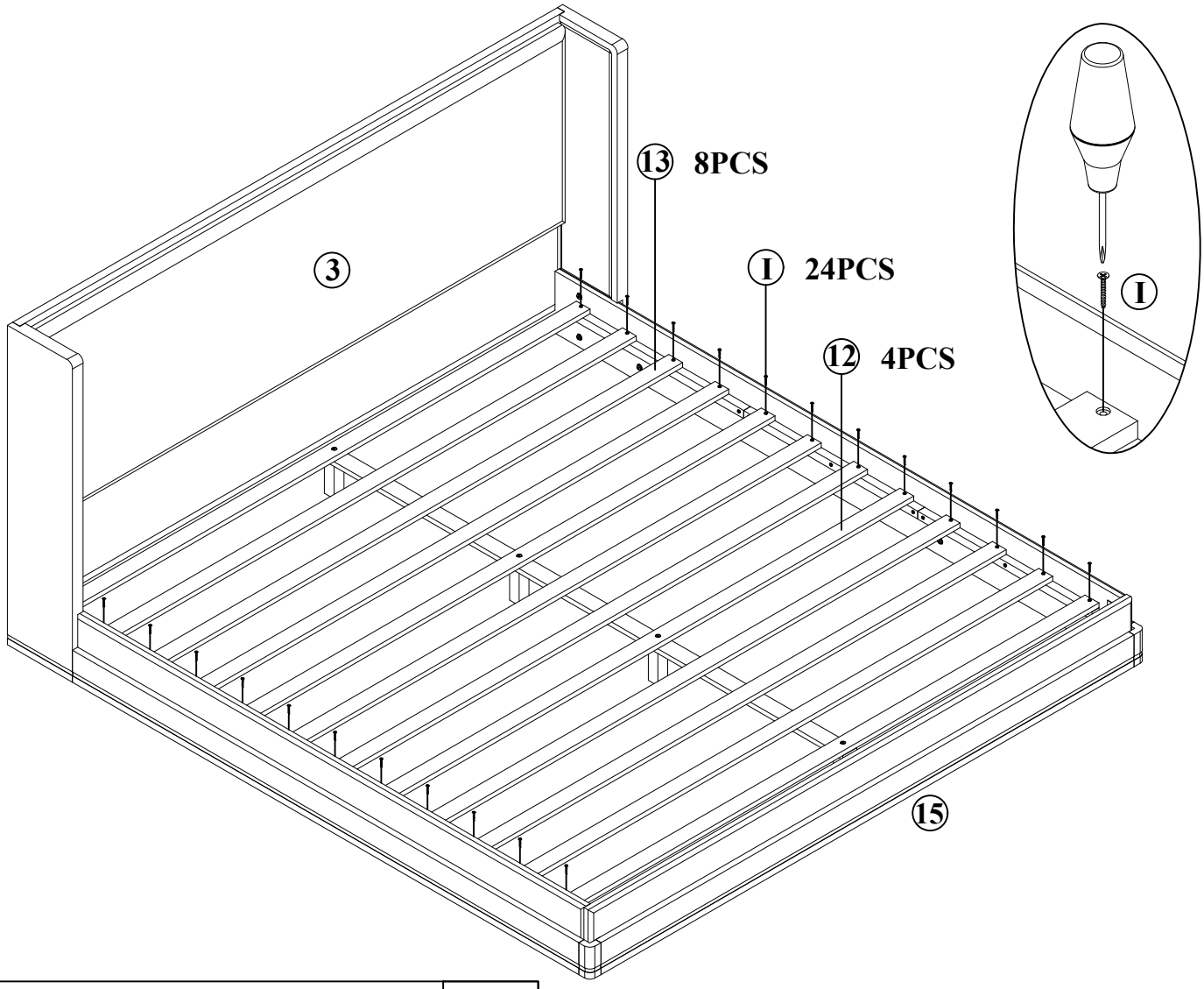

Ⓘ	Vis flat head 4*30 mm 	24PCS

COMPLETED

