Liberty Furniture
INDUSTRIES, INC

LIBERTY FURNITURE

ASSEMBLY INSTRUCTIONS

ITEM#: 171-OT1022
171NY-OT1022

DESCRIPTION: ROUND END TABLE

Thank you for purchasing this quality product. Be sure to check all packing material carefully for small parts which may have come loose inside the carton during shipment. Identify and count all parts and compare with the parts list below:

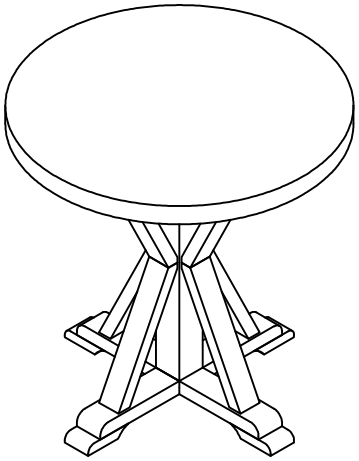

8

ASSEMBLY HARDWARE PACK

NO.	SKETCH	HARDWARE	Q'TY
A	$\frac{1}{4}$" x 40mm	BOLT	14 PCS
B	$\frac{5}{16}$" x 13mm	LOCK WASHER	14PCS
C	$\frac{5}{16}$" x 19mm	FLAT WASHER	14PCS
D	4mm	ALLEN KEY	1PC
E	ϕ10 x 30mm	WOODEN PEGS	4PCS

PARTS LIST

NO.	SKETCH	DESCRIPTION	Q'TY
1		TABLE TOP	1 PC
2		MOUNTING PLATE TOP	1 PC
3		MOUNTING PLATE BOTTOM	1 PC
4		PEDESTAL POST	1 PC
5		STRETCHER	4 PCS
6		TOP BASE	1 PC
7		BOTTOM BASE	1 PC

STEP 1

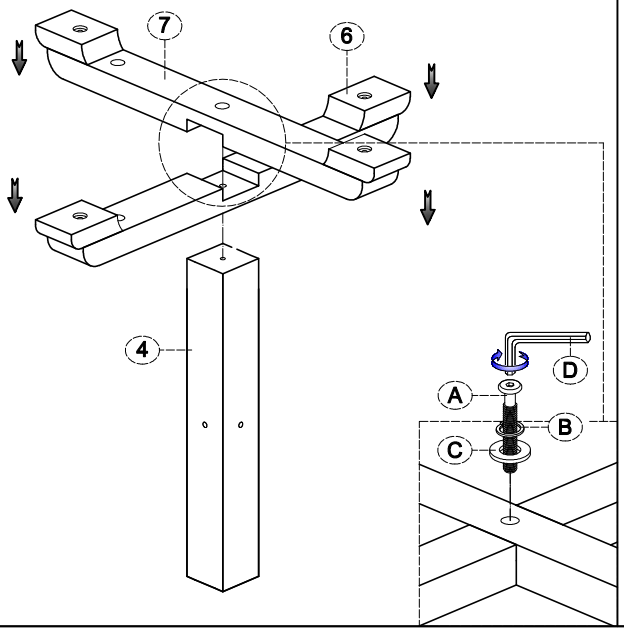

STEP 2

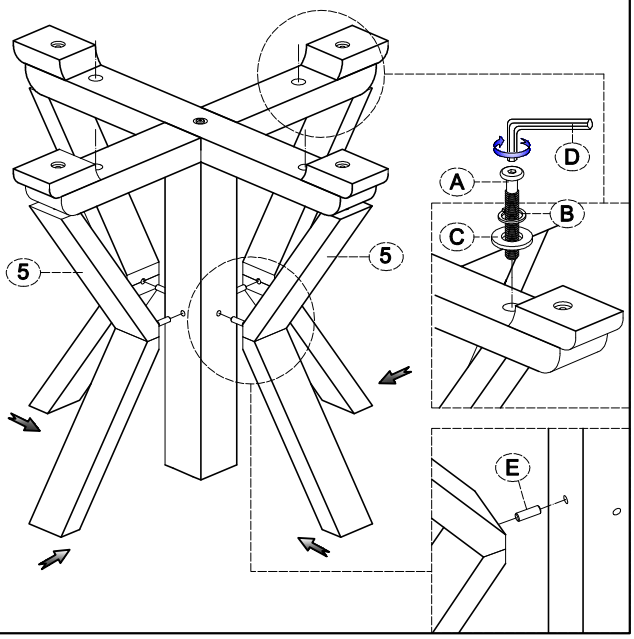

MADE IN VIETNAM

STEP 3

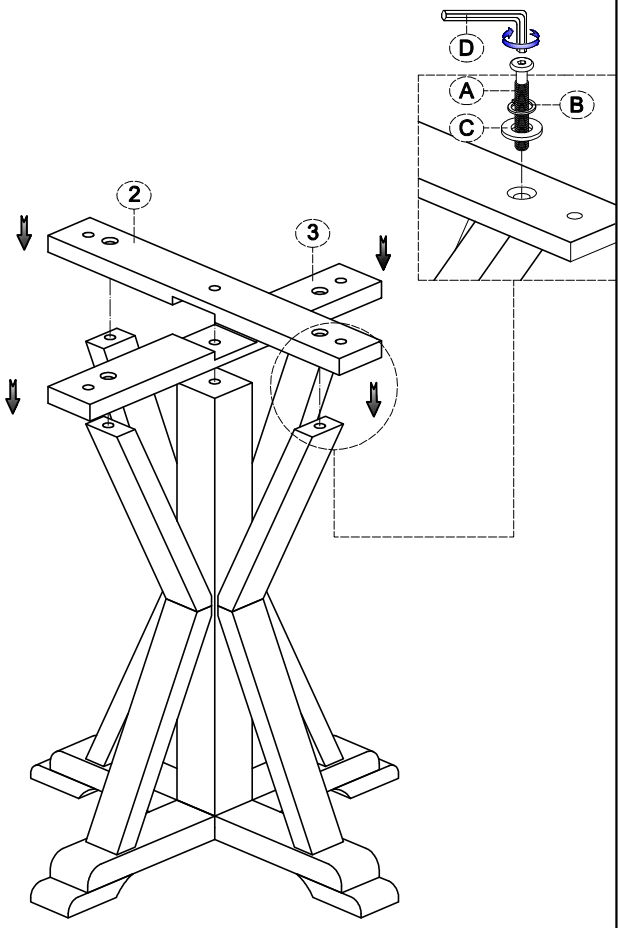

STEP 4

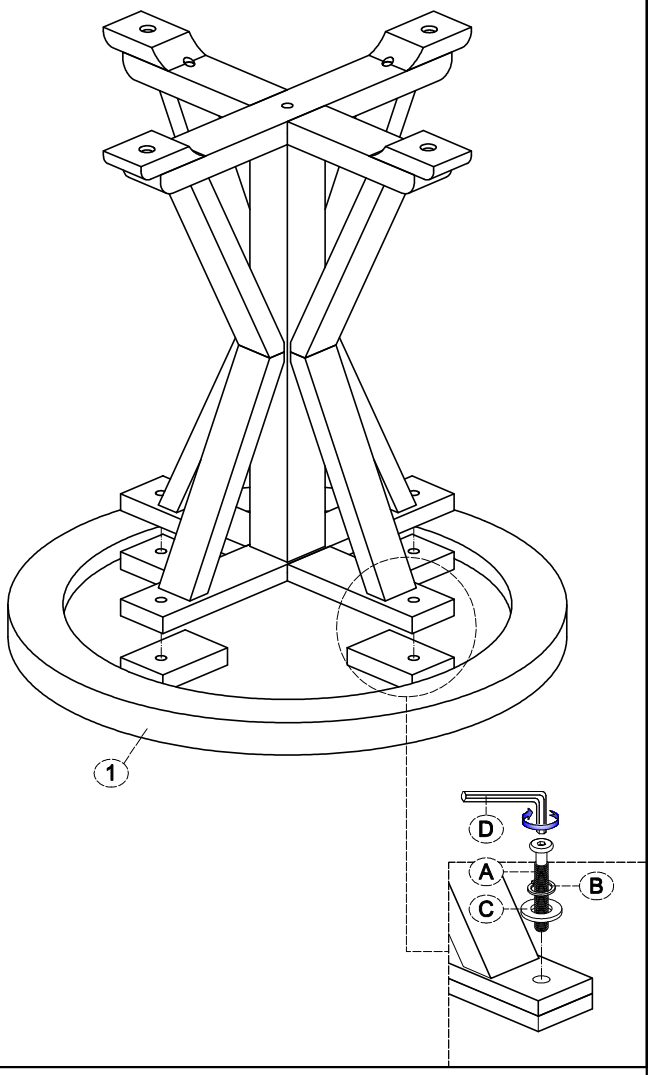

COMPLETE

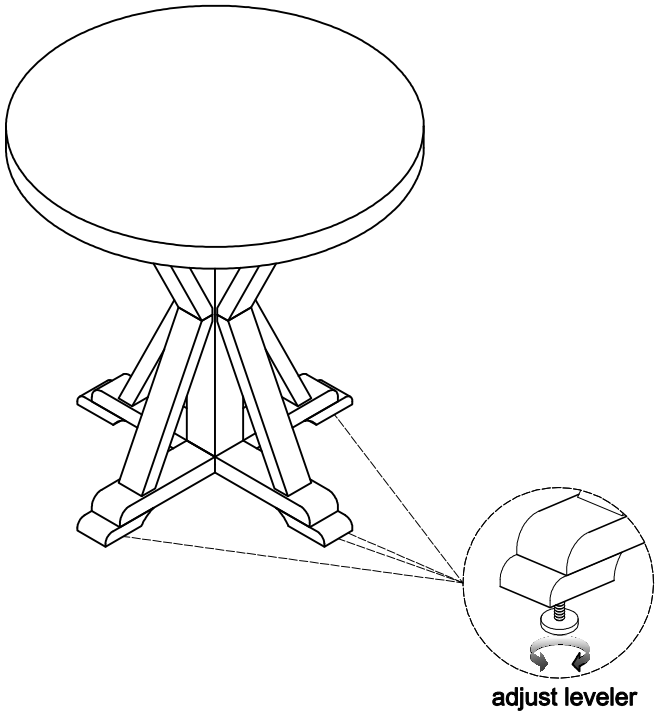

MADE IN VIETNAM