INSTALLATION

Product Manual

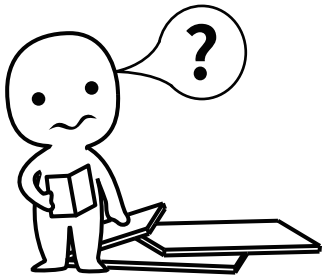

IMPORTANT INFORMATION!

please read the entire manual before starting to assemble and/or using this product.follow the manual thoroughly and keep it for further reference.

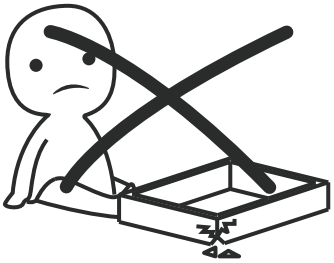

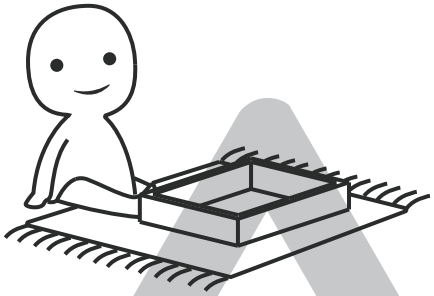

AVOID SCRATCHES!

In order to avoid scratching this furnuture should be assembled on a soft layer-could be a rug.

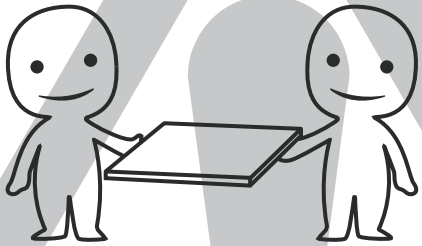

IMPROVE EFFICIENCY !

Try to find a partner to install with you, which can speed up the installation efficiency and shorten the time.

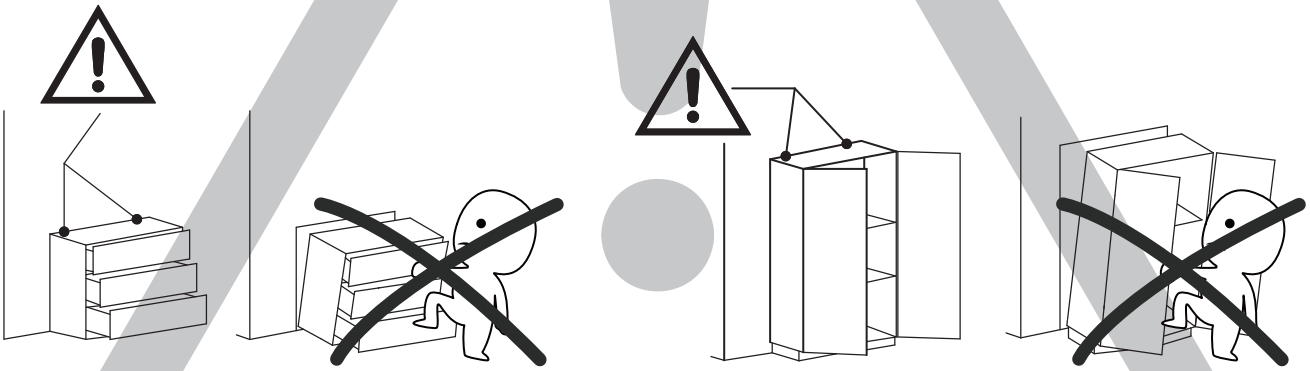

ANTI-TOPPLE WARNING !

Overturned furniture can cause serious or fatal crush injuries. To prevent tipping over, be sure to use the wall attachment, if not included with this product. Please purchase the wall attachment that fit your wall. If unsure, seek professional advice. Please read and follow each step of the instructions carefully.

IMPORTANT !

It is important that any product which is assembled using any kind of screw is re-tightened 2 weeks after assembly,and once every 3 months - in order to assure stability through-out the lifespan of the product.

For regular maintenance and cleaning of the product, for the frame, please use a rag dipped in neutral detergent to fully wipe it, and then dry it with a clean rag.For glass materials, wipe with a rag dampened with water glass cleaner, and then dry with a dry rag.

Do not use an electric screwdriver, and do not use too much force when installing, because the board is easy to break.

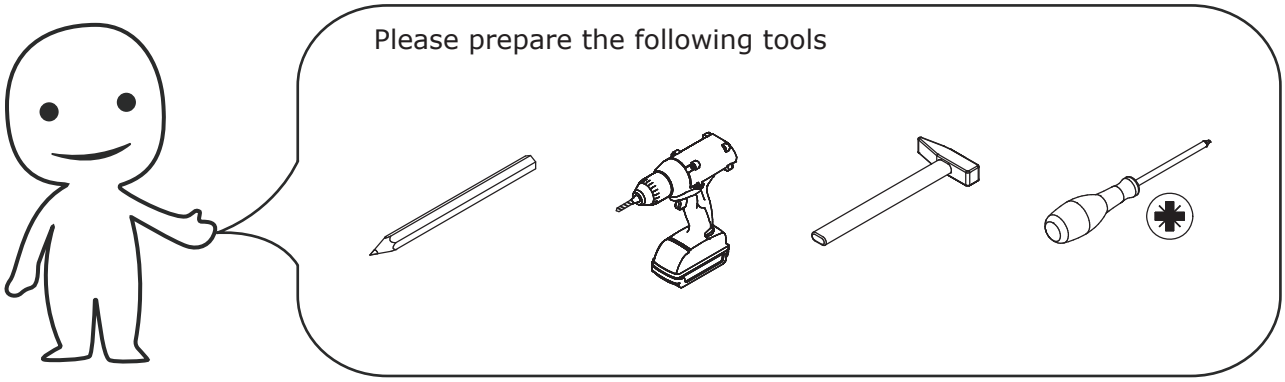

When installing, please carefully confirm whether each screw corresponds to the manual, accessories with similar shapes can be distinguished by size

A x 91	B x 56	C x 91	D x 86	E x 60
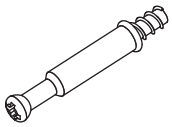 ∅6 x 35 mm	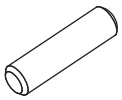 ∅6 x 30 mm	∅15 x 10 mm	∅3 x 12 mm	∅4 x 30 mm
F x 24	G x 2	H x 28	J x 28	K x 2
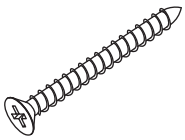 ∅5 x 40 mm	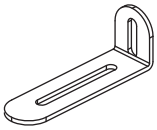 75 x 25 x 15 mm		∅3 x 16 mm	∅4 x 14 mm
L x 5	M x 5	N x 2	CL x 2	CR x 2
	∅4 x 16 mm	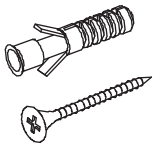	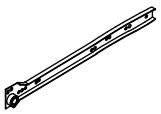 200 mm	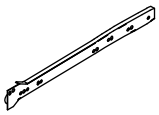 200 mm
DL x 2	DR x 2	CL x 7	CR x 7	DL x 7
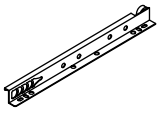 200 mm	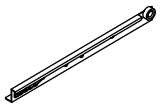 200 mm	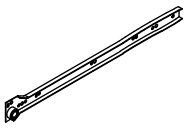 350 mm	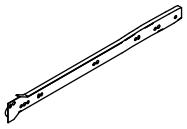 350 mm	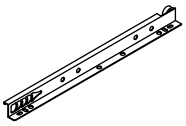 350 mm
DR x 7				
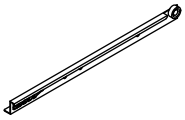 350 mm				

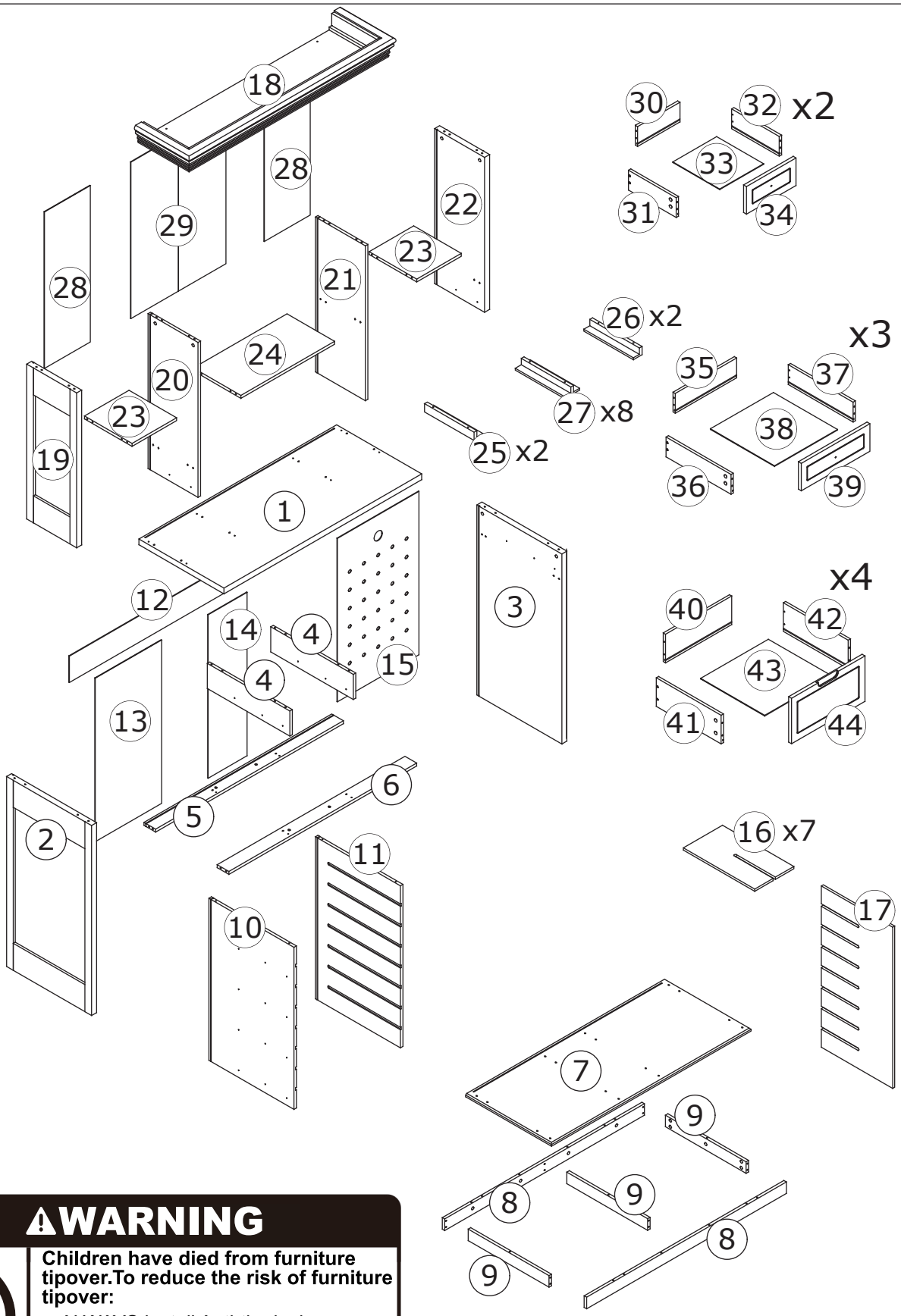

⚠WARNING

Children have died from furniture tipover.To reduce the risk of furniture tipover:

- ALWAYS install Anti-tip device provided.
- NEVER put a TV on this product.
- NEVER allow children to stand,climb or hang on drawers,doors,or shelves.
- NEVER open more than one drawer at a time.
- Place heaviest items in the lowest drawers.

This is a permanent label.
Do not remove!

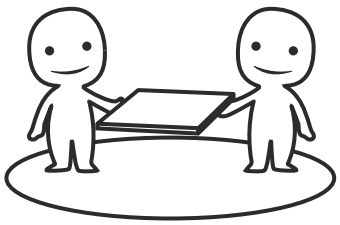

ASSEMBLED BY 2 ADULTS

1

D x 6	CL x 2	
∅3 x 12 mm	350 mm	

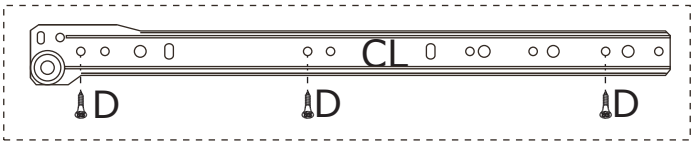

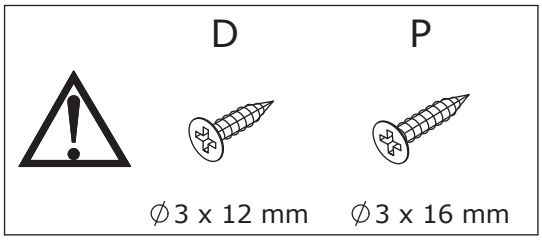

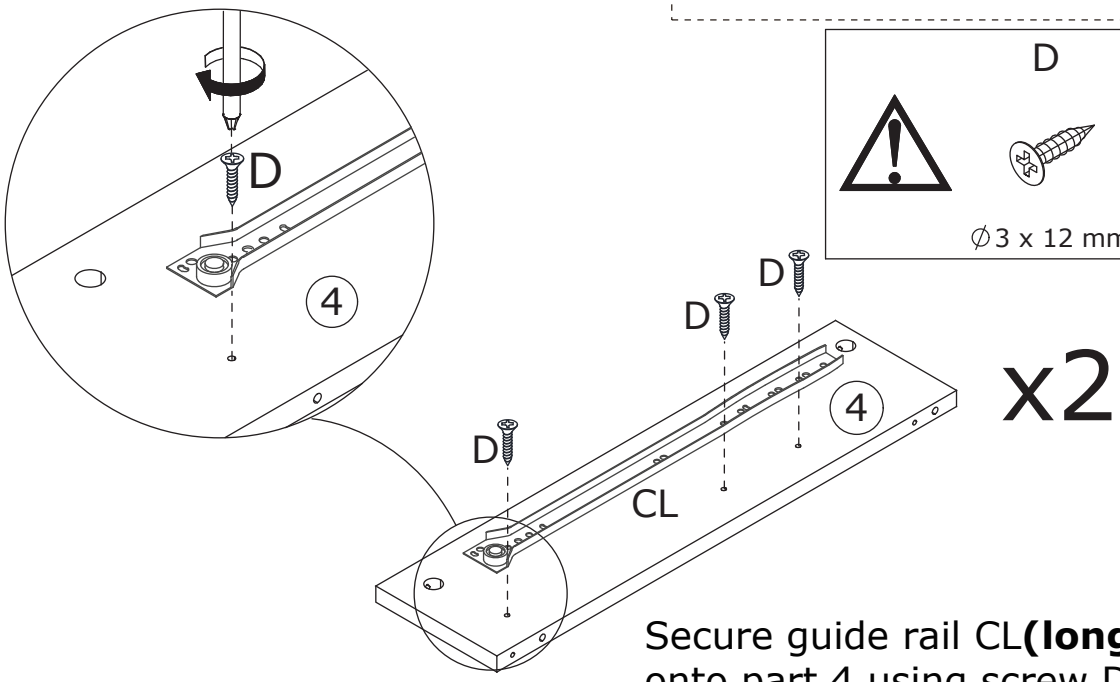

Secure guide rail CL**(long)** onto part 4 using screw D.

2

D x 6	CR x 2	
∅3 x 12 mm	350 mm	

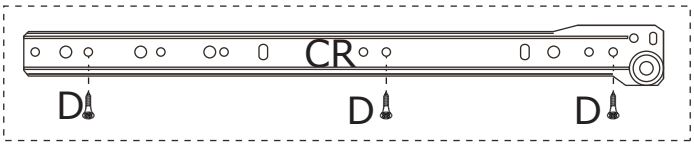

Flip to the other side, secure guide rail CL onto part 4 using screw D.

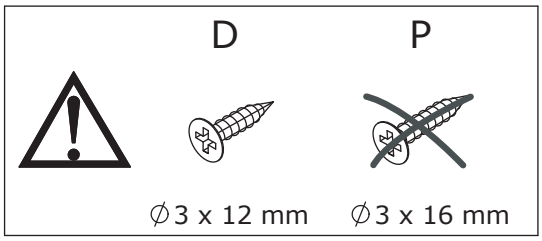

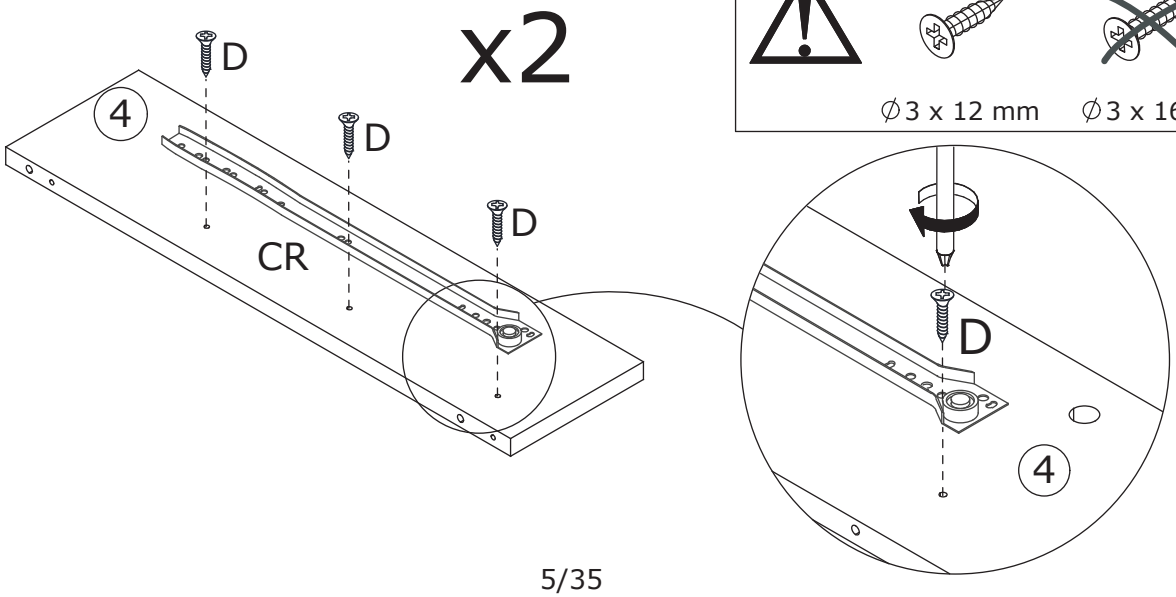

3

B x 4	F x 4	
∅6 x 30 mm	∅5 x 40 mm	

	F	E
	∅ 5 x 40 mm	∅ 4 x 30 mm

Connect part 4 to part 5 and 6 using wooden dowel B and screw F.

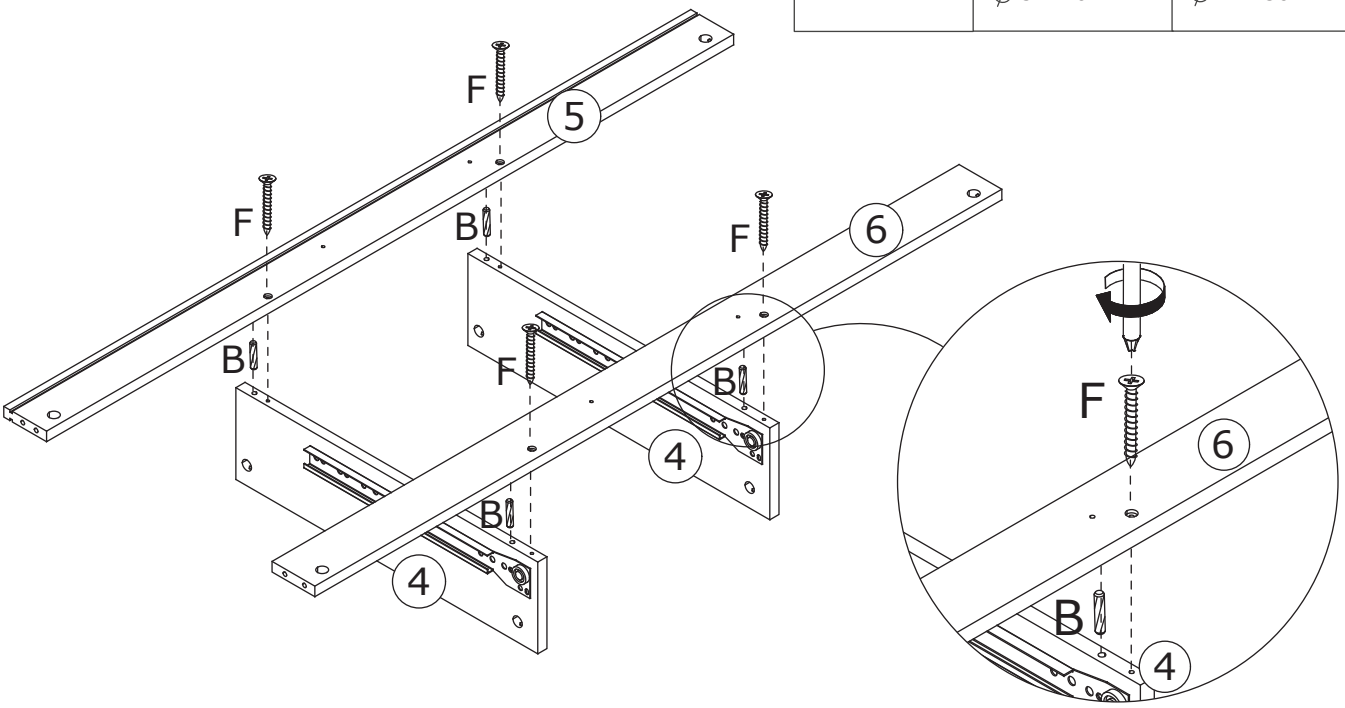

4

D x 12	CR x 4	
∅3 x 12 mm	350 mm	

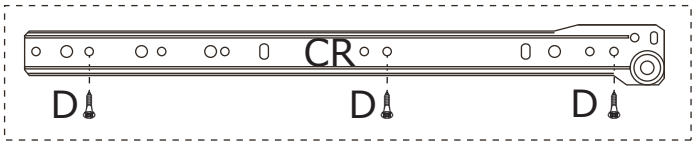

	D	P
	∅3 x 12 mm	∅3 x 16 mm

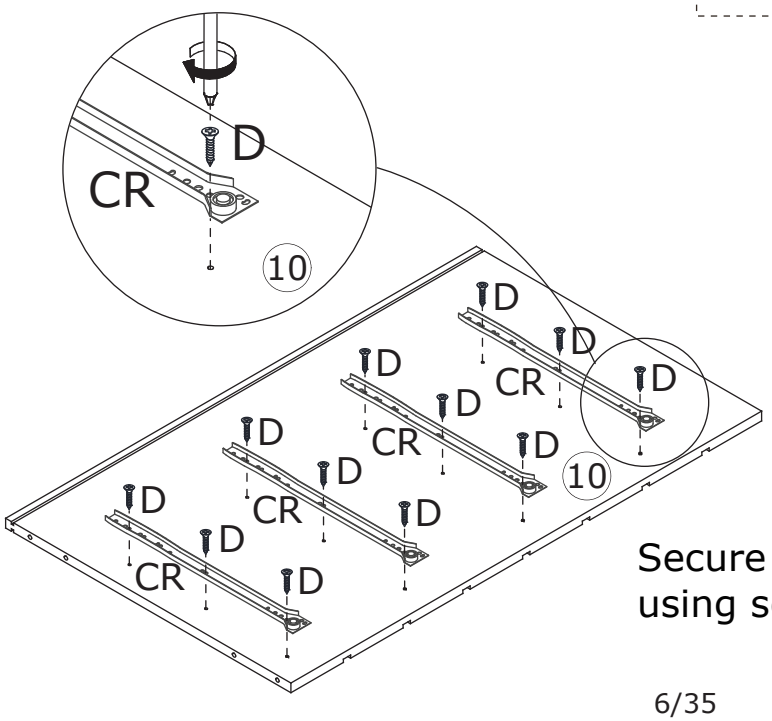

Secure guide rail CR onto part 10 using screw D.

5

F x 4	
∅5 x 40 mm	

	F	E
	∅ 5 x 40 mm	∅ 4 x 30 mm

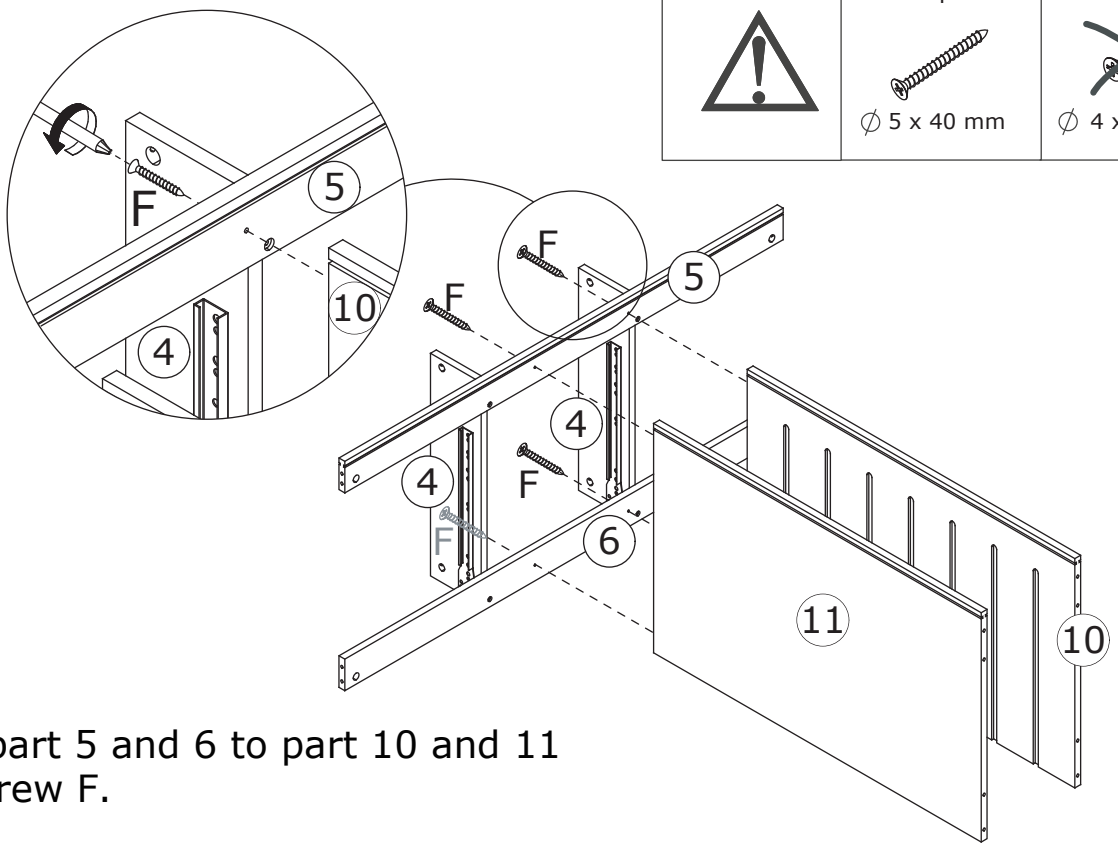

Secure part 5 and 6 to part 10 and 11 using screw F.

6

A x 2	D x 15	CL x 5	
∅6 x 35 mm	∅3 x 12 mm	350 mm	

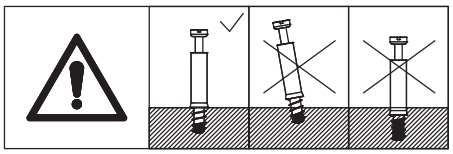

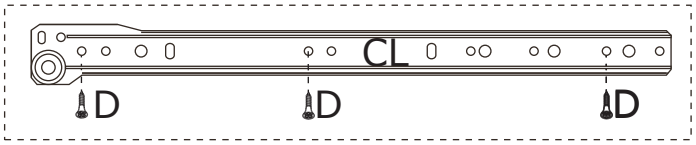

	D	P
	∅3 x 12 mm	∅3 x 16 mm

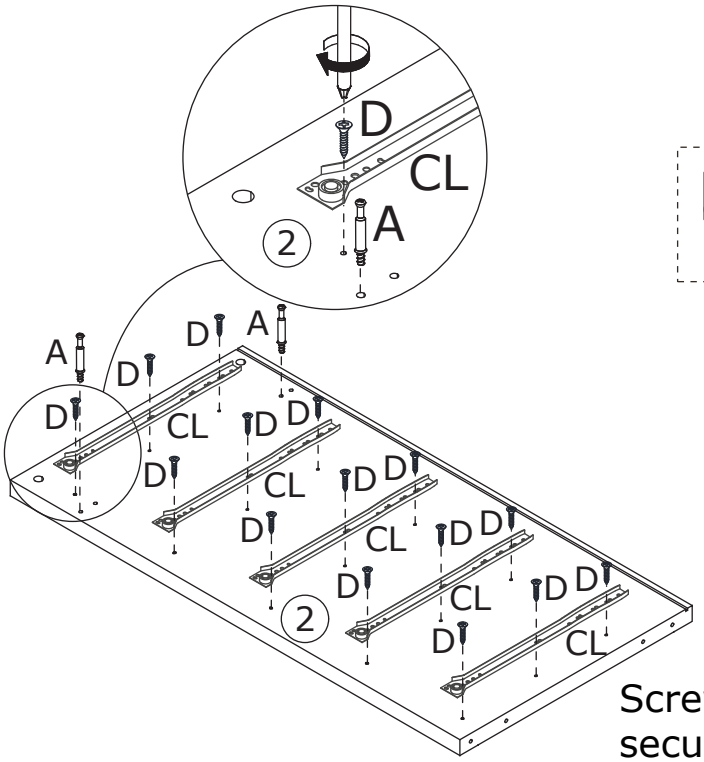

Screw eccentric rod A onto part 2, and secure guide rail CL using screw D.

7

A x 2	D x 3	CR x 1
∅6 x 35 mm	∅3 x 12 mm	350 mm

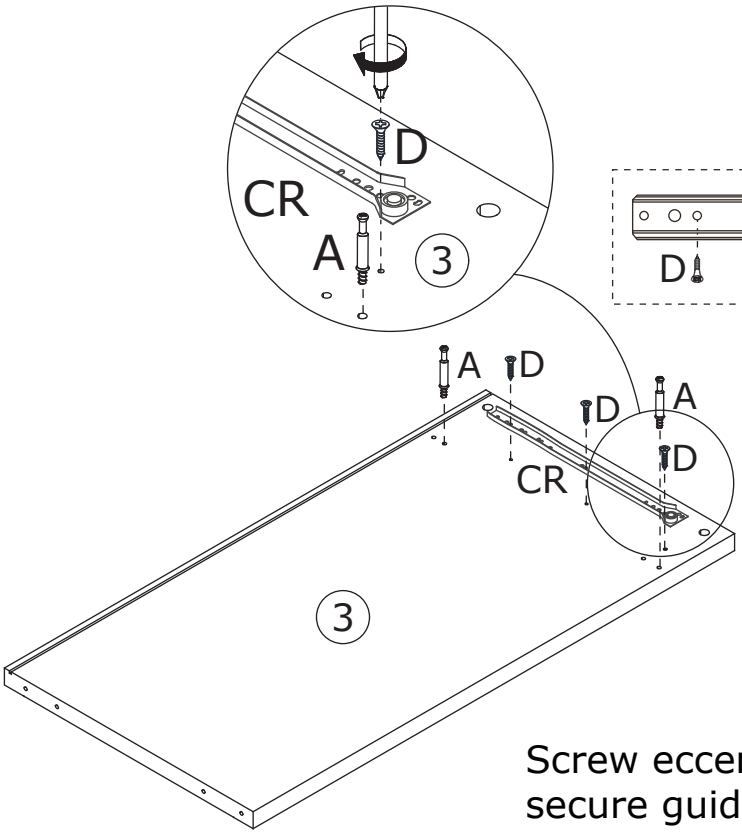

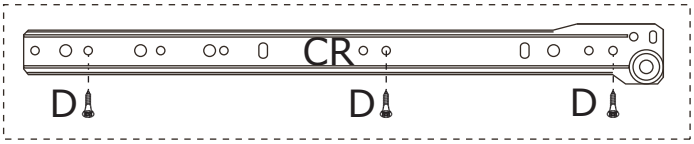

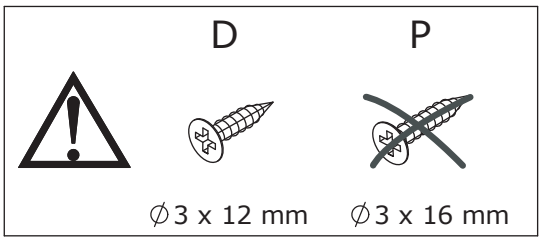

Screw eccentric rod A onto part 3, and secure guide rail CR using screw D.

8

B x 4	C x 4
∅6 x 30 mm	∅15 x 10 mm

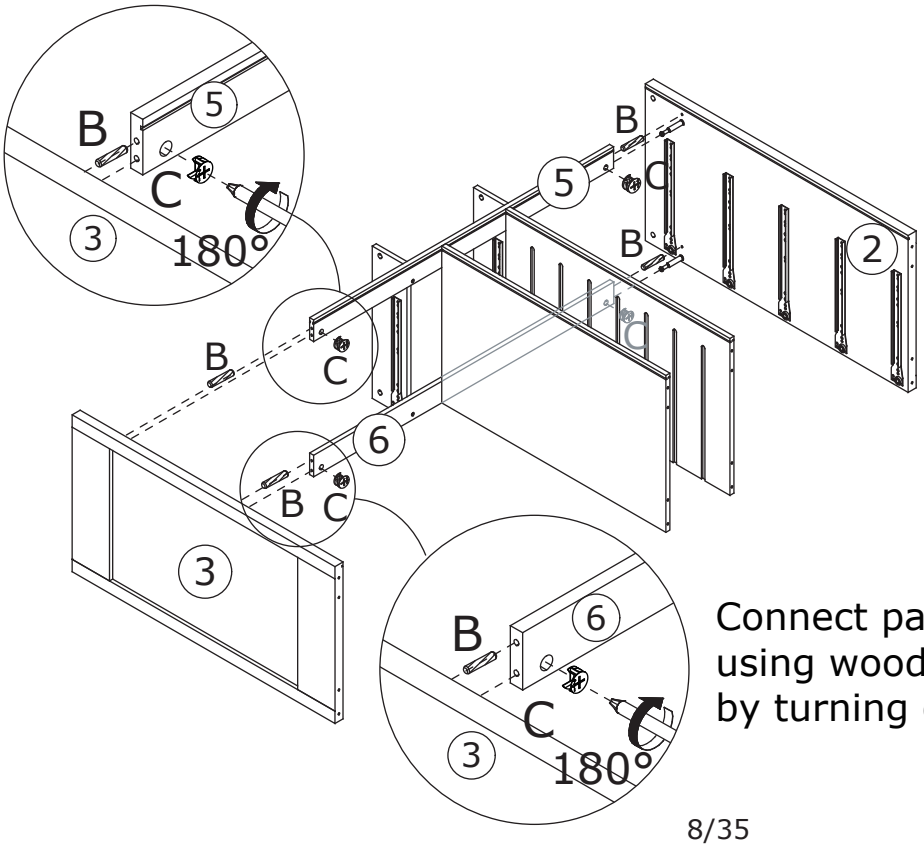

Connect part 3 to part 5 and 6 using wooden dowel B, then tighten by turning cam lock C clockwise.

9

Insert part 13, 14, 15 along the available slots.

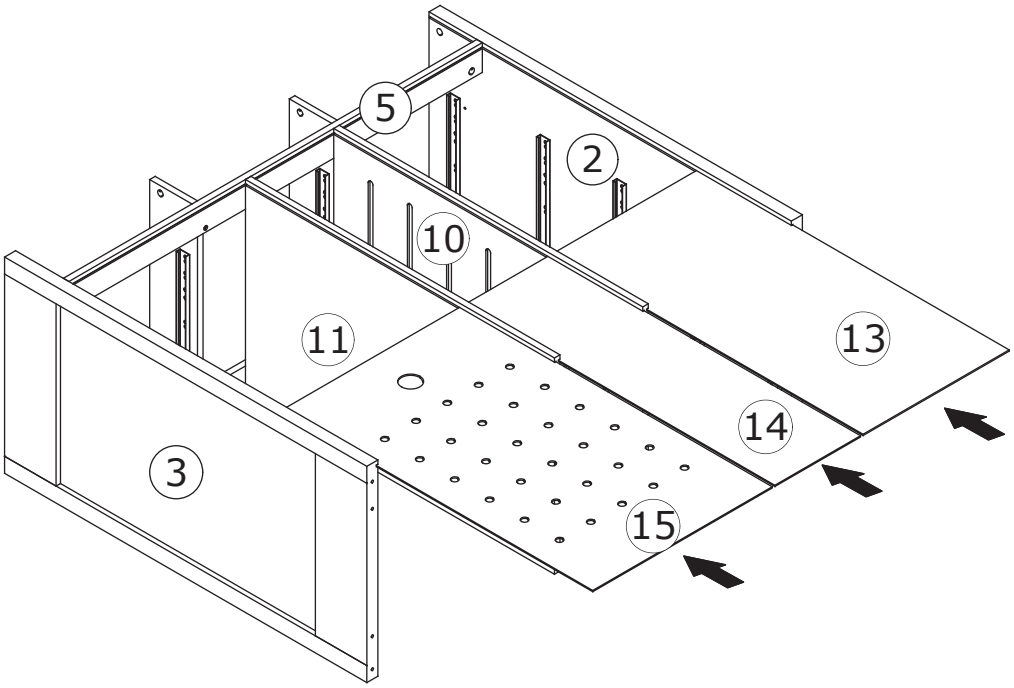

10

A x 11

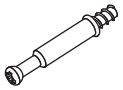

∅6 x 35 mm

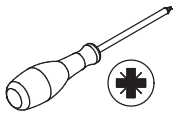

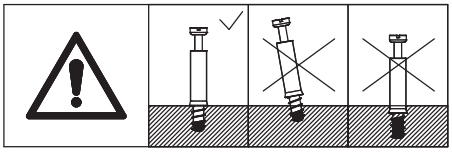

Screw eccentric rod A onto part 7.

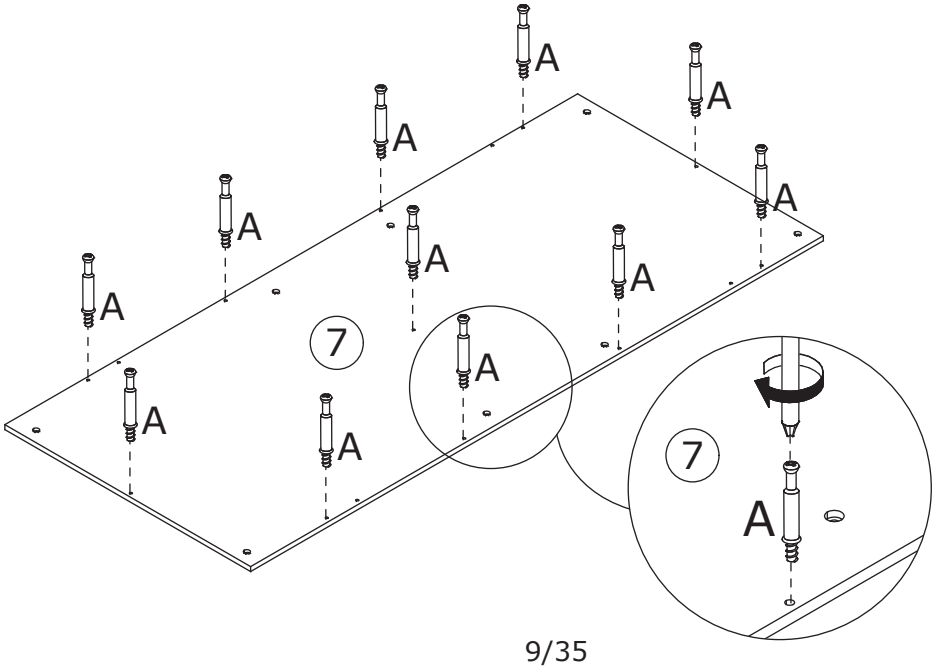

11

B x 8	F x 8	
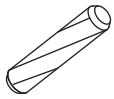	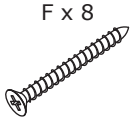	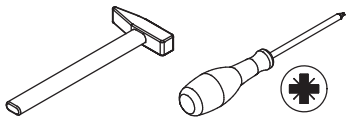
∅6 x 30 mm	∅5 x 40 mm	

Connect part 7 to part 2, 10, 11 and 3 using wooden dowel B and screw F.

	F	E
	∅ 5 x 40 mm	∅ 4 x 30 mm

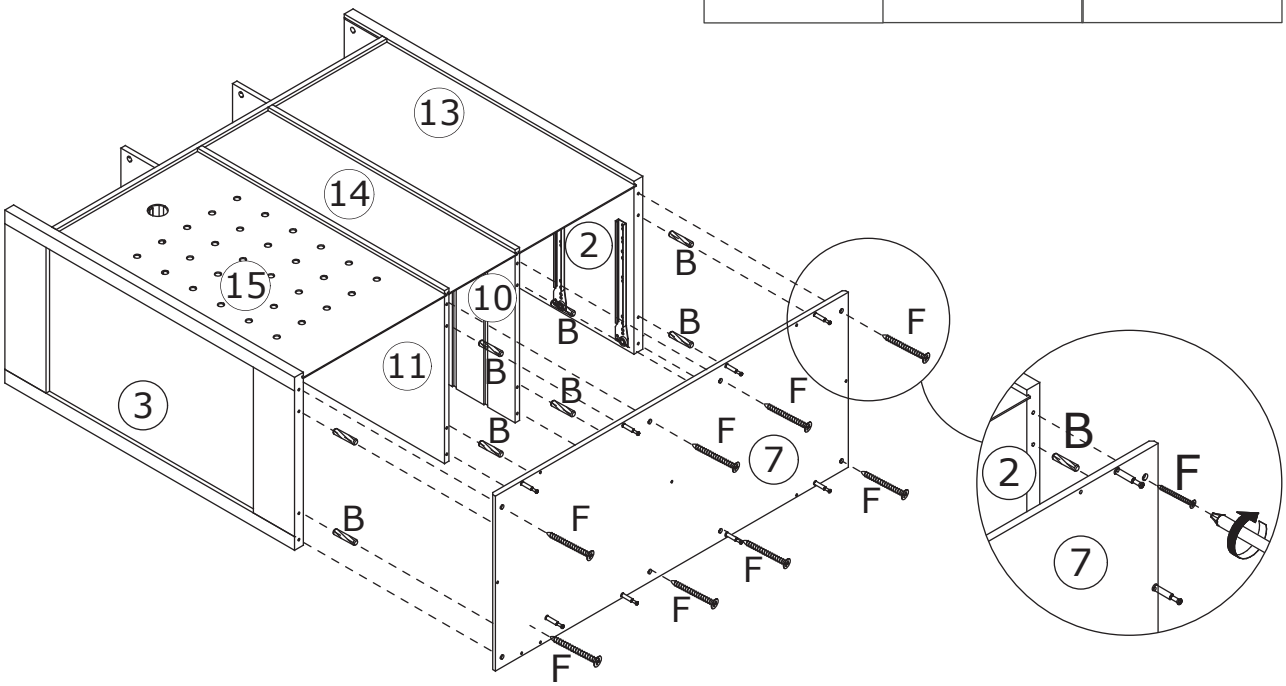

12

A x 12	
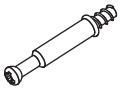	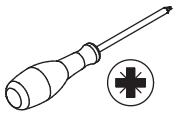
∅6 x 35 mm	

Screw eccentric rod A onto part 8.

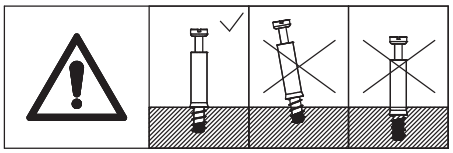

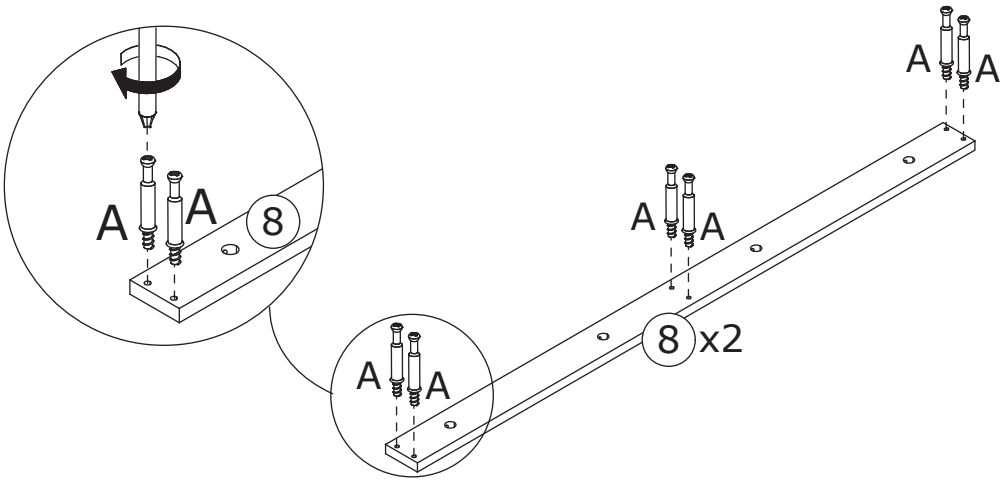

13

C x 12
∅15 x 10 mm

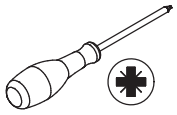

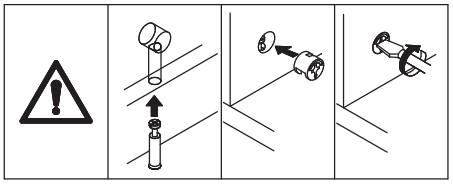

Connect part 8 to part 9, then tighten by turning cam lock C clockwise.

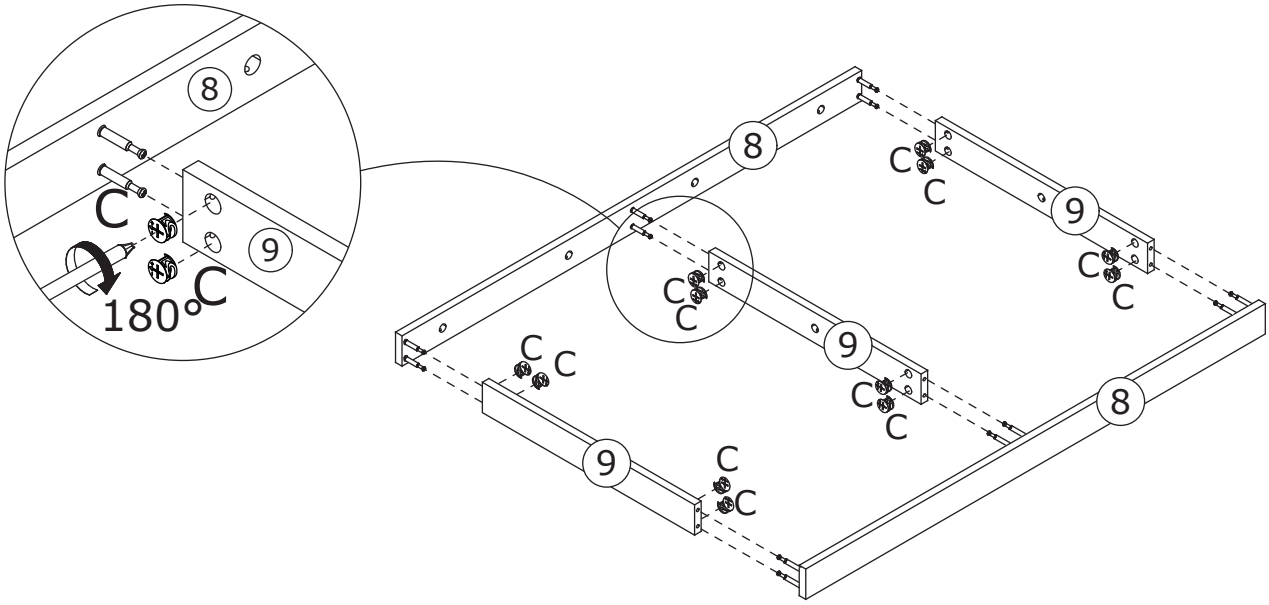

14

B x 4	C x 11
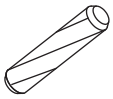	
∅6 x 30 mm	∅15 x 10 mm

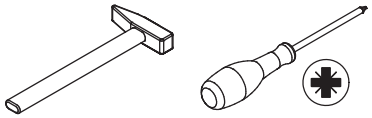

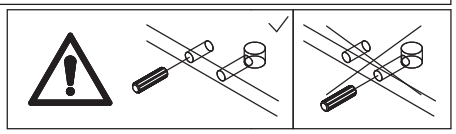

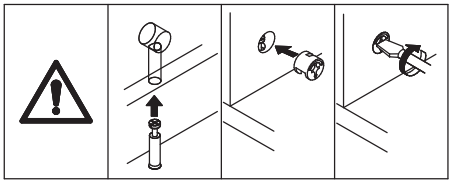

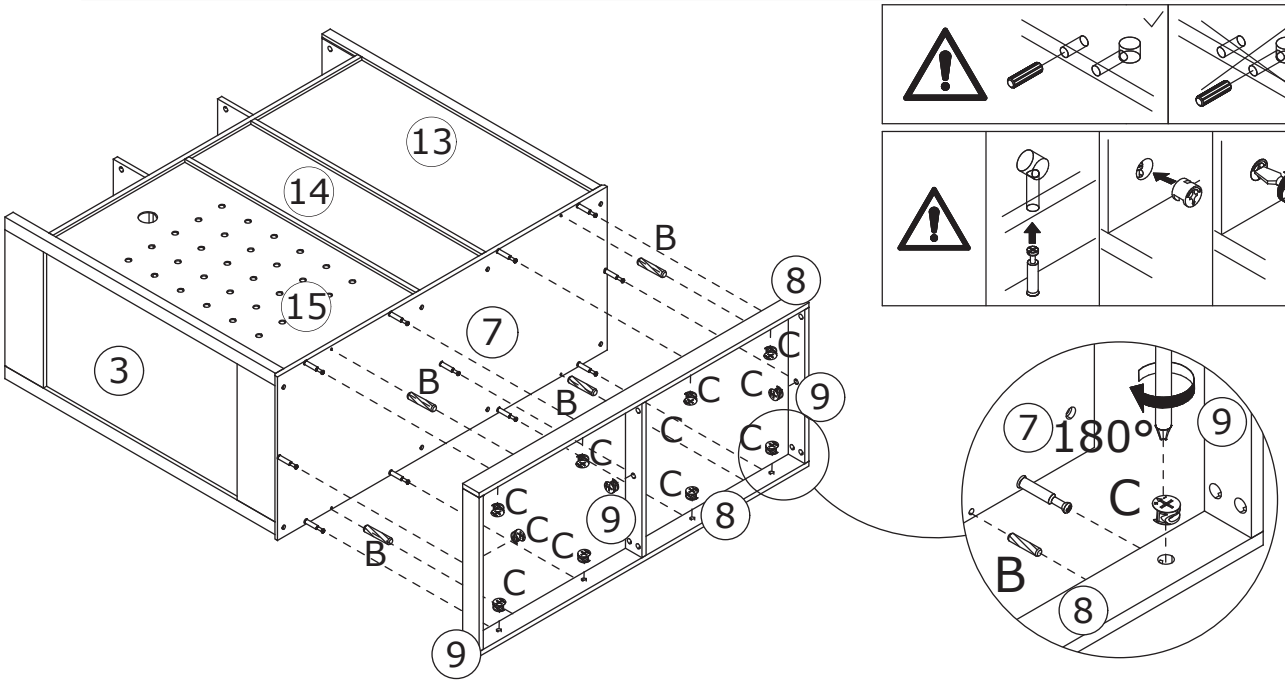

Connect the component to part 7 using wooden dowel B, then tighten by turning cam lock C clockwise.

15

Insert part 16 into part 10 and 11.

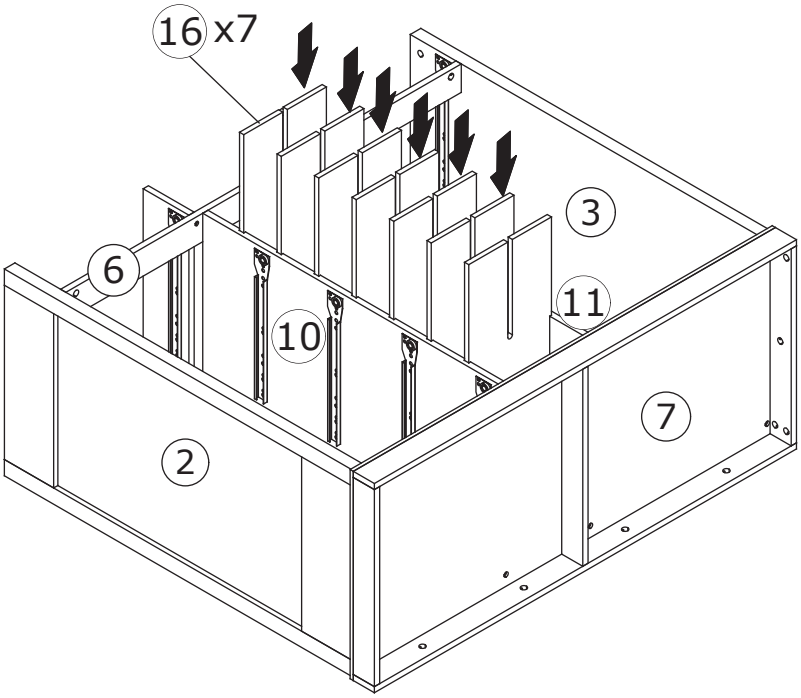

16

Insert part 17 into part 16.

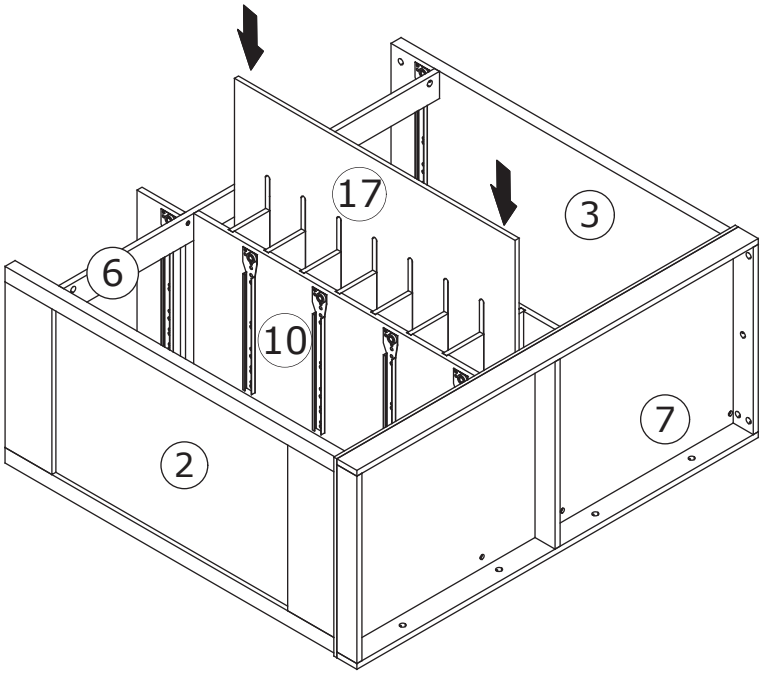

17

Insert part 12 along the available slots.

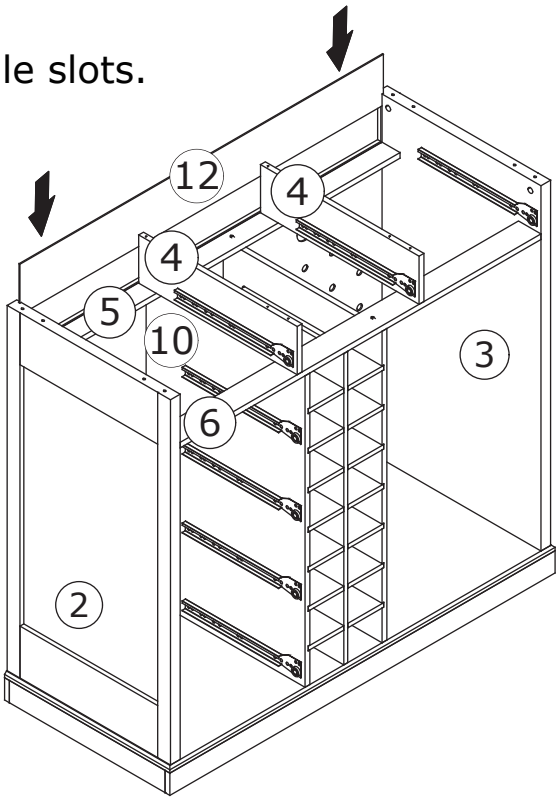

18

A x 2	D x 2	CL x 1	
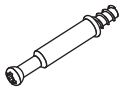		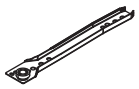	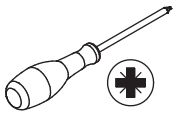
∅6 x 35 mm	∅3 x 12 mm	200 mm	

Screw eccentric rod A onto part 21, and secure guide rail CL**(short)** using screw D.

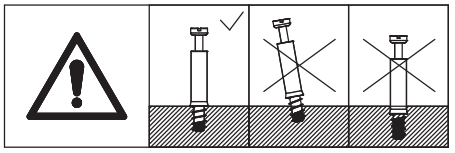

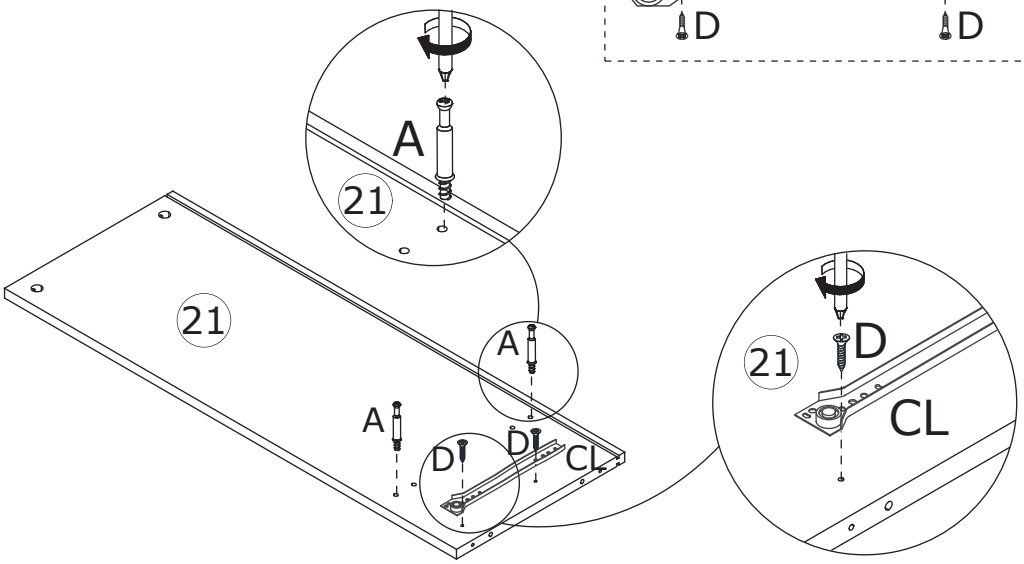

19

A x 2	
∅6 x 35 mm	

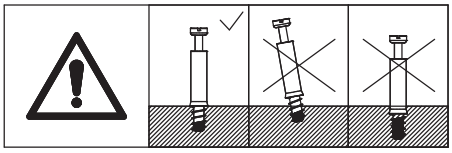

Screw eccentric rod A onto part 21.

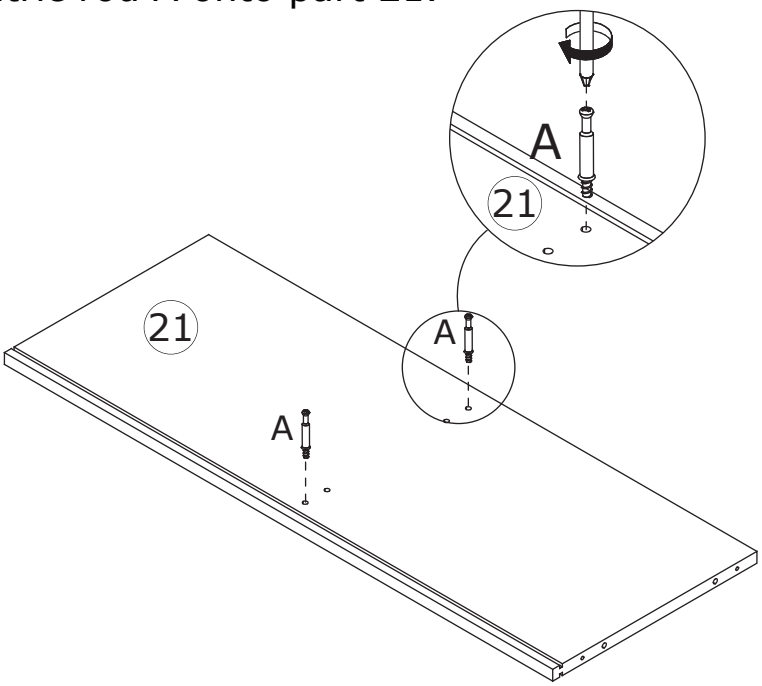

20

A x 2	D x 2	CR x 1	
∅6 x 35 mm	∅3 x 12 mm	200 mm	

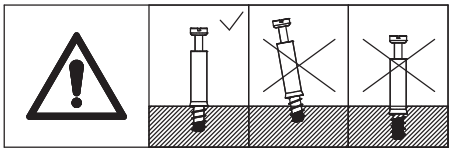

Screw eccentric rod A onto part 20, and secure guide rail CR using screw D.

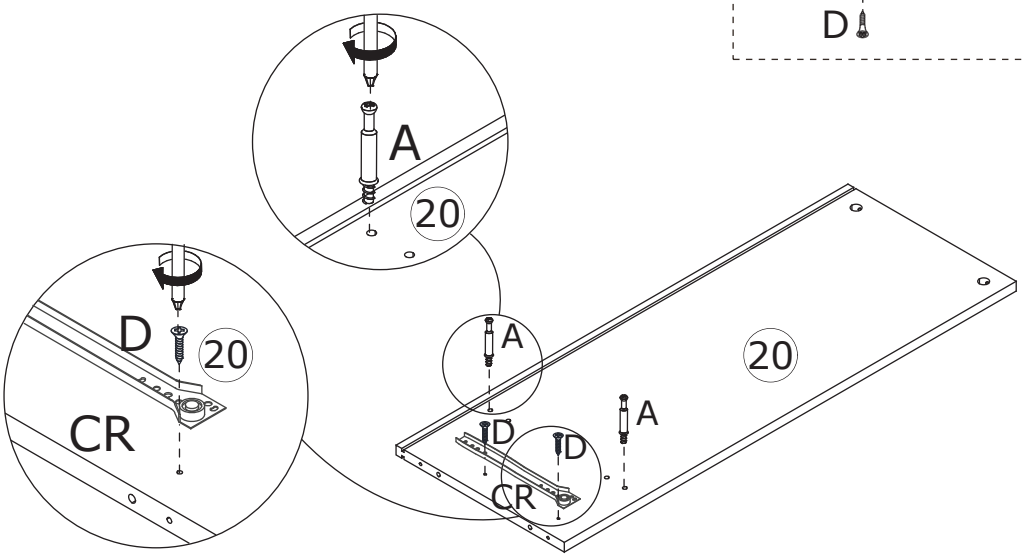

21

A x 2	
∅6 x 35 mm	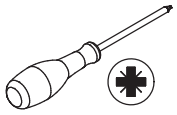

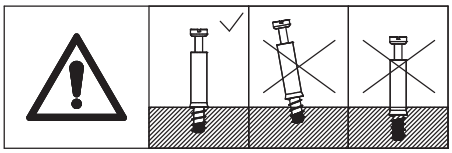

Screw eccentric rod A onto part 20.

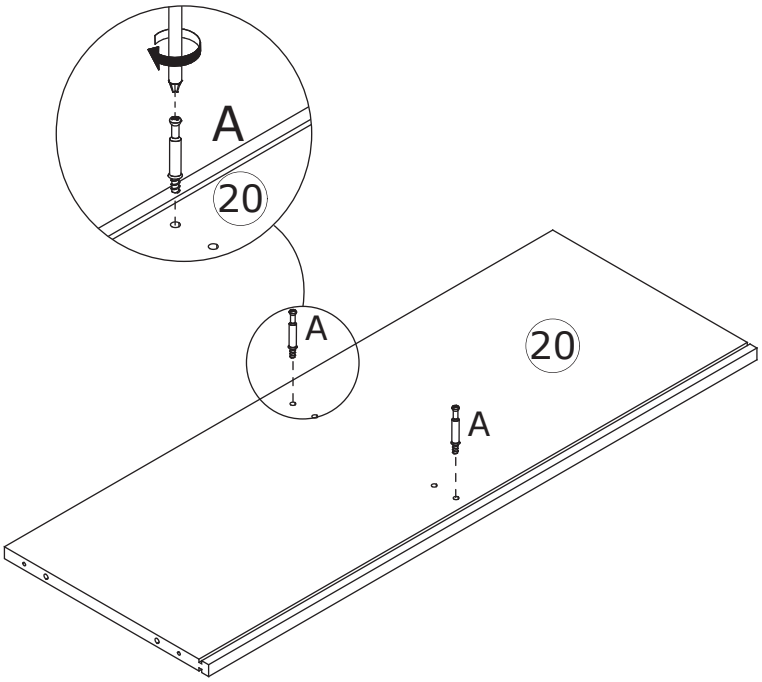

22

B x 4	C x 4	
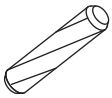 ∅6 x 30 mm	∅15 x 10 mm	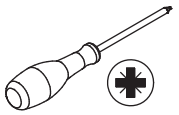

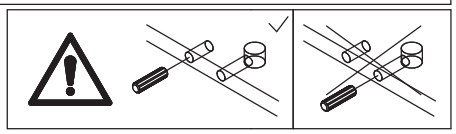

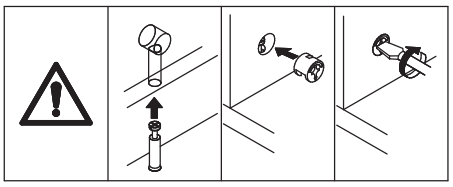

connect part 36 to part 20 and 21 using wooden dowel B, then tighten by turning cam lock C clockwise.

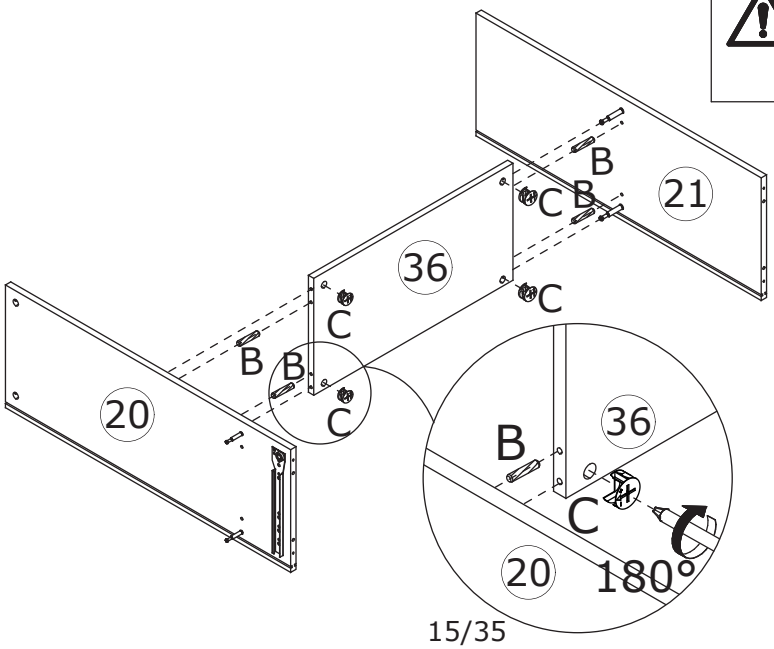

23

B x 4	C x 4	
∅6 x 30 mm	∅15 x 10 mm	

Connect part 23 to part 20 and 21 using wooden dowel B, then tighten by turning cam lock C clockwise.

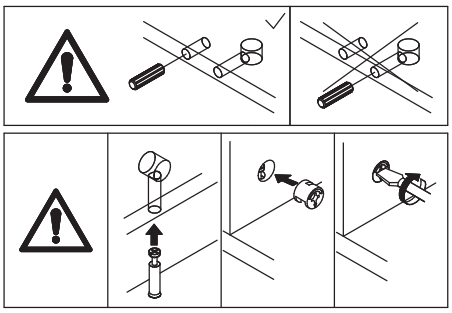

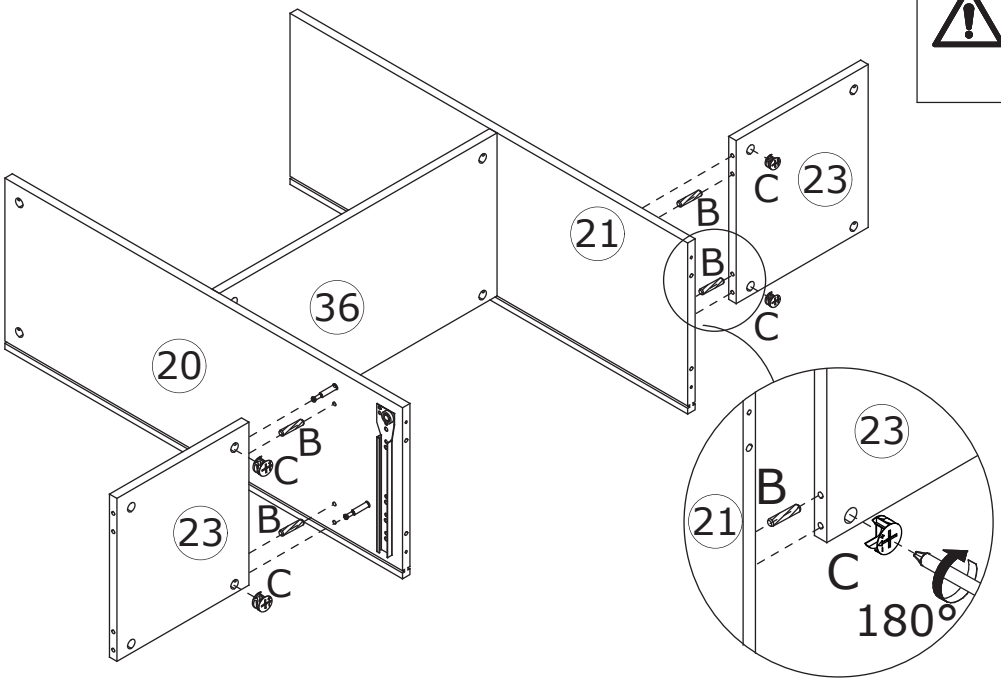

24

A x 2	D x 2	CL x 1	
∅6 x 35 mm	∅3 x 12 mm	200 mm	

Screw eccentric rod A onto part 19, and secure guide rail CL using screw D.

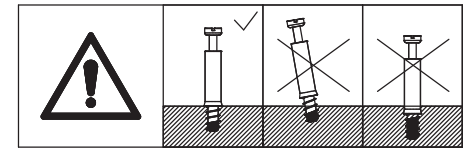

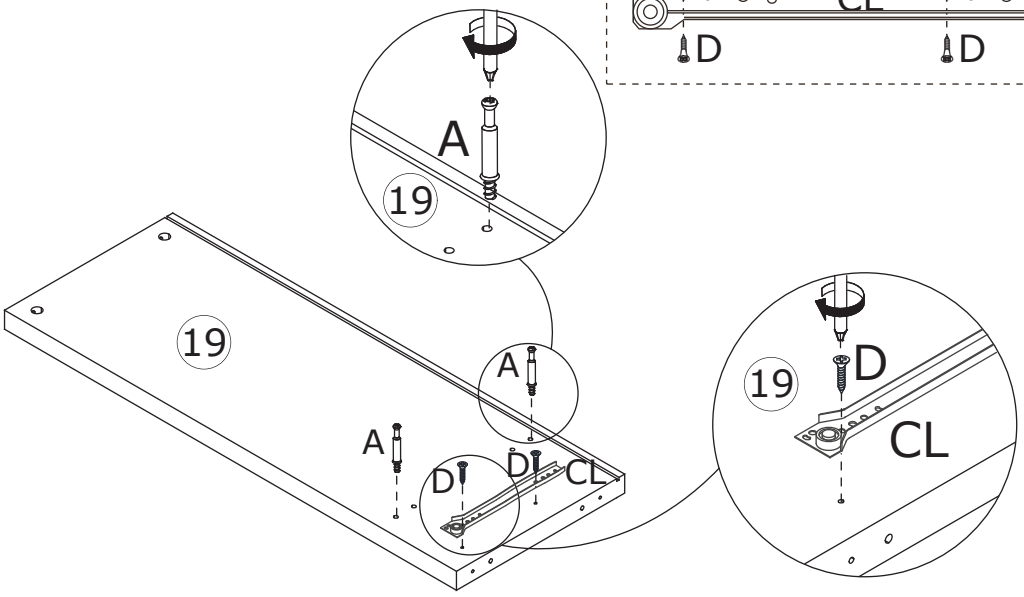

25

A x 2	D x 2	CR x 1	
∅6 x 35 mm	∅3 x 12 mm	200 mm	

Screw eccentric rod A onto part 22, and secure guide rail CR using screw D.

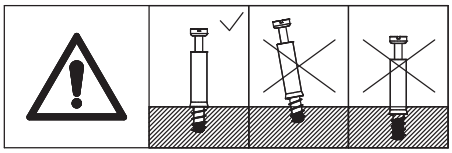

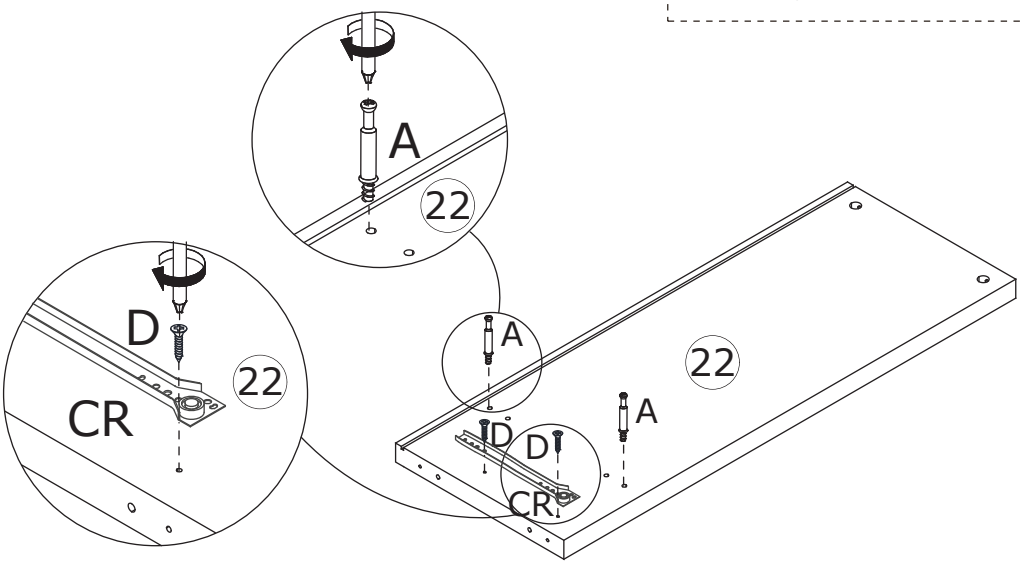

26

B x 4	C x 4	
∅6 x 30 mm	∅15 x 10 mm	

Connect part 19 and 22 to part 23 using wooden dowel B, then tighten by turning cam lock C clockwise.

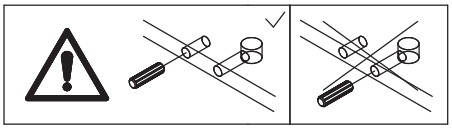

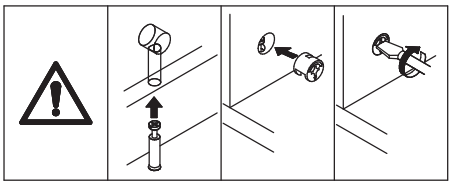

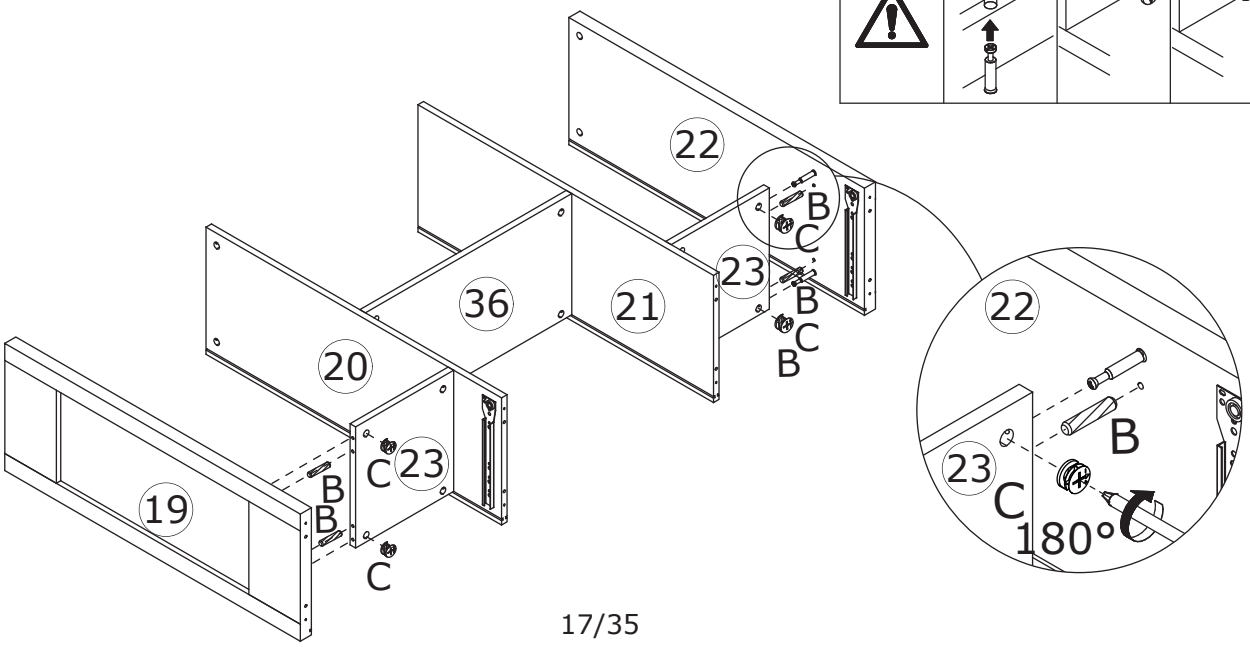

27

A x 8	
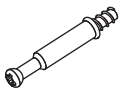 ∅6 x 35 mm	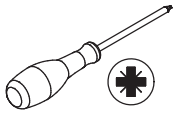

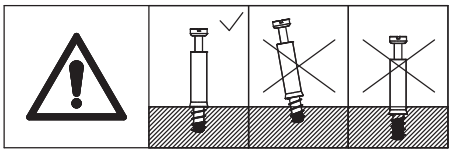

Screw eccentric rod A onto part 18.

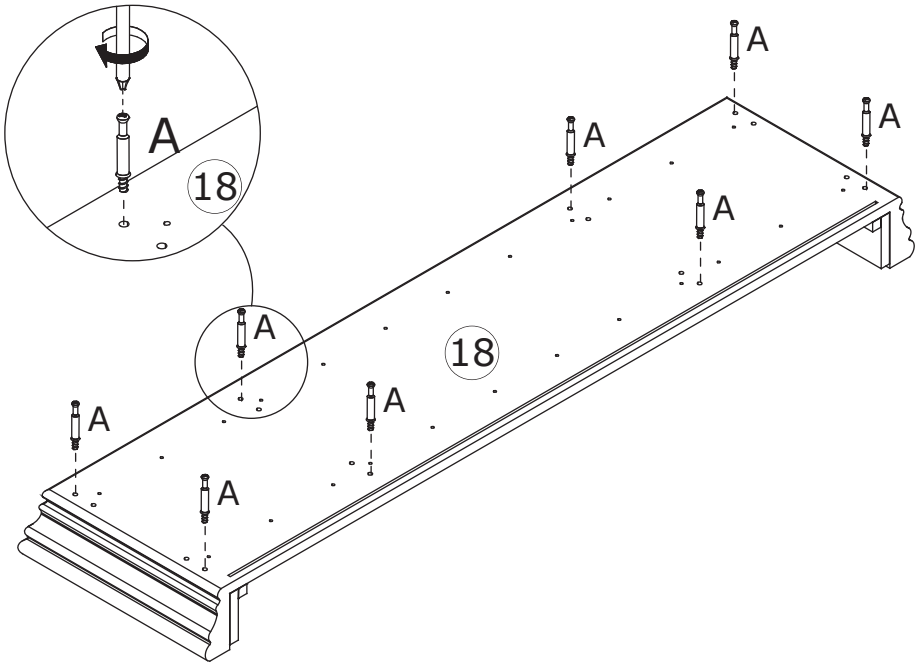

28

B x 8	C x 8	
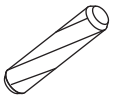 ∅6 x 30 mm	∅15 x 10 mm	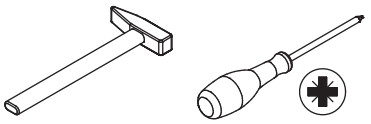

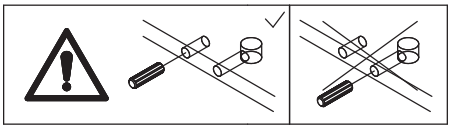

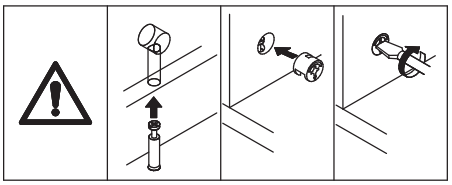

Connect part 18 to part 19, 20, 21 and 22 using wooden dowel B, then tighten by turning cam lock C clockwise.

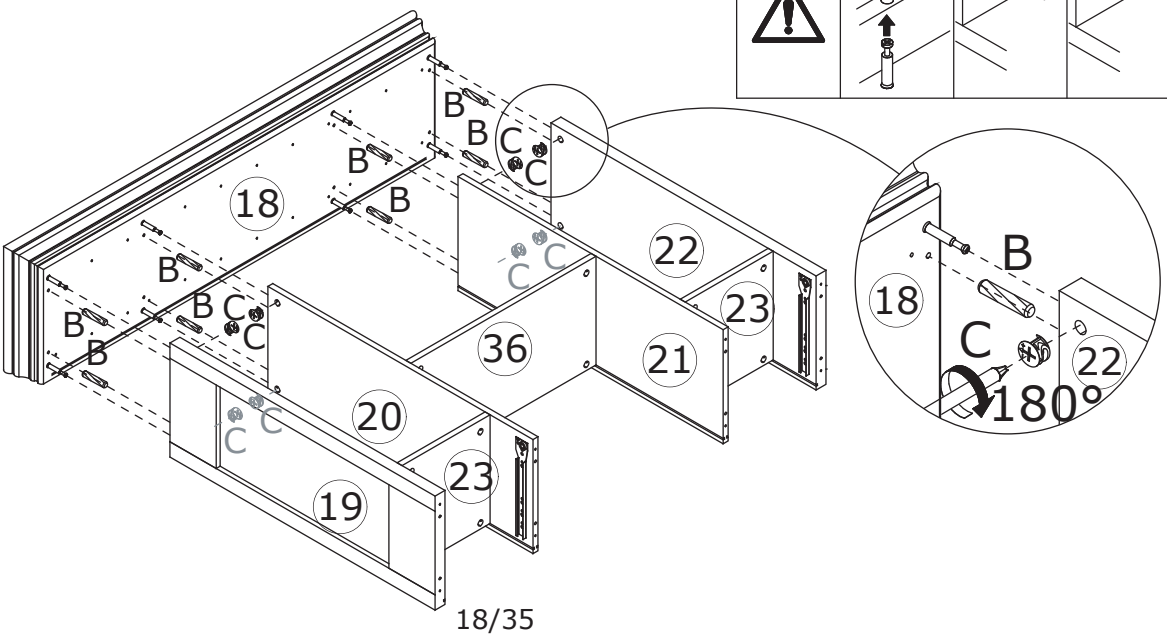

29

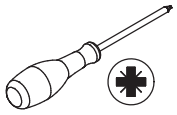

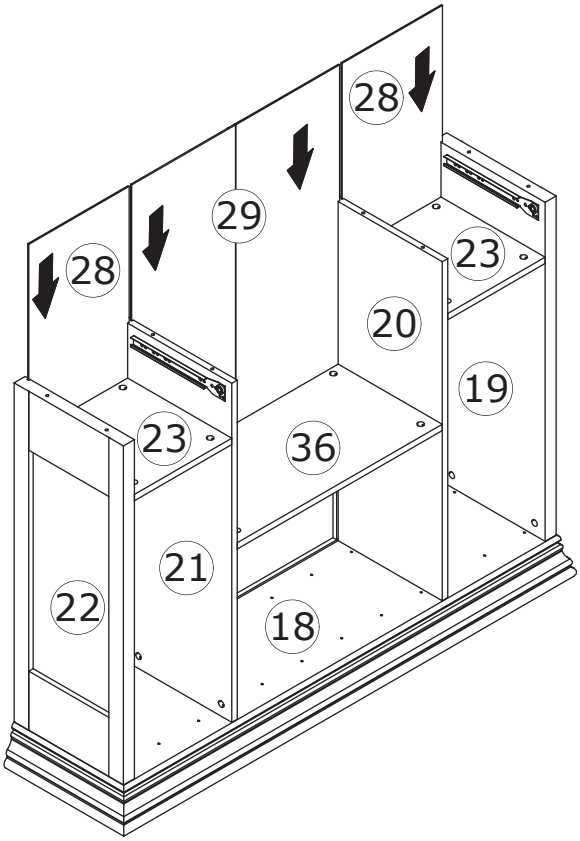

Insert part 28 and 29 along the available slots.

30

E x 16	
∅4 x 30 mm	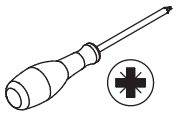

Secure part 27 to part 18 using screw E.

	F	E
	∅ 5 x 40 mm	∅ 4 x 30 mm

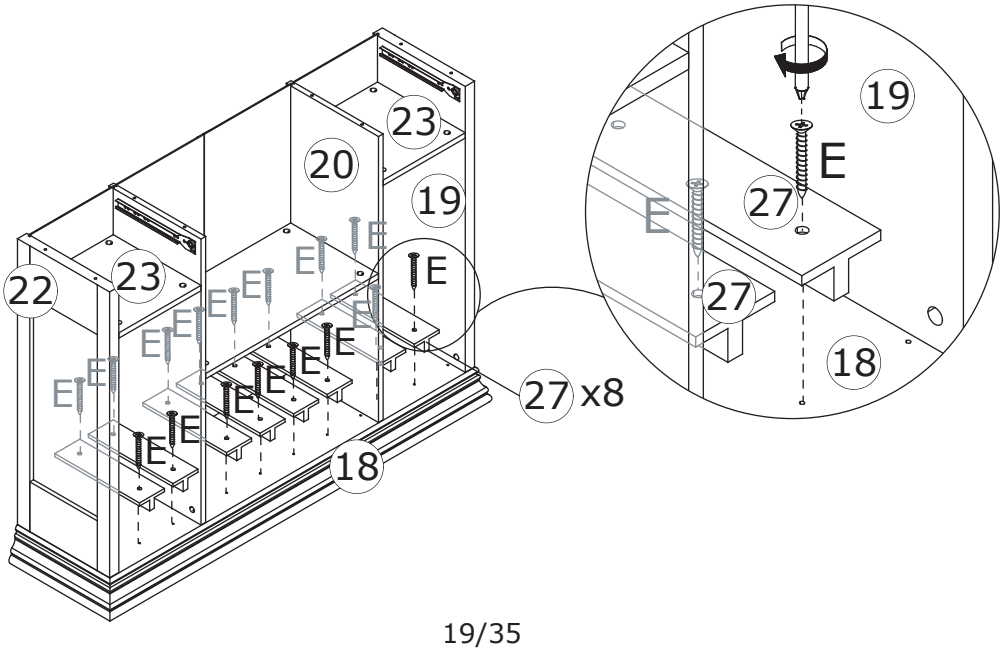

31

E x 8

∅4 x 30 mm

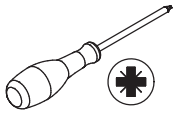

F

∅ 5 x 40 mm

E

∅ 4 x 30 mm

Secure part 25 and 26 to part 18 using screw E.

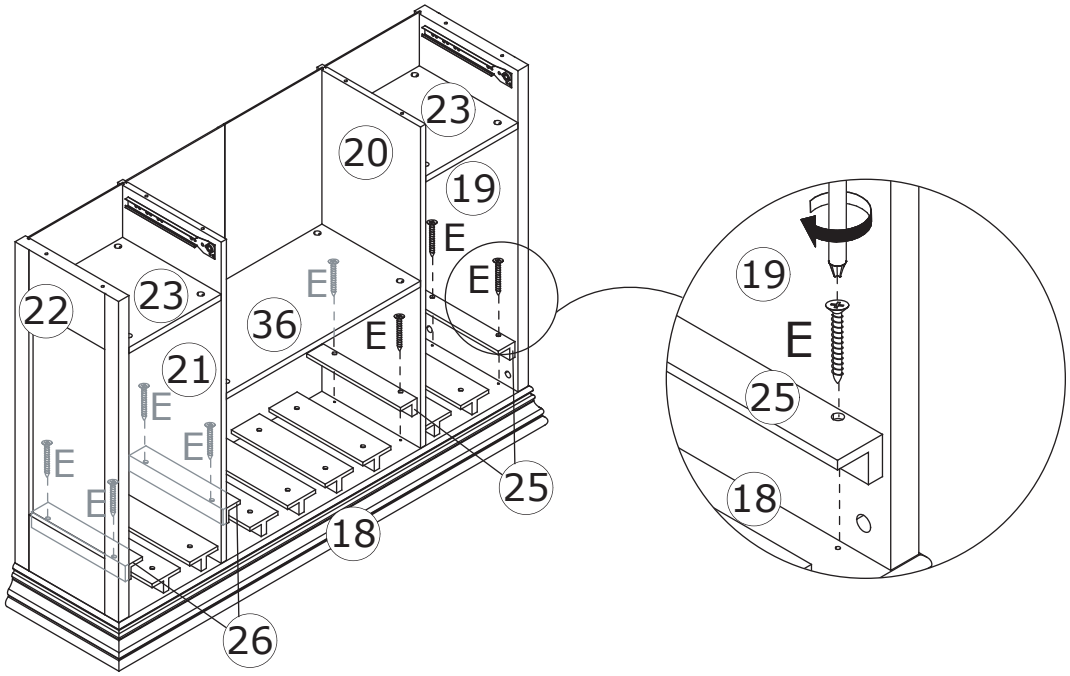

32

A x 8

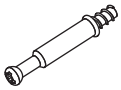

∅6 x 35 mm

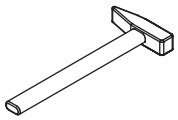

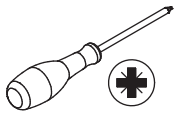

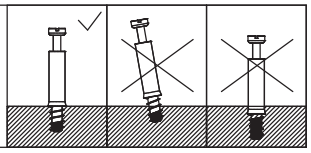

Screw eccentric rod A onto part 1.

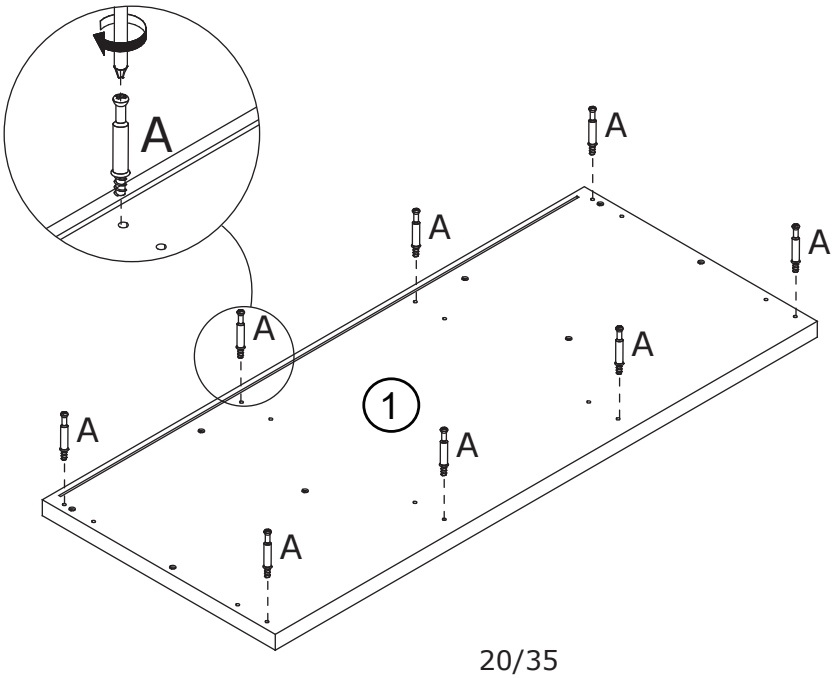

33

B x 8	F x 8	
∅6 x 30 mm	∅5 x 40 mm	

	F	E
	∅ 5 x 40 mm	∅ 4 x 30 mm

Connect part 1 to part 22, 21, 20 and 19 using wooden dowel B and screw F.

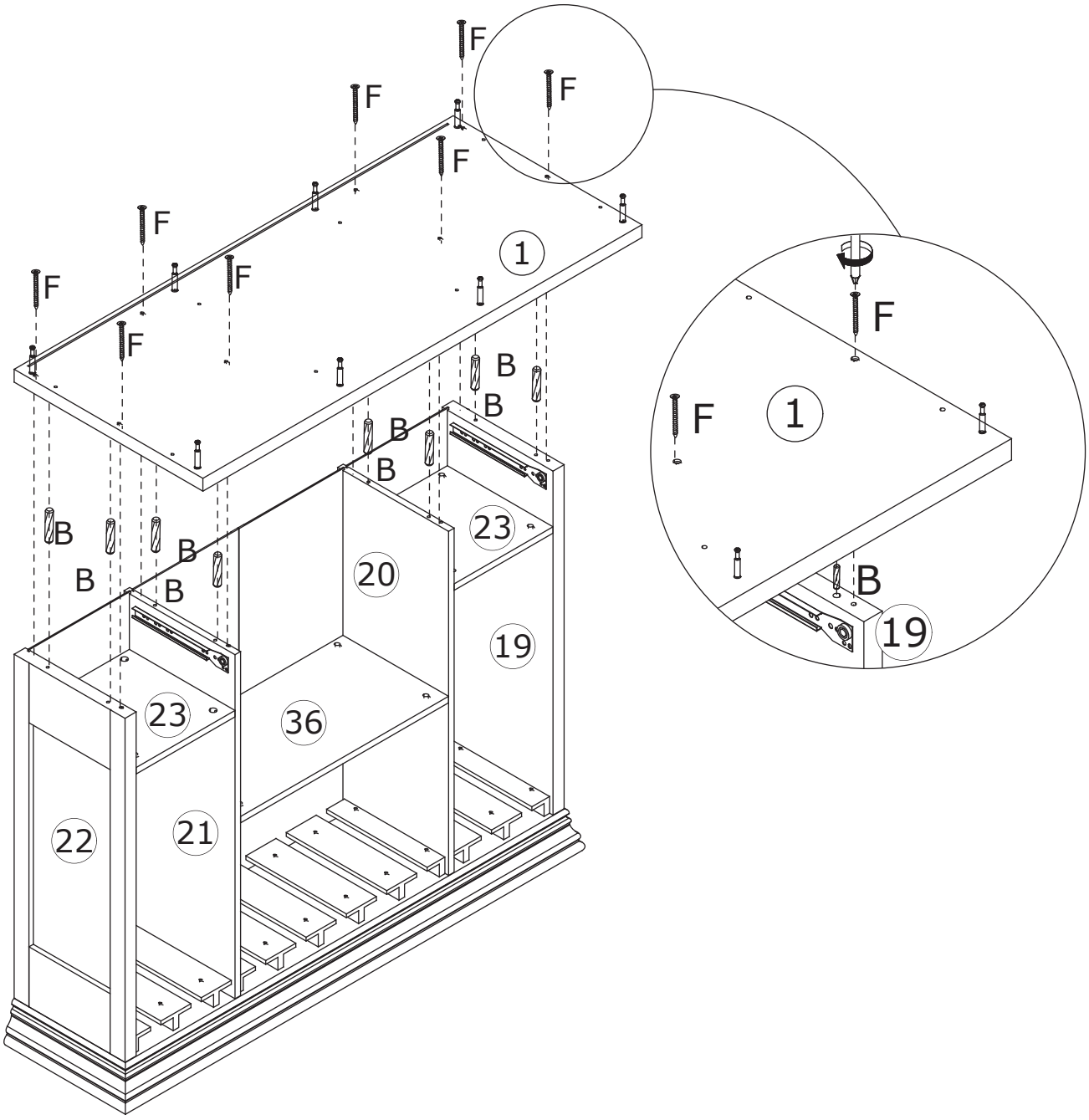

34

B x 8	C x 8	
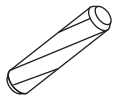		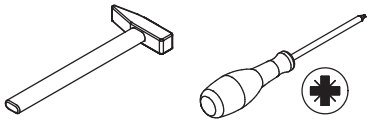
∅6 x 30 mm	∅15 x 10 mm	

Connect the two components using wooden dowel B, then tighten by turning cam lock C clockwise.

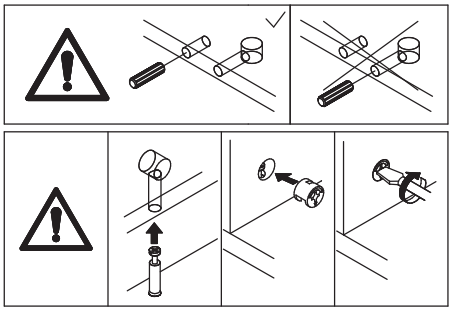

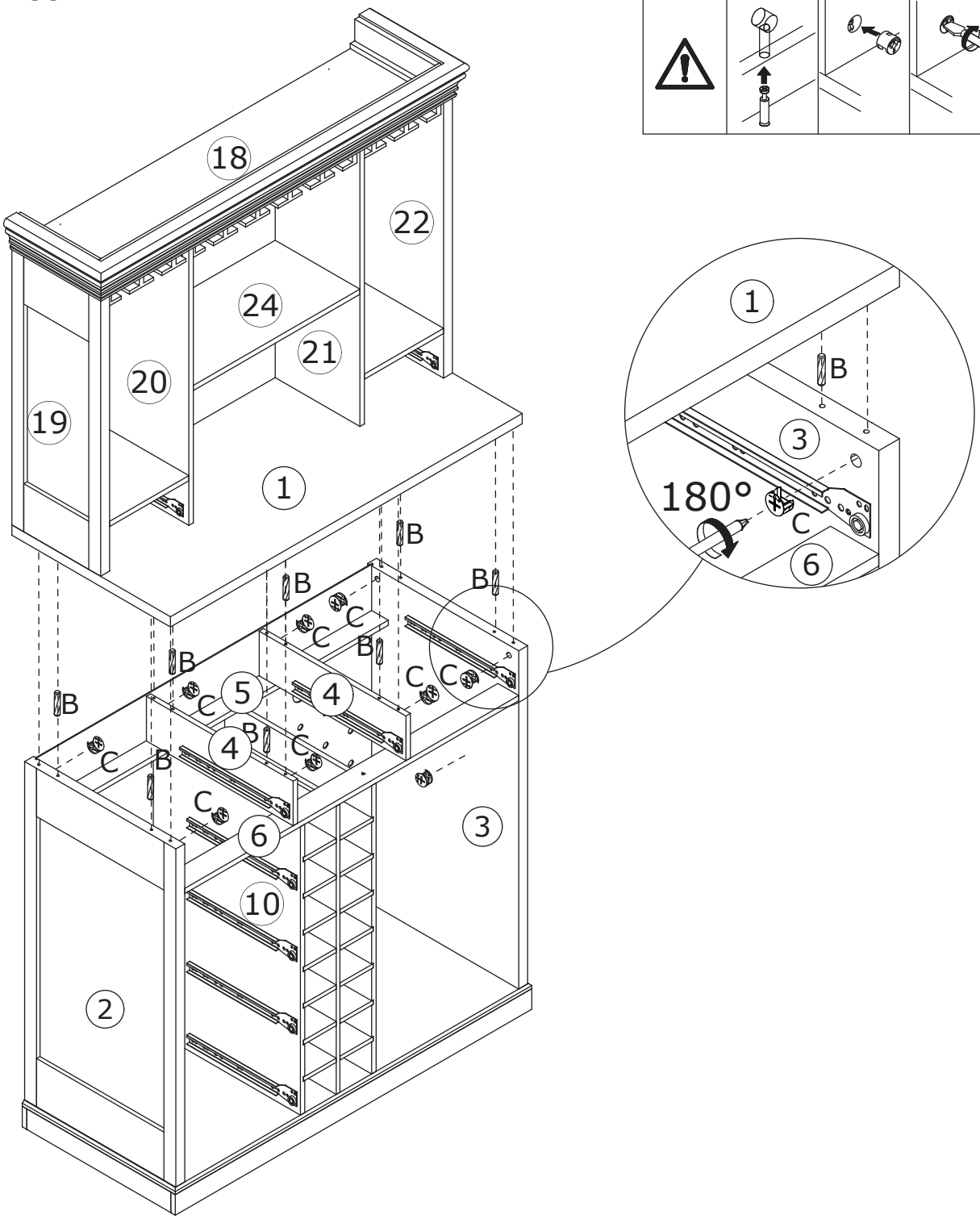

35

E x 12

∅4 x 30 mm

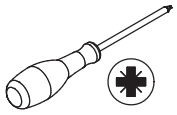

Secure part 35 to part 36 and 37 using screw E.

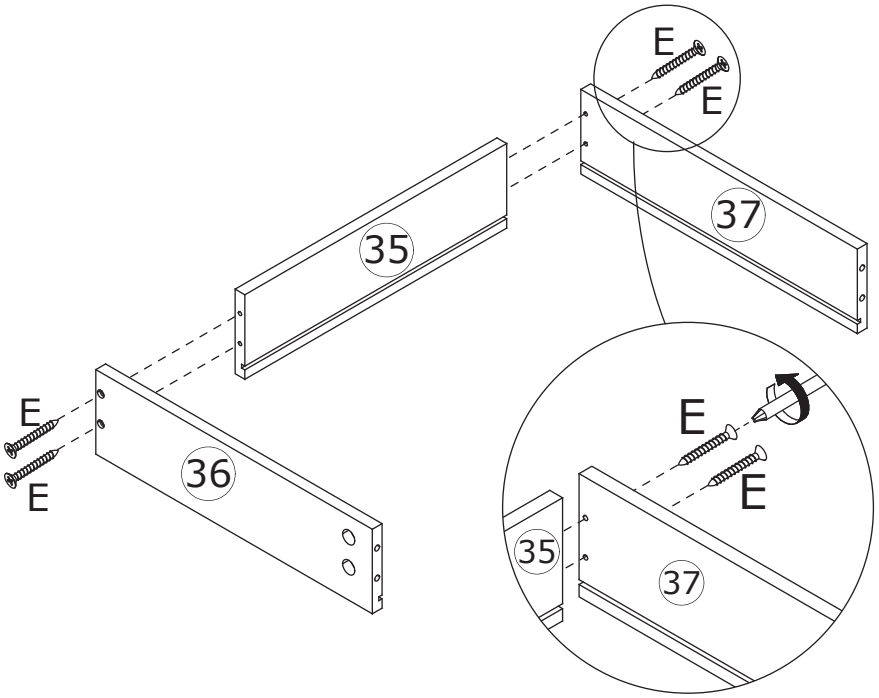

x3

36

Insert part 38 along the available slots.

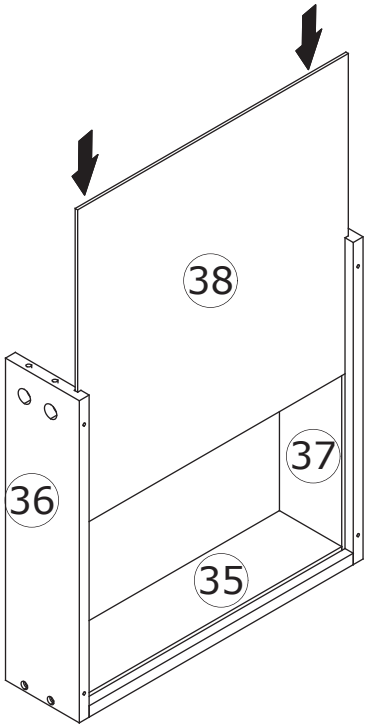

x3

37

A x 12	L x 3	M x 3	
∅6 x 35 mm		∅4 x 16 mm	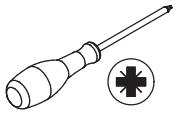

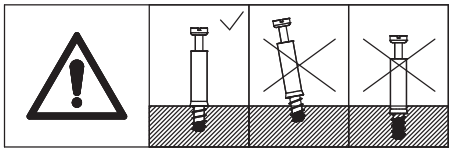

Screw eccentric rod A onto part 39, and secure knob L using screw M.

x3

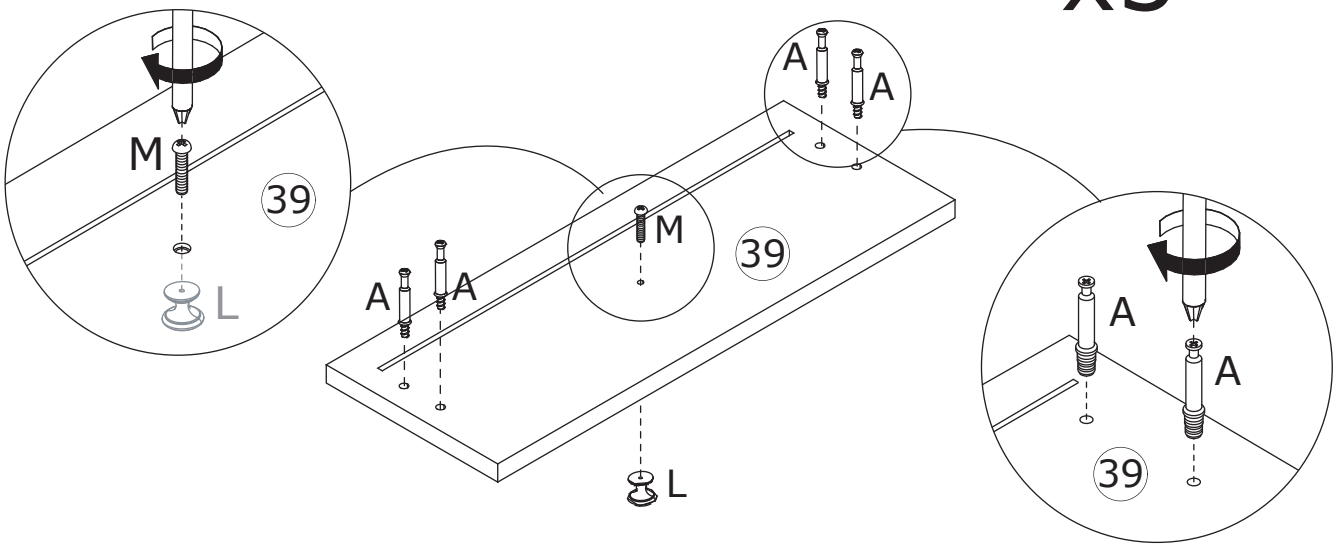

38

C x 12	
∅15 x 10 mm	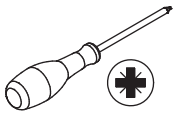

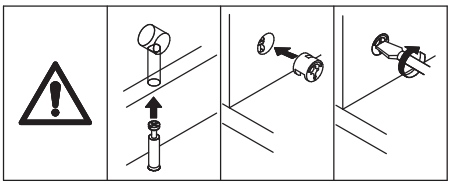

Connect part 39 to part 36 and 37, then tighten by turning cam lock C clockwise.

x3

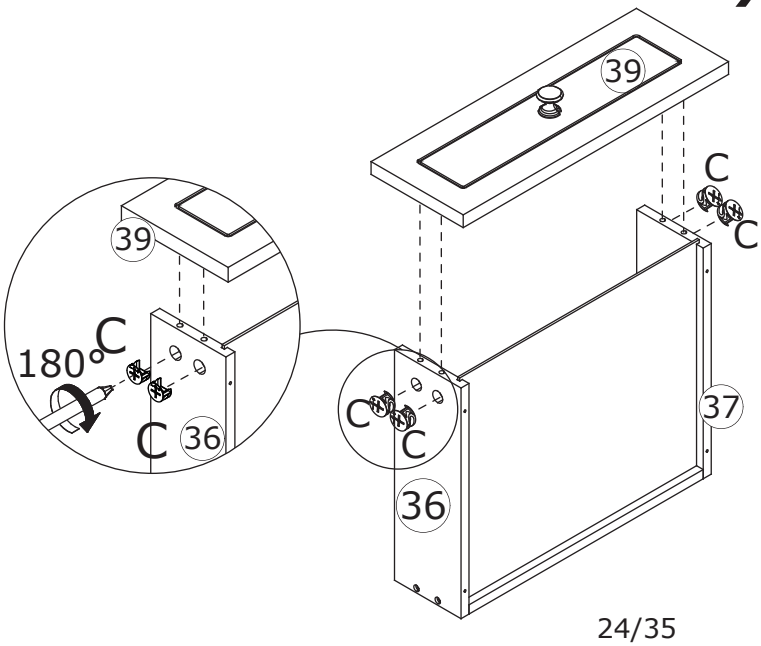

39

D x 4	DL x 3	DR x 3	
∅3 x 12 mm	350 mm	350 mm	

	D	P
	∅3 x 12 mm	∅3 x 16 mm

Secure guide rail DR and DL onto part 37 and 36 using screw D.

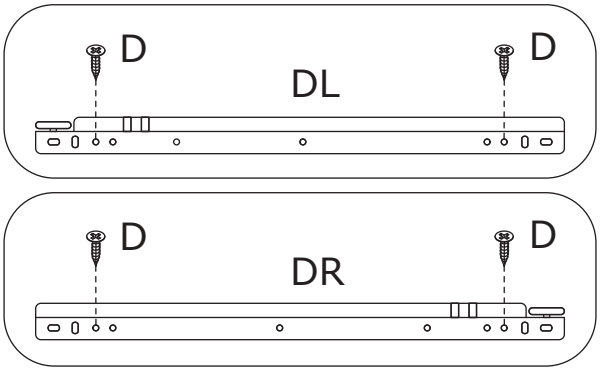

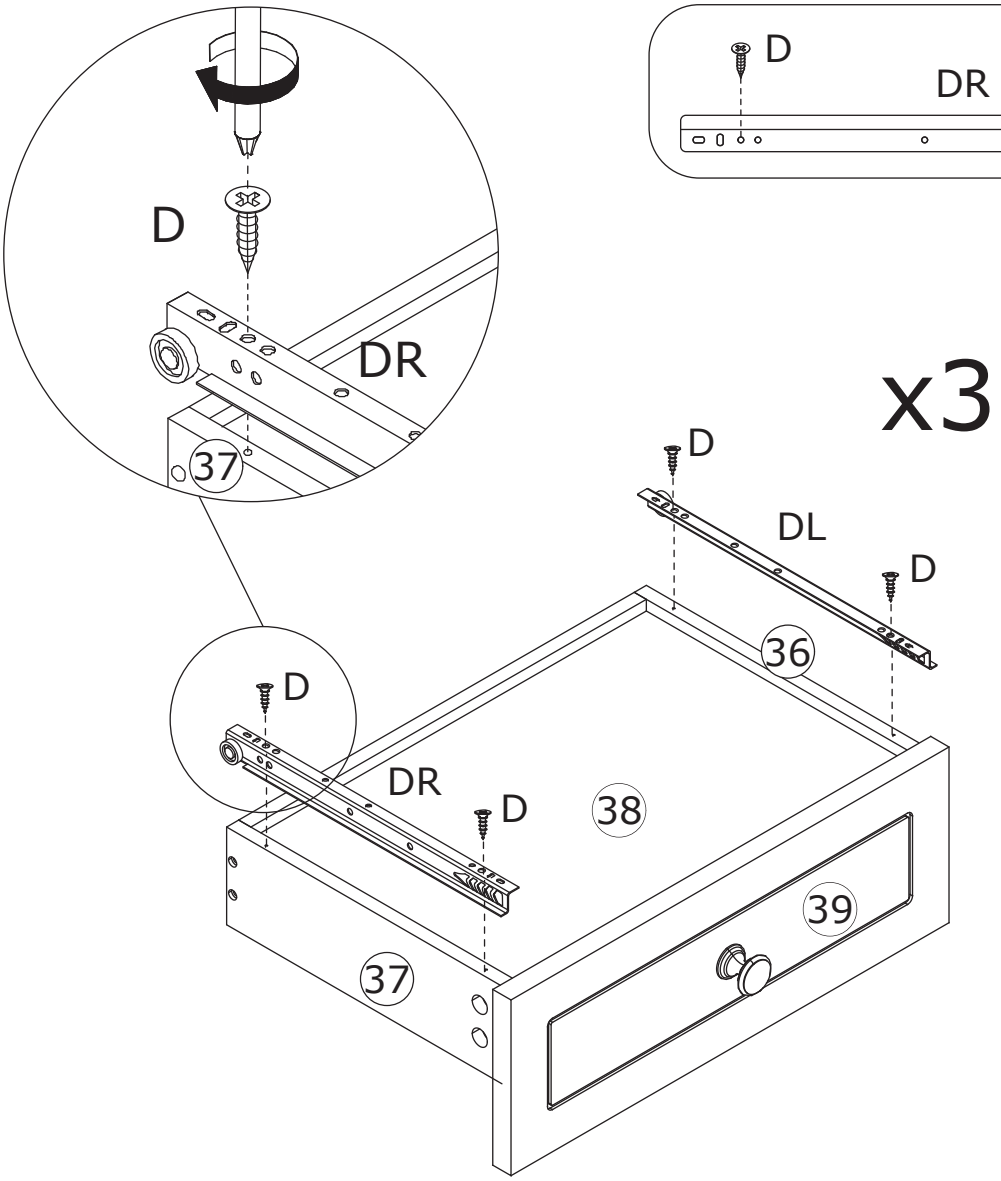

40

E x 16

∅4 x 30 mm

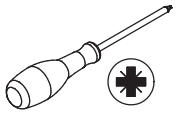

Secure part 40 to part 41 and 42 using screw E.

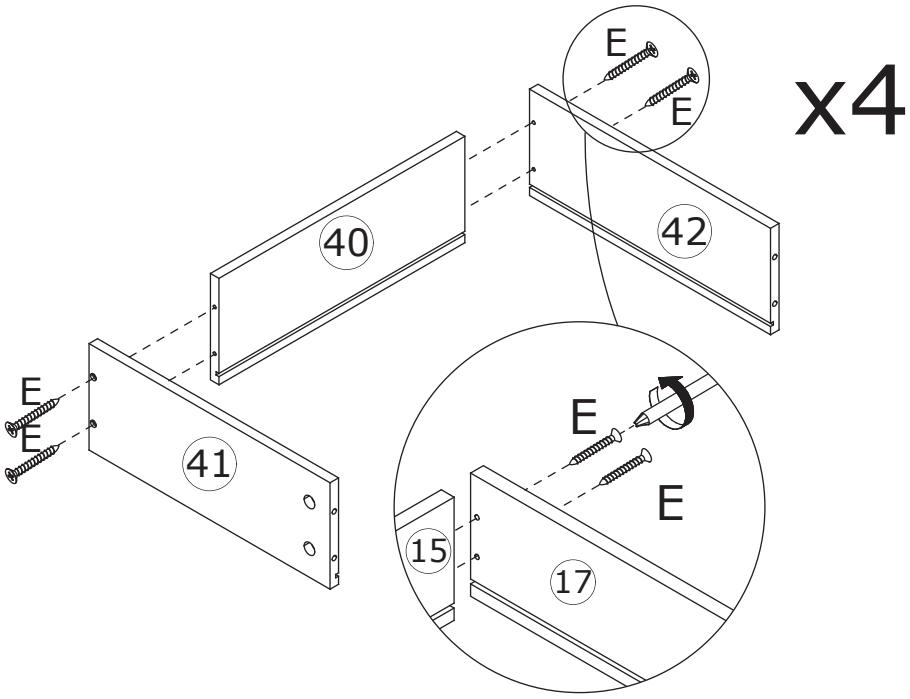

41

Insert part 43 along the available slots.

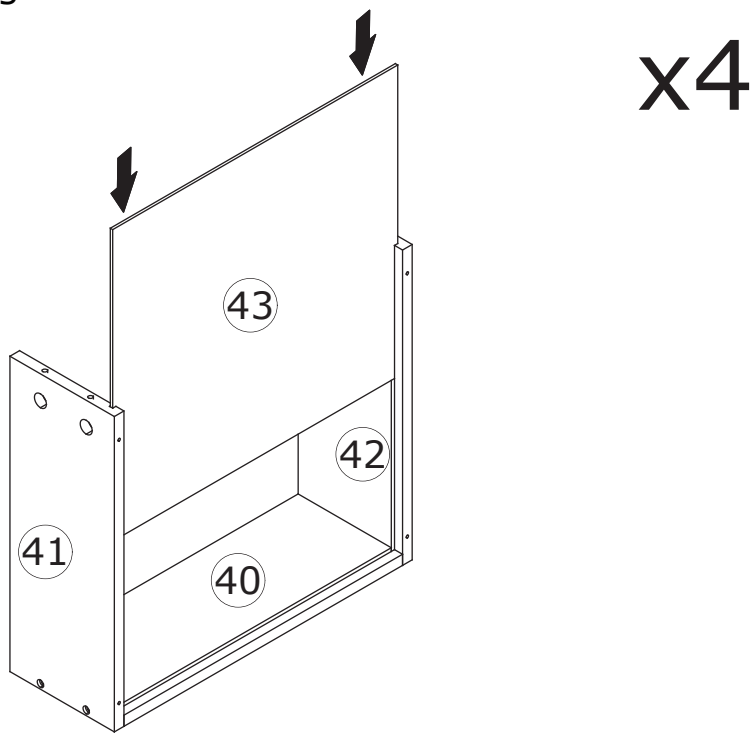

42

A x 16

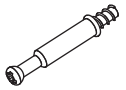

∅6 x 35 mm

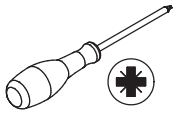

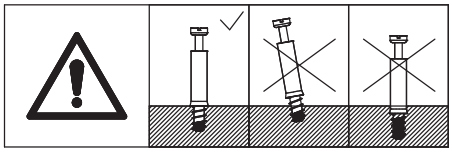

Screw eccentric rod A onto part 44.

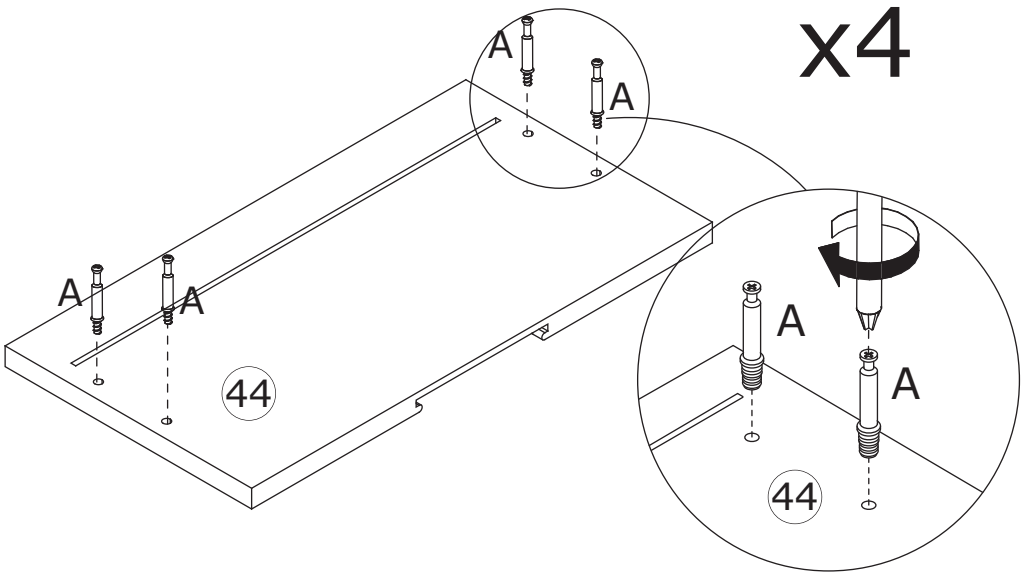

43

C x 16

∅15 x 10 mm

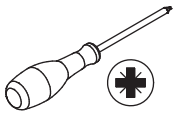

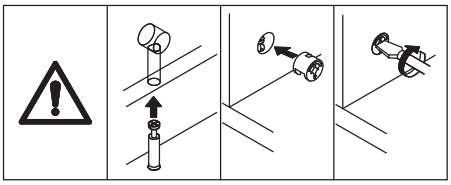

Connect part 44 to part 41 and 42, then tighten by turning cam lock C clockwise.

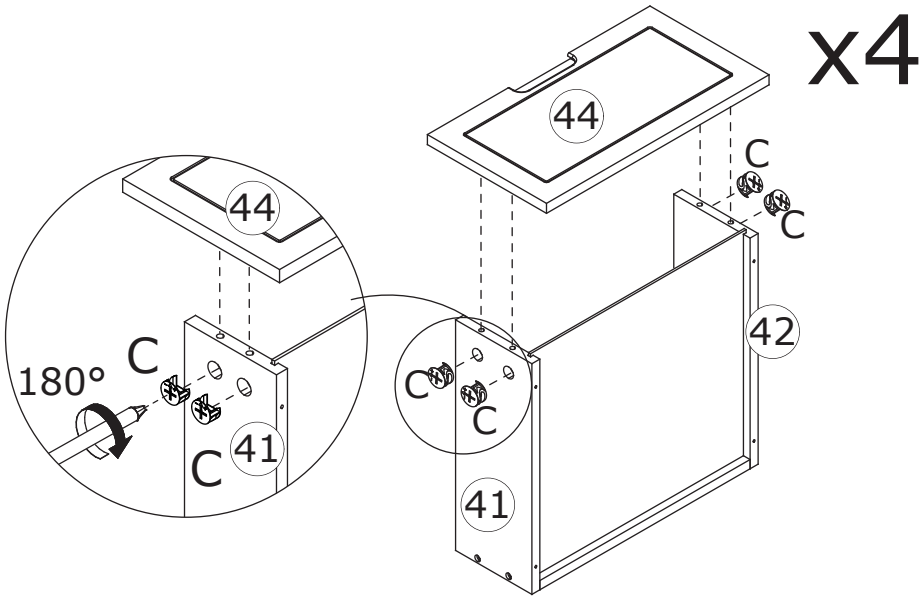

44

D x 16	DL x 4	DR x 4	
∅3 x 12 mm	350 mm	350 mm	

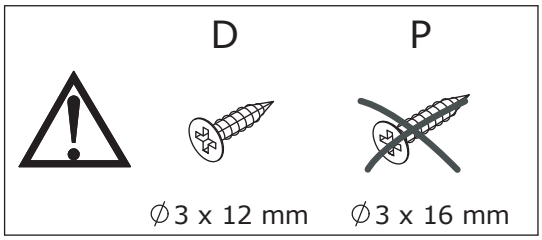

Secure guide rail DR and DL onto part 42 and 41 using screw D.

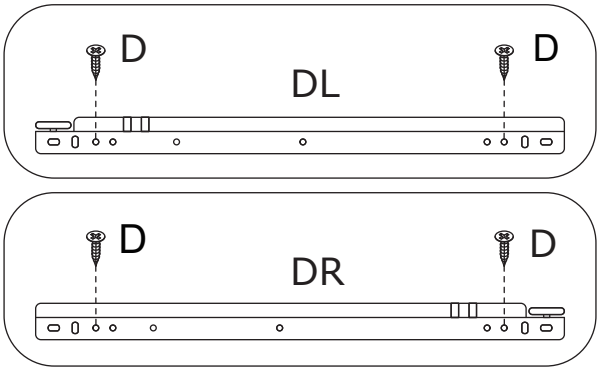

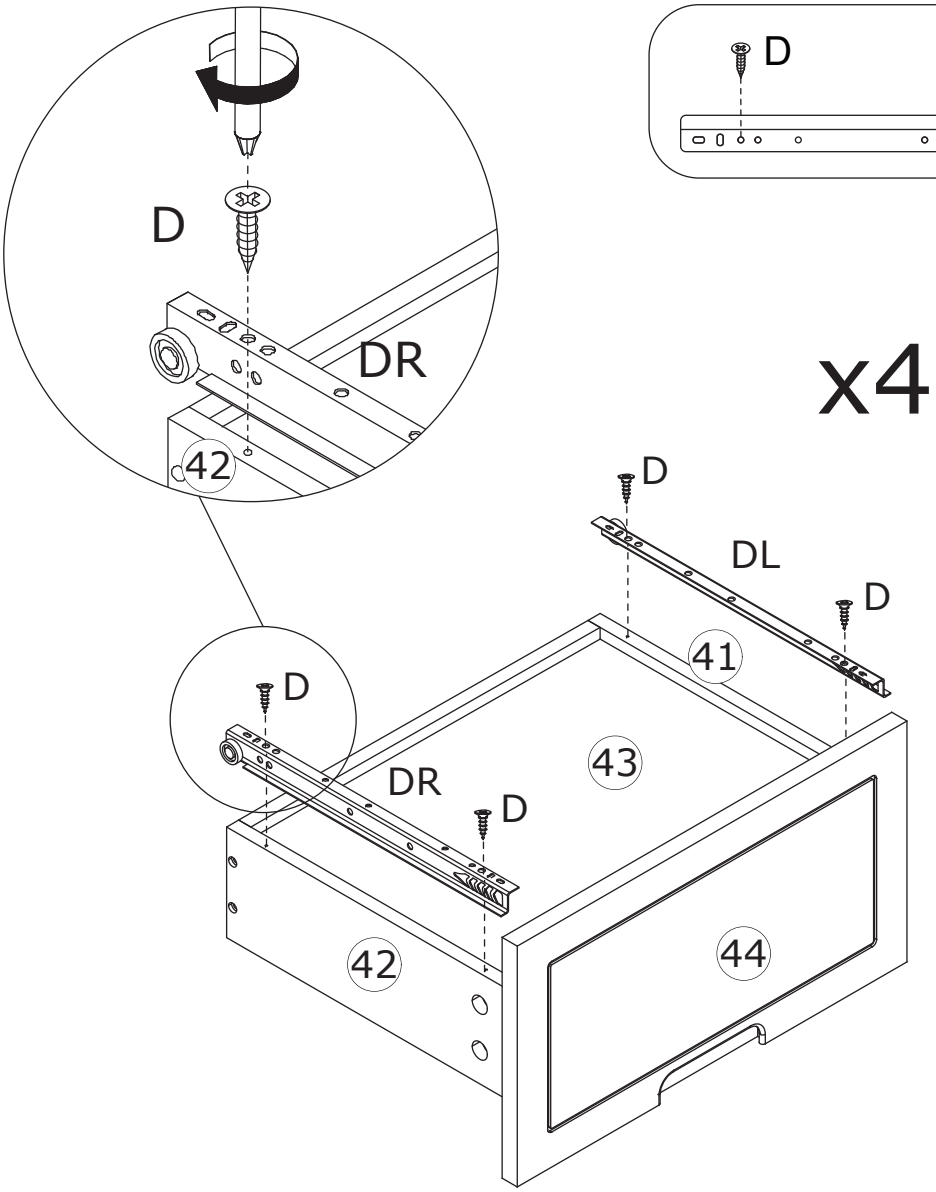

45

E x 8

∅4 x 30 mm

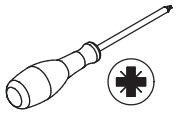

Secure part 30 to part 31 and 32 using screw E.

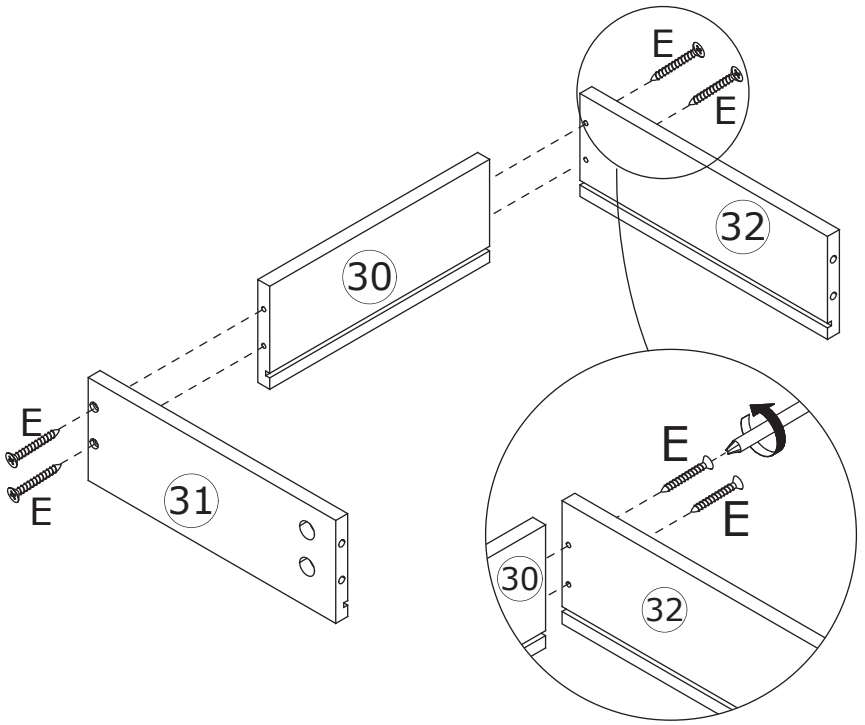

x2

46

Insert part 33 along the available slots.

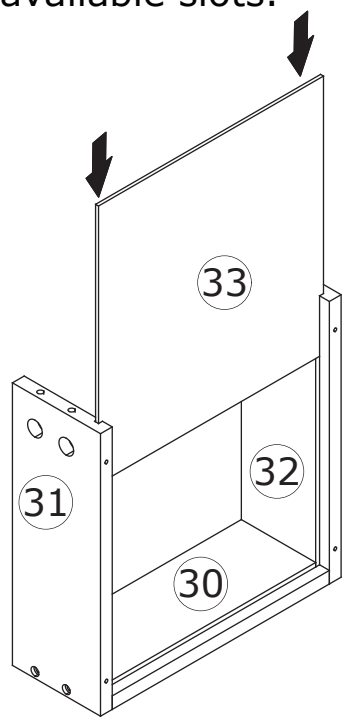

x2

47

A x 8	L x 2	M x 2	
∅6 x 35 mm		∅4 x 16 mm	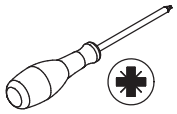

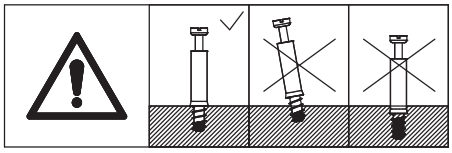

Screw eccentric rod A onto part 34, and secure knob L using screw M.

x2

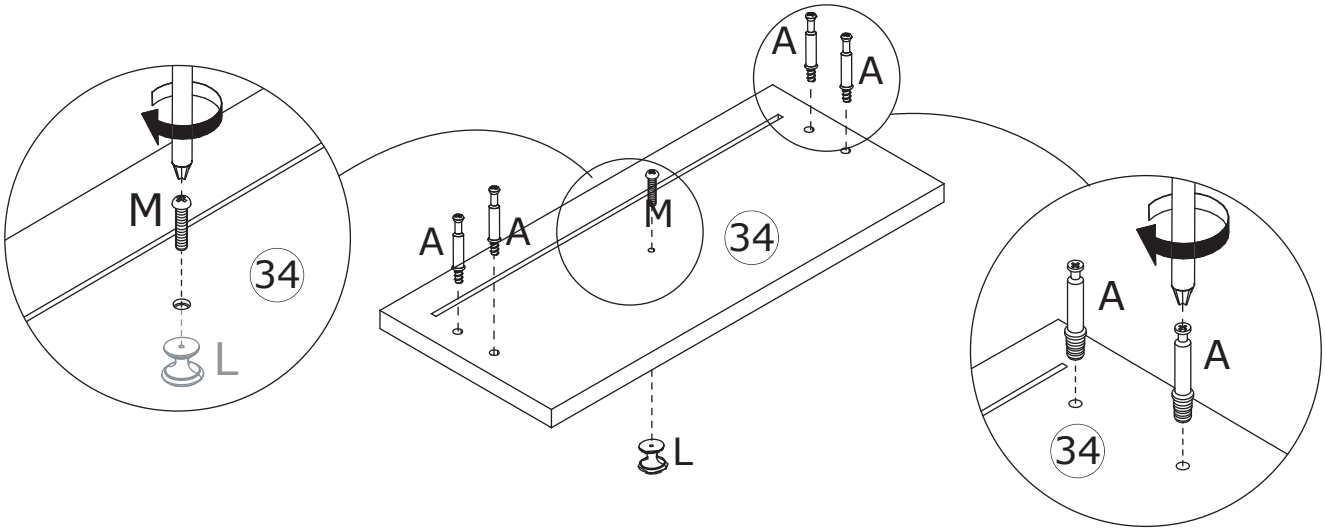

48

C x 8	
∅15 x 10 mm	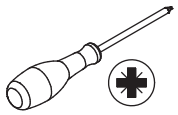

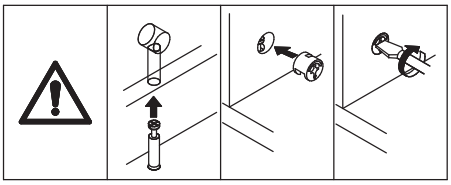

Connect part 34 to part 31 and 32, then tighten by turning cam lock C clockwise.

x2

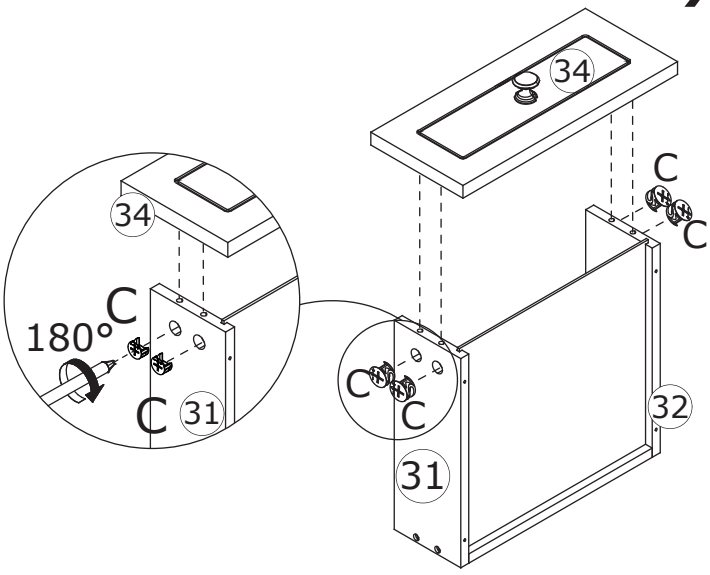

49

D x 4	DL x 2	DR x 2	
∅3 x 12 mm	250 mm	250 mm	

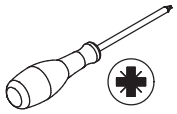

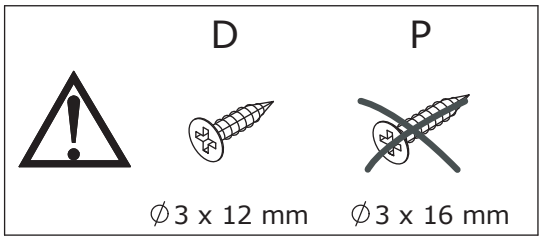

Secure guide rail DR and DL onto part 32 and 31 using screw D.

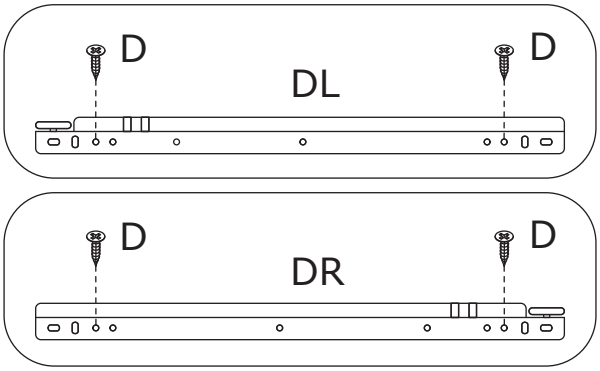

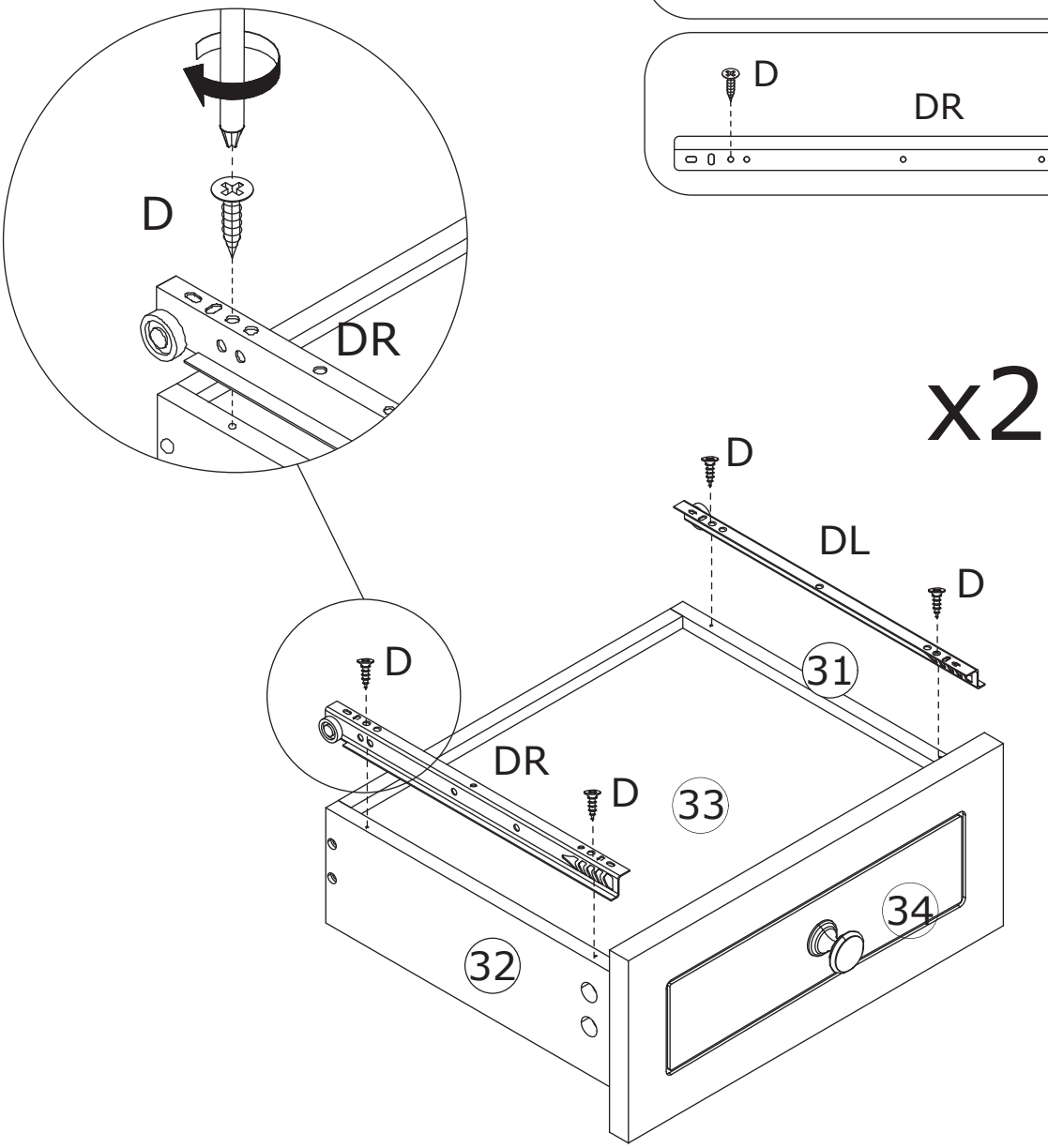

50

Place the drawers into the cabinet body.

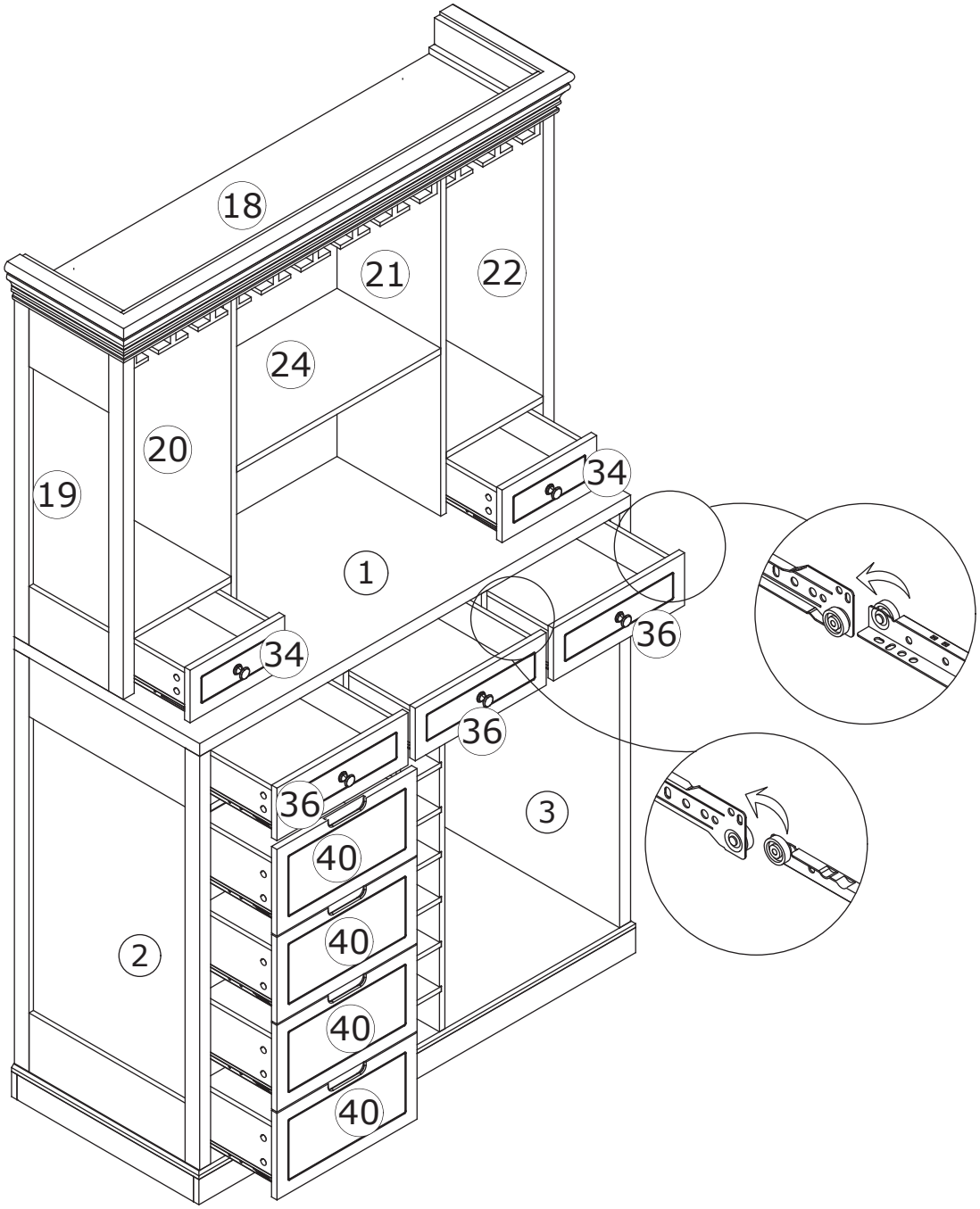

51

Place the refrigerator into the cabinet body.

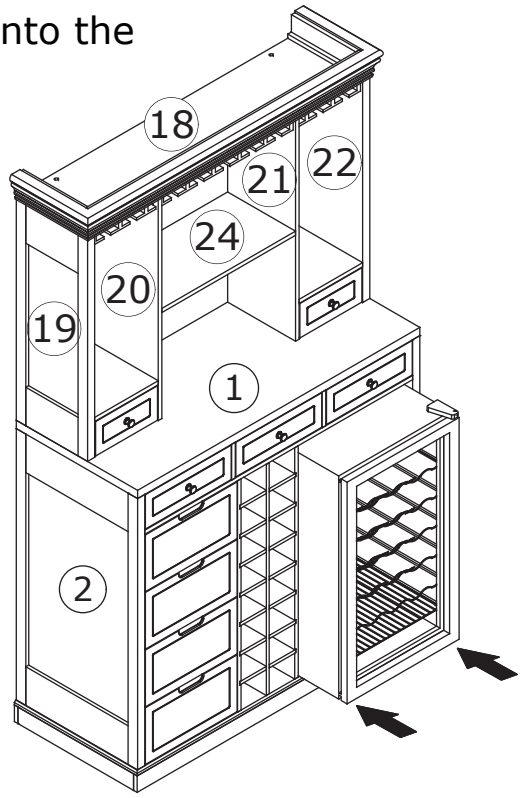

52

N x 28	P x 28	
	∅3 x 16 mm	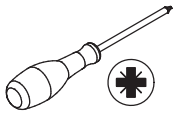

Insert clip N into back slots and secure using screw P.

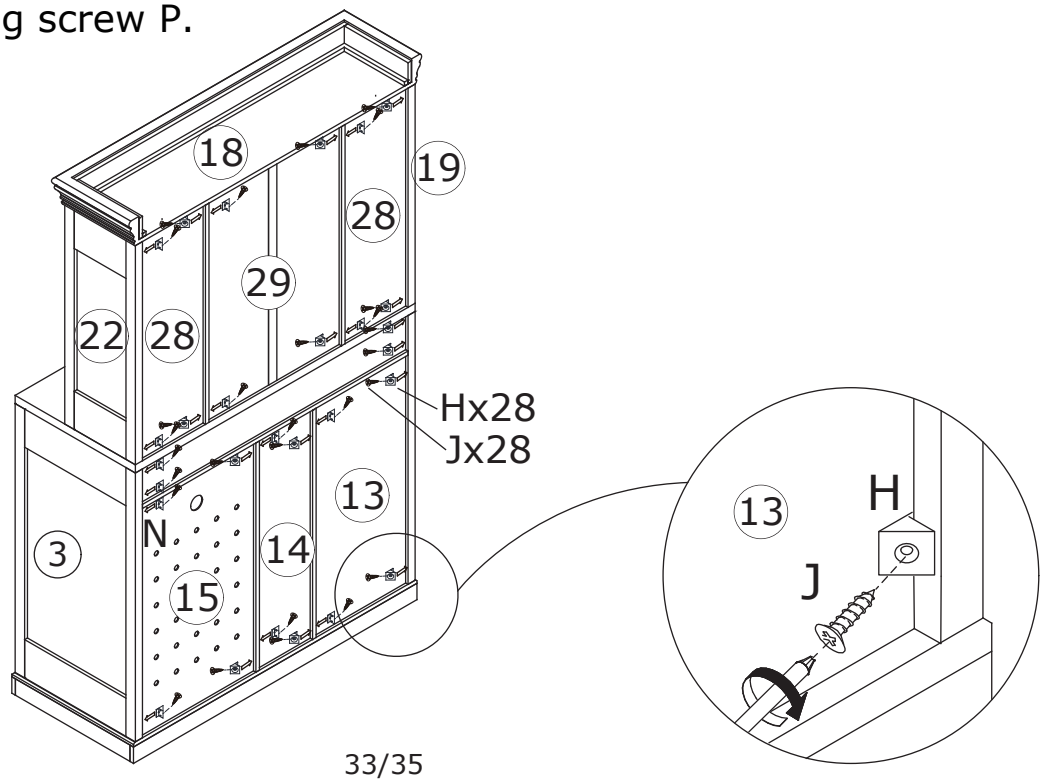

53

G x 2	K x 2	
75 x 35 x 15 mm	∅4 x 14 mm	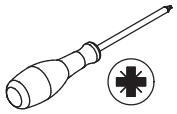

Secure anti-tip device G onto part 18 using screw K.

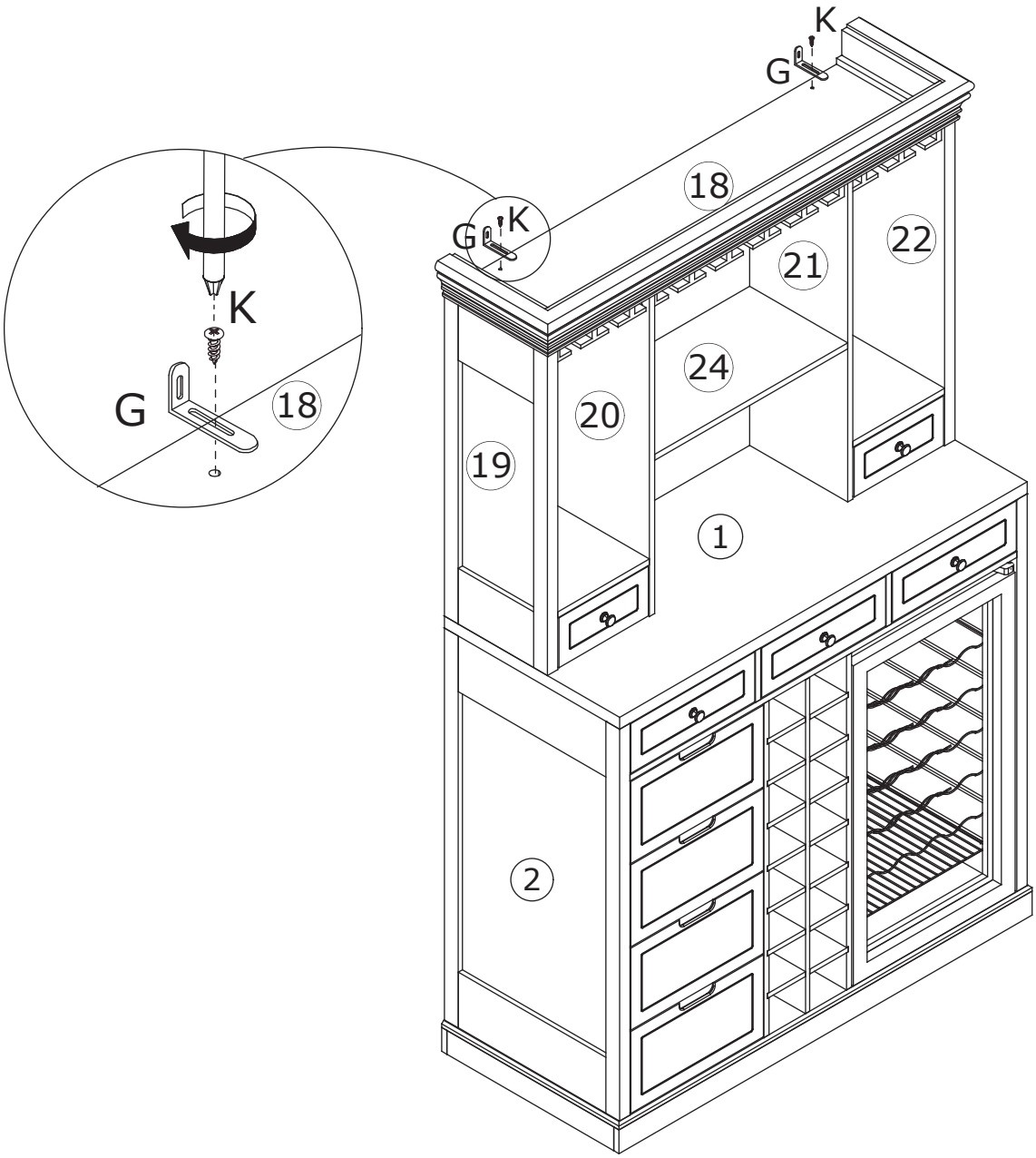

54

N x 2

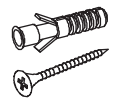

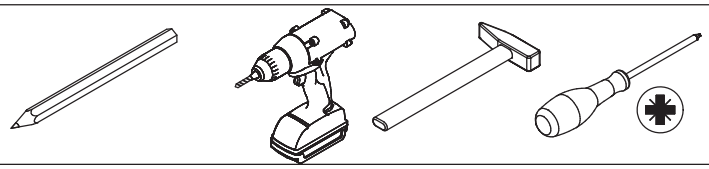

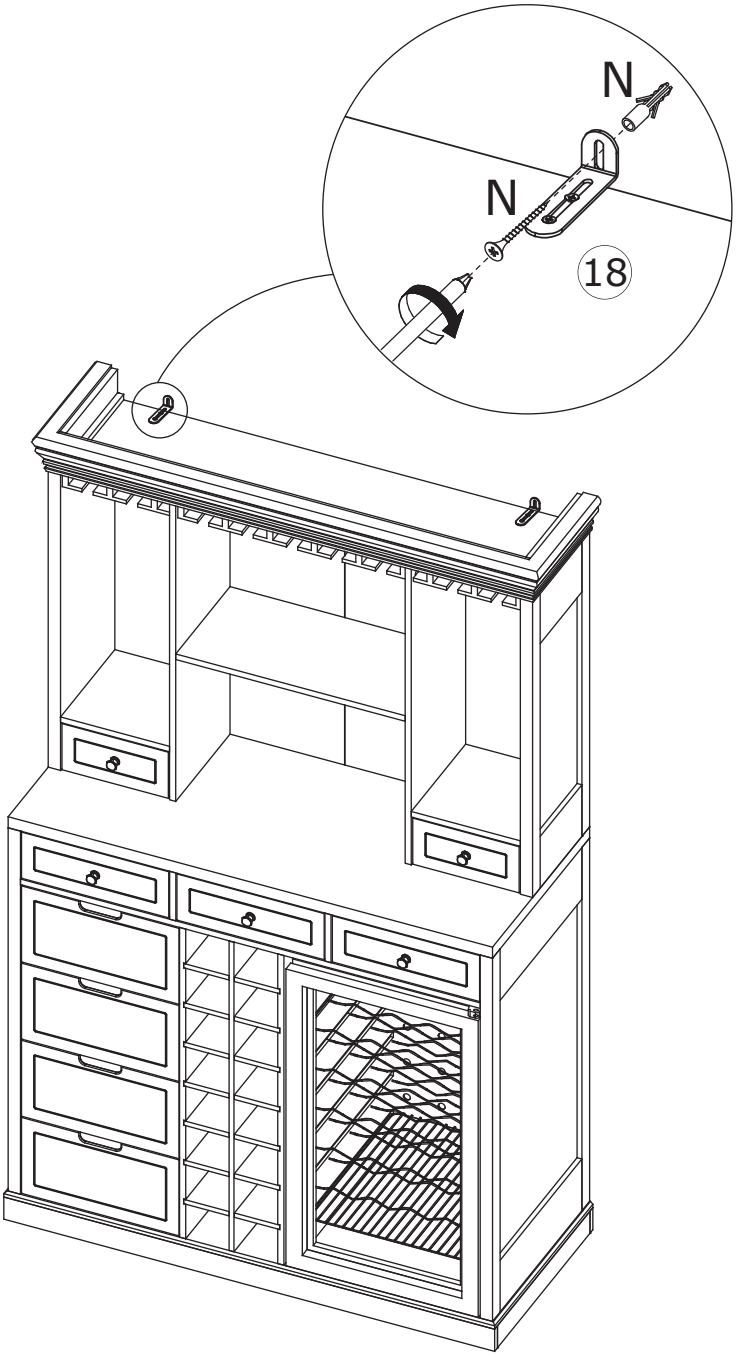

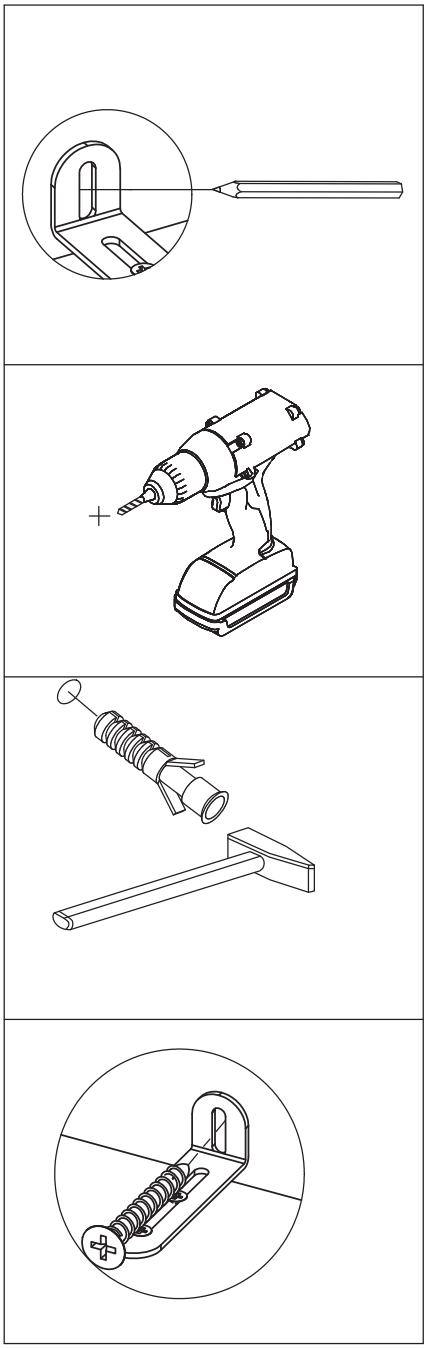

Installed anti-tip device.

WARRANTY

WARRANTY CLAIMS

•There is a 30-day warranty for broken furniture or any other problems that do not work properly. The warranty will start from the date of purchase which must be verified by proof of purchase.

•Before making a claim, we may be able to answer your query, simply call us. Please leave your purchase order number, along with some details of the problem, if you want a replacement part. We will arrange within 48 hours. If there is out of stock, we will reply with a shipping date.

•The product must be used in accordance with the instructions provided. For health reasons.

•For other reasons, if the furniture needs to be returned, it must be cleaned and dried and operated within 30 days of receipt.

Type of Warranty Claim

•Failure to follow the furniture instructions will invalidate the warranty. Attention please.

•Does not include damage during installation, but includes damage during transportation.

Scope of responsibility

•Shall not bear any responsibility for misuse or user damage and / or loss of parts during the installation of furniture.

•After using, the damage and scratches of the furniture are not covered by the warranty.

The Warranty Relates to All Bought in The Us and Covers The Following Areas

•Sheet parts: 1 month from the date of purchase.

•Electrical parts: 1 month from the date of purchase.

RETURNS

CHANGED YOUR MIND AND NEED TO RETURN YOU ITEM?

PLEASE FOLLOW THE BELOW INSTRUCTIONS:

- If you have purchased and have simply changed your mind, follow the retailer's instructions for returns.

DEFECTIVE ITEMS

- If your item is defective in any way, i.e. it doesn't work but you can't identify why, in the first instance, please call us.

DAMAGED ITEMS

- If you receive an order with obvious shipping damage from the retailer, then we suggest the delivery is refused. If the delivery has been accepted and then shipping damage is found, please follow the specific instructions advised by the retailer.
  In all circumstances please save all packaging material and paperwork for the order. Please be aware that if you dispose of packaging material or attempt to return the merchandise without contacting the fulfiller, you jeopardise your chances of making a claim, and you may not receive a credit for the return.