3-Door Wardrobe
Detailed Dimensions

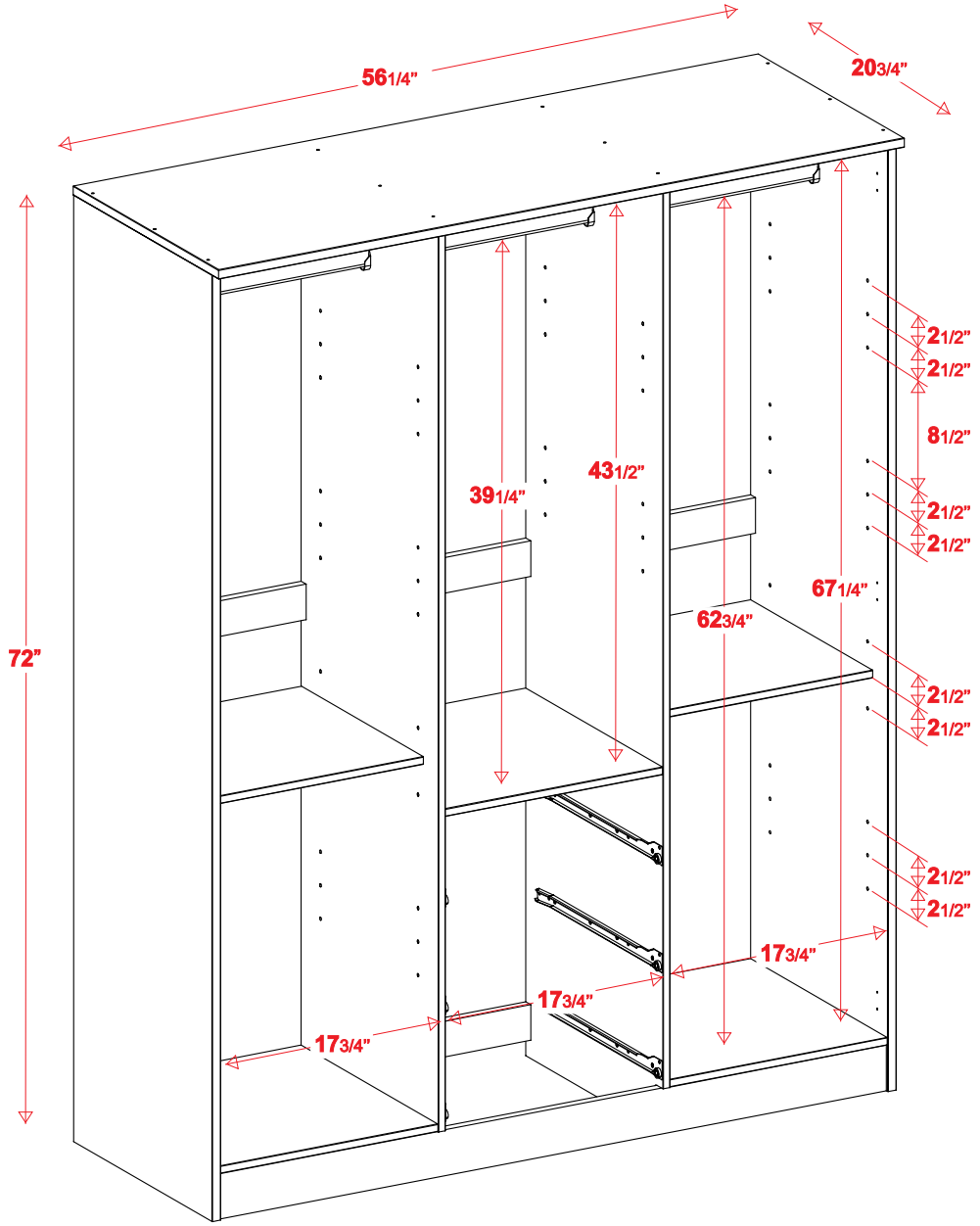

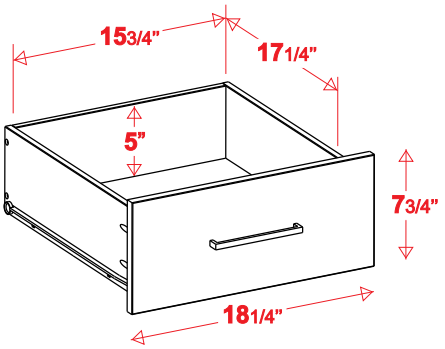

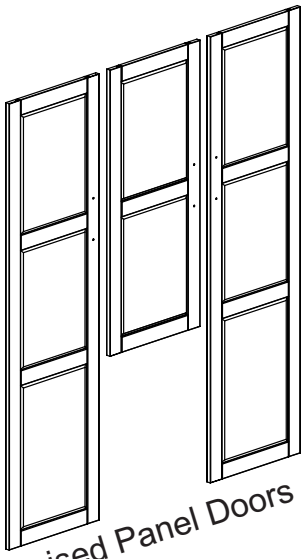

Raised Panel Doors

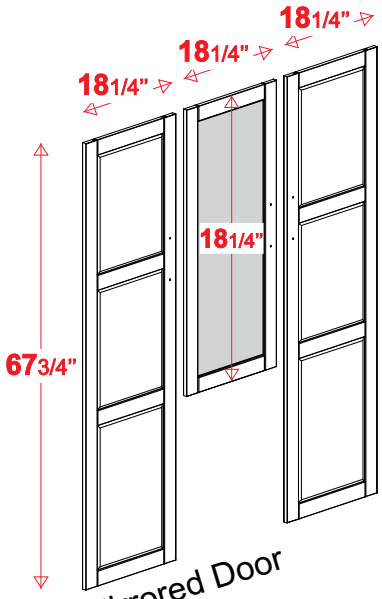

Mirrored Door