Instruction Manual

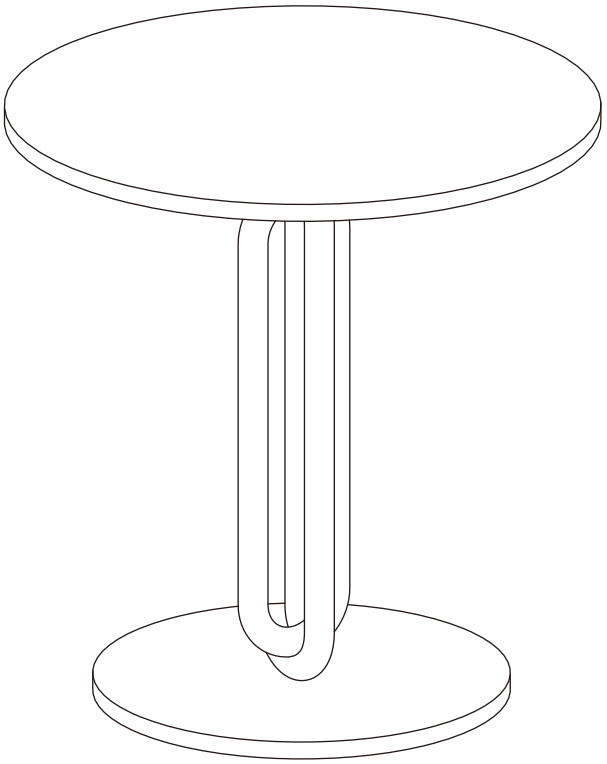

Parts List

 Ax4	 Bx1		

Assembly Steps 1

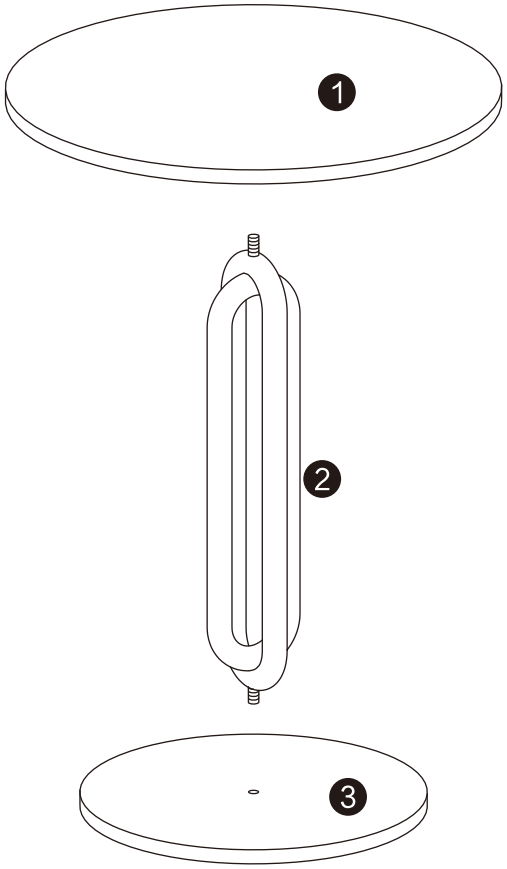

Assembly Steps 2

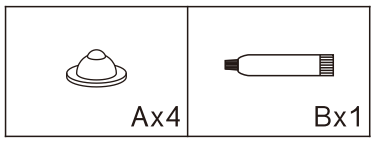

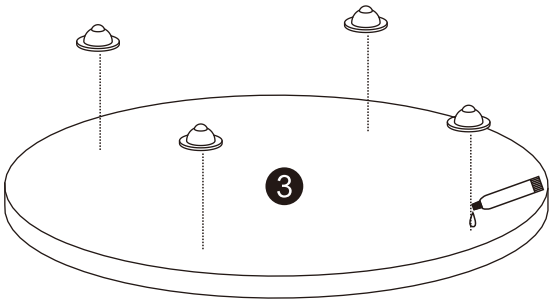

Assembly Steps 3

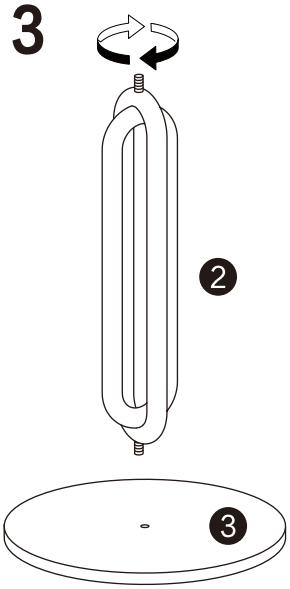

Assembly Steps 4

