48 BATHROOM VANITY

Features:

. Two Functioning Doors and Two Drawers
. Adjustable Doors and Drawers
. Luxurious Pure White Quartz Countertop
. Soft Closing Hardware
. Countertop Pre-drilleded for a Single Hole Faucet
. Multi-stage Painting to Ensure Durability and Consistency

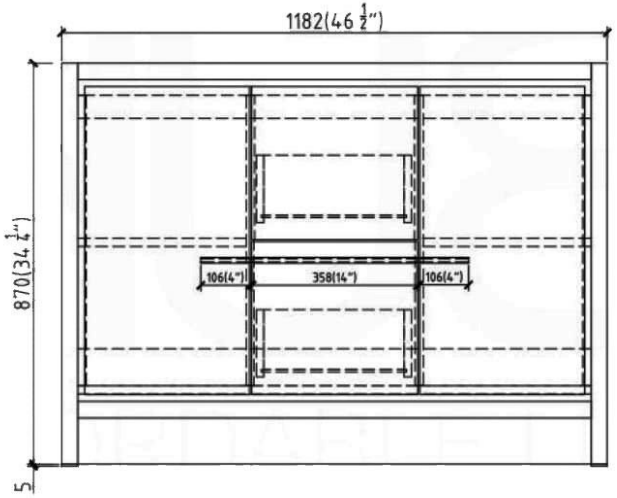

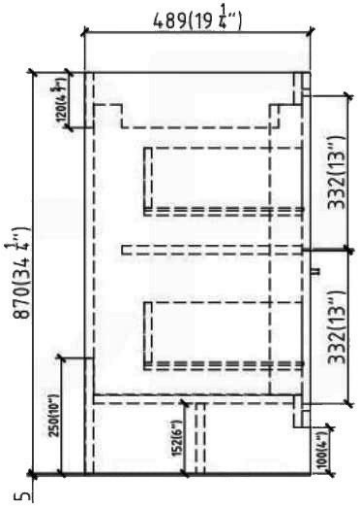

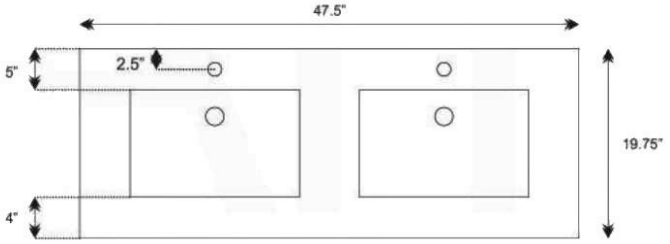

SINK CUT OUT OPENING
15.75"W x 10.75"D

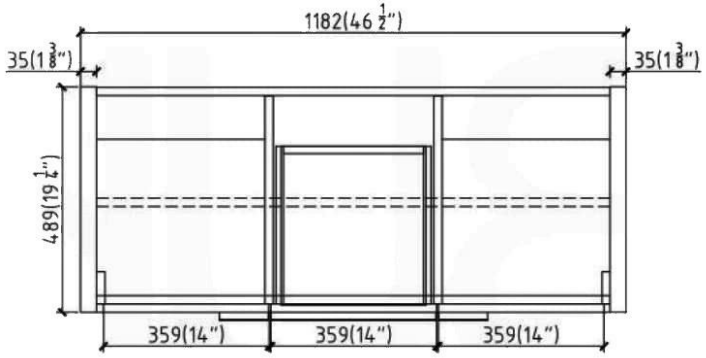

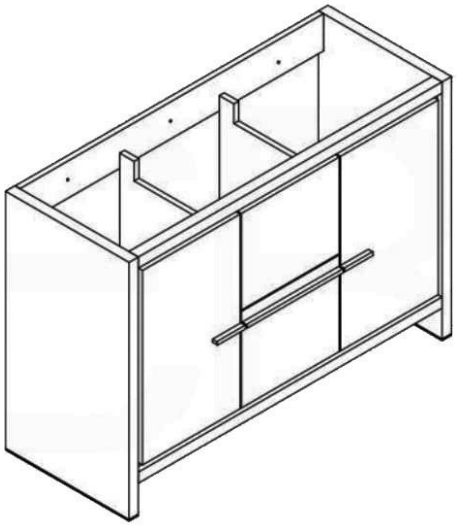

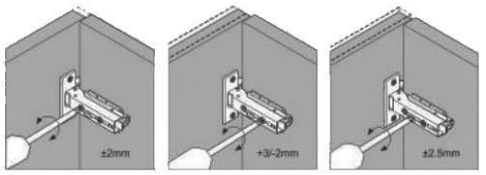

Side adjustment | Depth adjustment via worm gear | Height adjustment via base plate

Dimensions:	width	depth	height
inches	46.5"	19" 1/4	34" 1/4
mm	1182	489	870

NOTE: DIMENSIONS AND TECHNICAL DETAILS ARE SUBJECT TO CHANGE WITHOUT NOTICE

All rights reserved. The authors retain all copyrights in any text, graphic images and photos in this book. No part of this publication may be reproduced or transmitted in any form or by any means, electronic or mechanical, including photocopying, recording, or any information storage and retrieval system, without permission in writing from the authors.