Dimensions

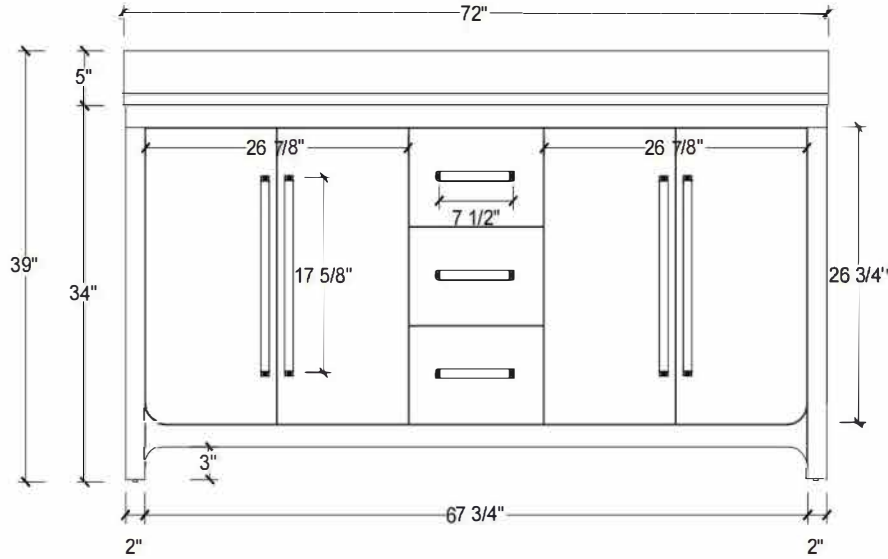
72"
5"
26 7/8"
26 7/8"
7 1/2"
39"
34"
17 5/8"
26 3/4"
3"
67 3/4"
2"
2"

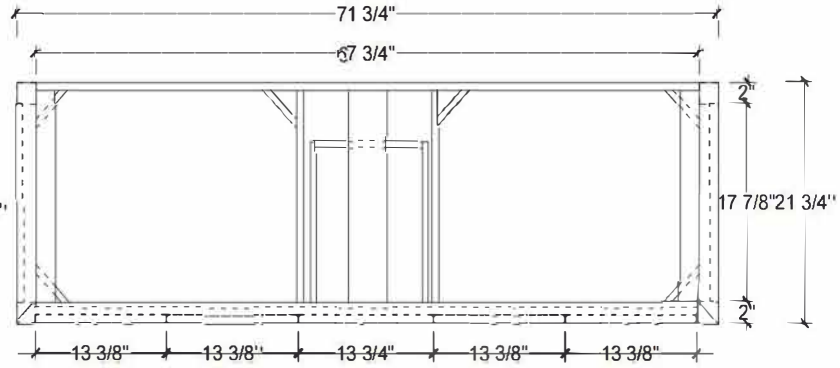
71 3/4"
67 3/4"
2"
17 7/8"
21 3/4"
2"
13 3/8"
13 3/8"
13 3/4"
13 3/8"
13 3/8"

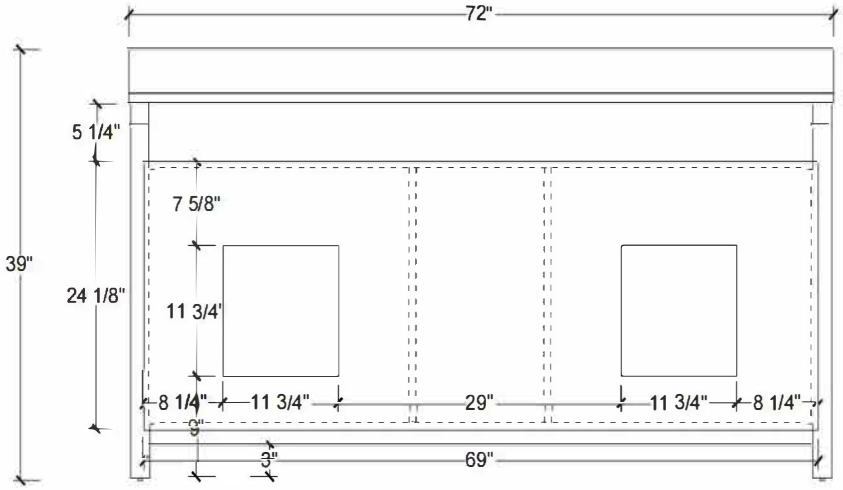
72"
5 1/4"
7 5/8"
39"
24 1/8"
11 3/4'
8 1/4"
11 3/4"
29"
11 3/4"
8 1/4"
3"
3"
69"

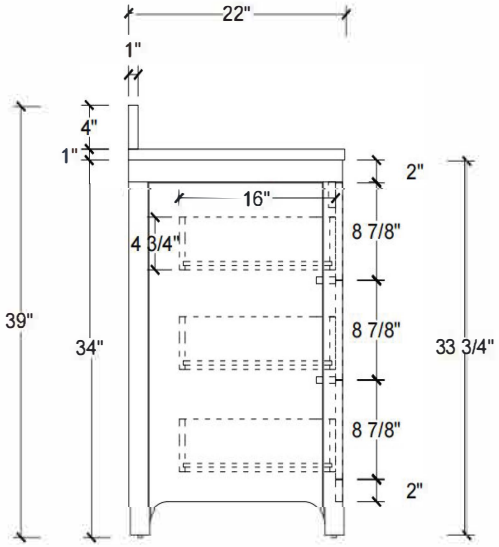
22"
1"
4"
1"
16"
4 3/4"
2"
8 7/8"
8 7/8"
8 7/8"
2"
39"
34"
33 3/4"

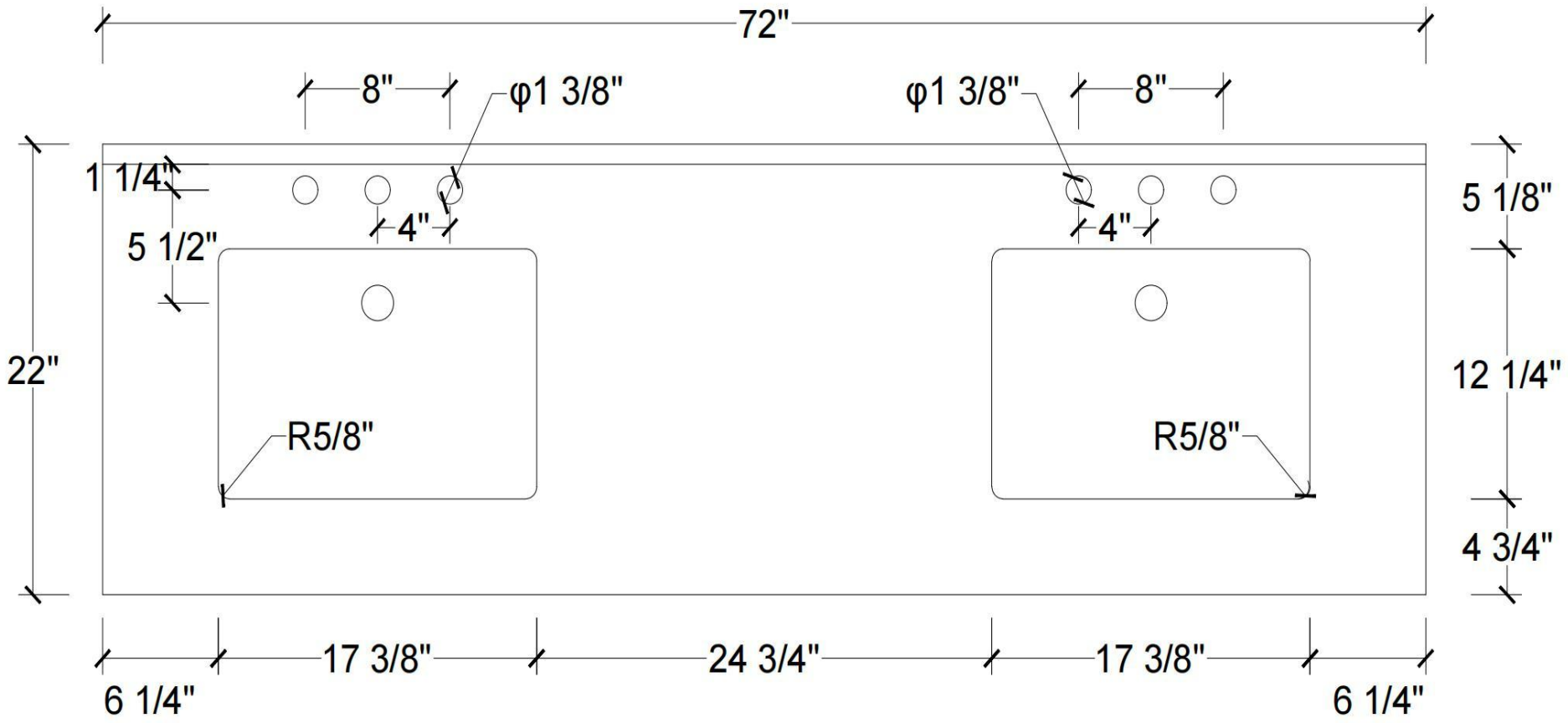
72"
8"
φ1 3/8"
φ1 3/8"
8"
1 1/4"
5 1/2"
4"
4"
5 1/8"
22"
12 1/4"
R5/8"
R5/8"
4 3/4"
6 1/4"
17 3/8"
24 3/4"
17 3/8"
6 1/4"

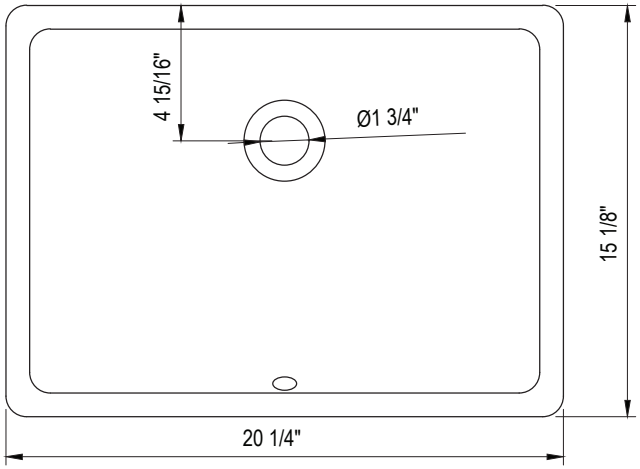
4 15/16"
Ø1 3/4"
15 1/8"
20 1/4"

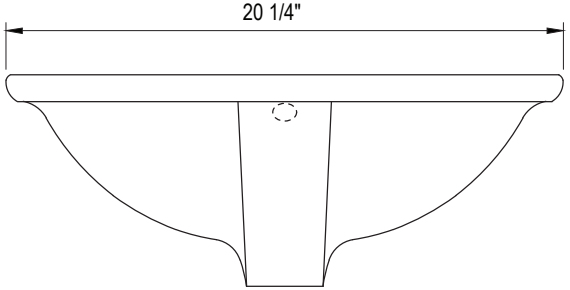
20 1/4"

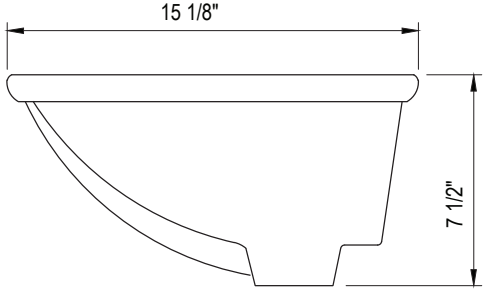
15 1/8"
7 1/2"