ASSEMBLY INSTRUCTION

ITEM NO. HKOFDK029

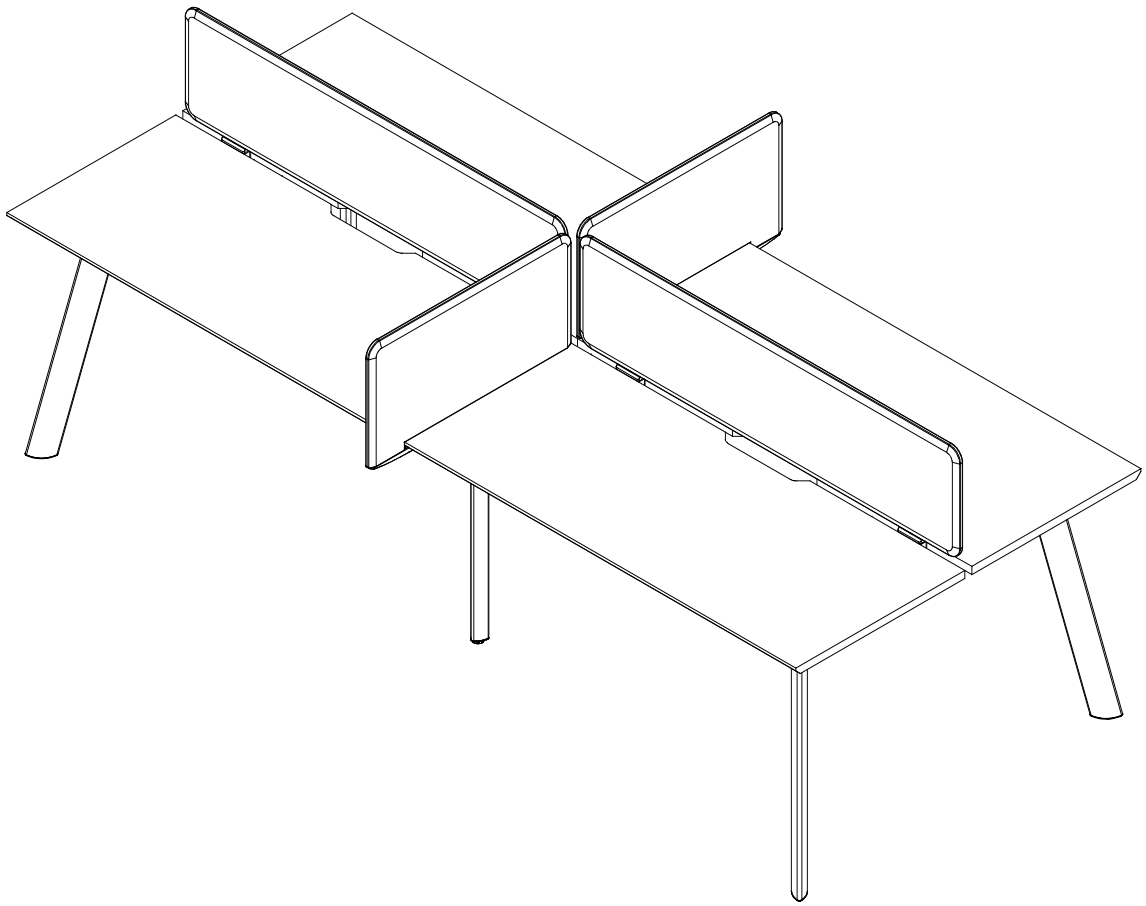

I

IMPORTANT NOTICE

Workspace Safety
Keep the workspace clear of clutter and ensure it's well-lit. A clean, flat surface is essential.

Read Instructions
Read the entire assembly guide before starting. Skipping steps can compromise safety.

Use Proper Tools
Use the tools provided or recommended. Avoid overtightening screws.

Secure Furniture
Anchor tall or heavy furniture to the wall to prevent tipping. This is crucial in homes with children or pets.

Handle Small Parts
Keep small parts away from children and pets to avoid choking hazards.

Get Help
Don't hesitate to ask for help with heavy or complex pieces.

Inspect Regularly
Periodically check for loose screws or wobbly parts and tighten as needed.

Follow these tips for a safe assembly process.



PRE-ASSEMBLY PREPARATION

Before assembly, place all furniture parts on a soft surface, such as a blanket or the original packaging cardboard, to prevent damage to the floor or components from accidental drops and to avoid scratching the surfaces.

ASSEMBLY DIAGRAM

1. Refer to the exploded view below for the approximate location of each component.
2. Each part is labeled for easy identification.
3. Follow the assembly instructions carefully to ensure proper installation.

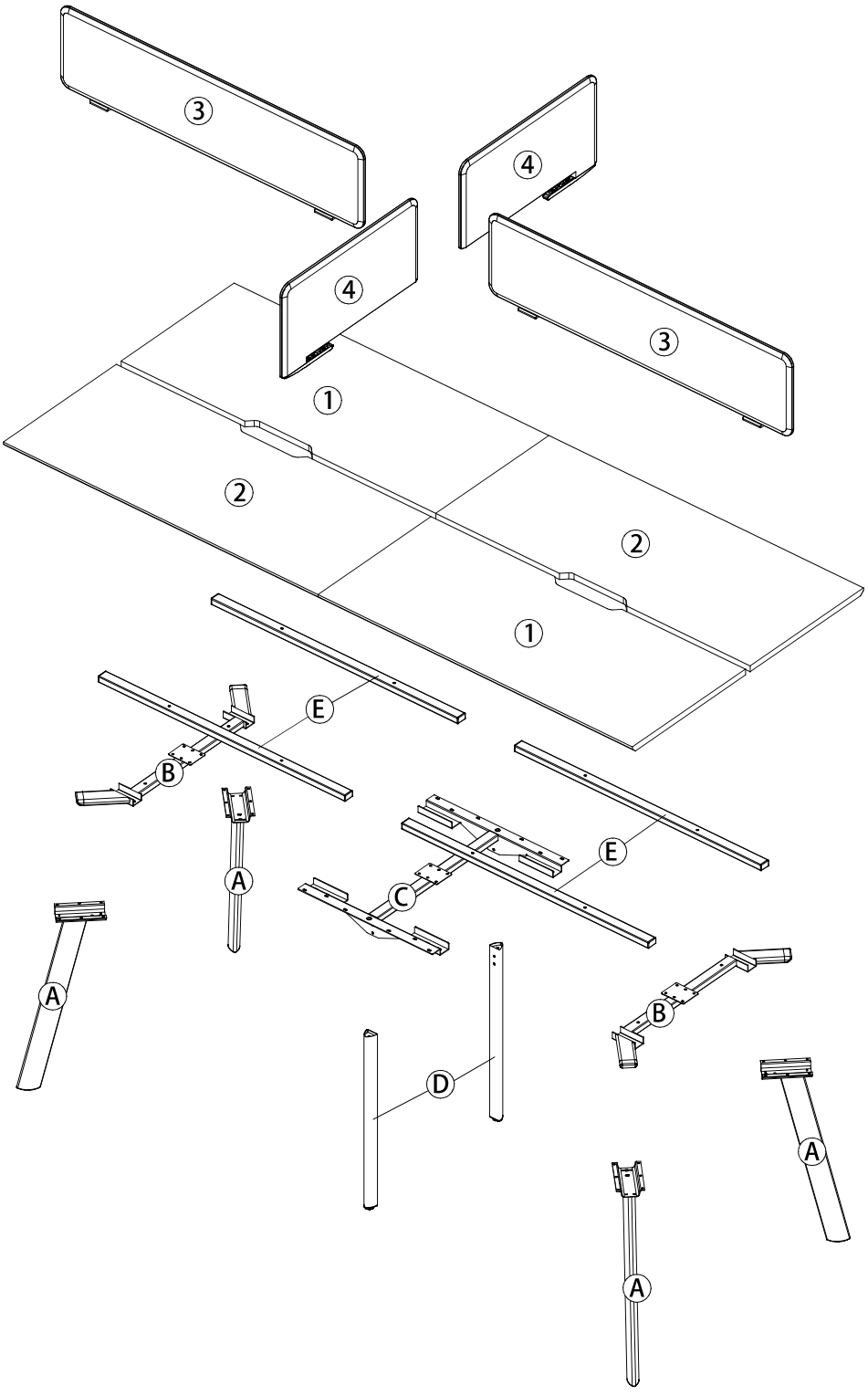

PARTS LIST

No.	Description	QTY	No.	Description	QTY
1	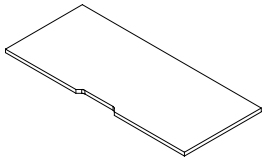	2	3		2
2	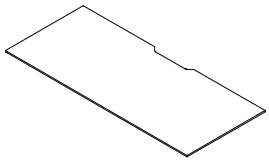	2	4	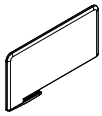	2

HARDWARE LIST

No.	Description	QTY	No.	Description	QTY
A	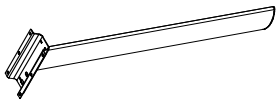	4	H	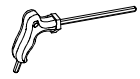 5mm	1
B	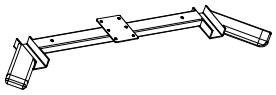	2	I	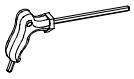 4mm	1
C	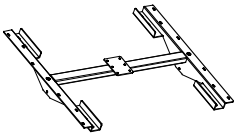	1	J	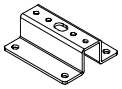	4
D		2	K	 M8X12	32
E	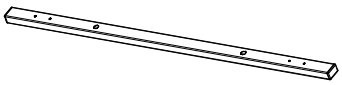	4	L	 M8X20	2
F	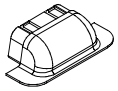	4	M	 ST6.3X20	84
G	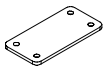	2			

CAUTION: Please confirm the parts list before installation.

YOU MAY NEED (NOT SUPPLIED)

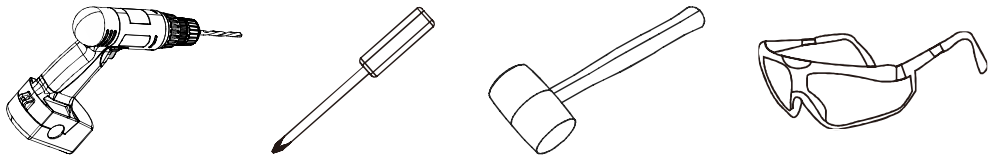

1

X2

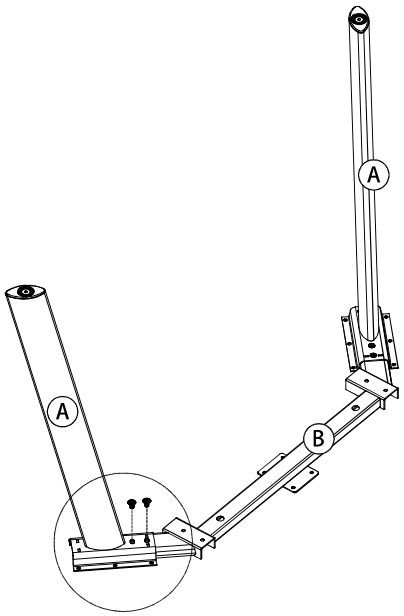

K 8PCS

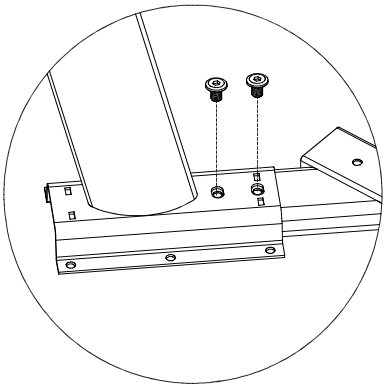

2

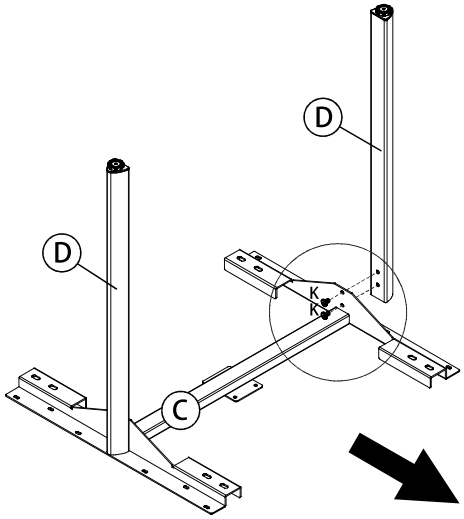

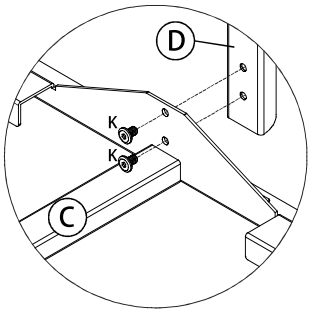

K 4PCS

L 2PCS

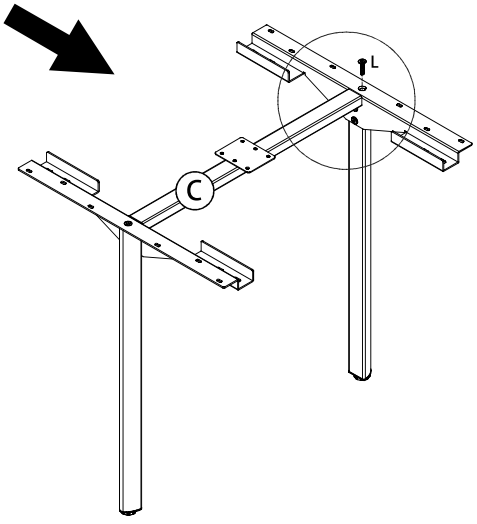

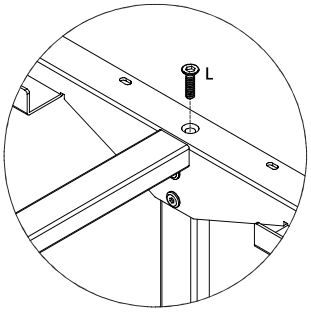

3

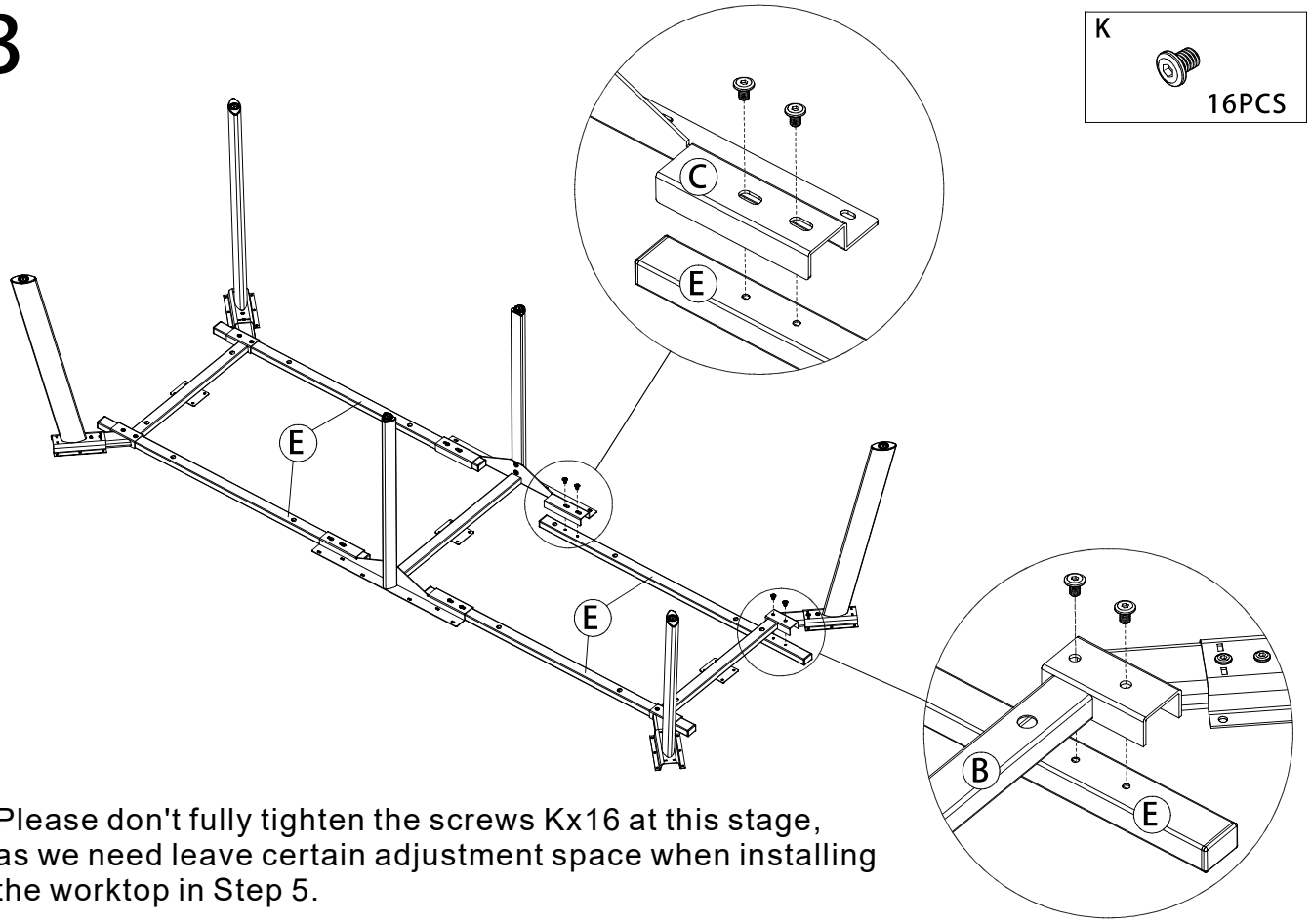

Please don't fully tighten the screws Kx16 at this stage, as we need leave certain adjustment space when installing the worktop in Step 5.

4

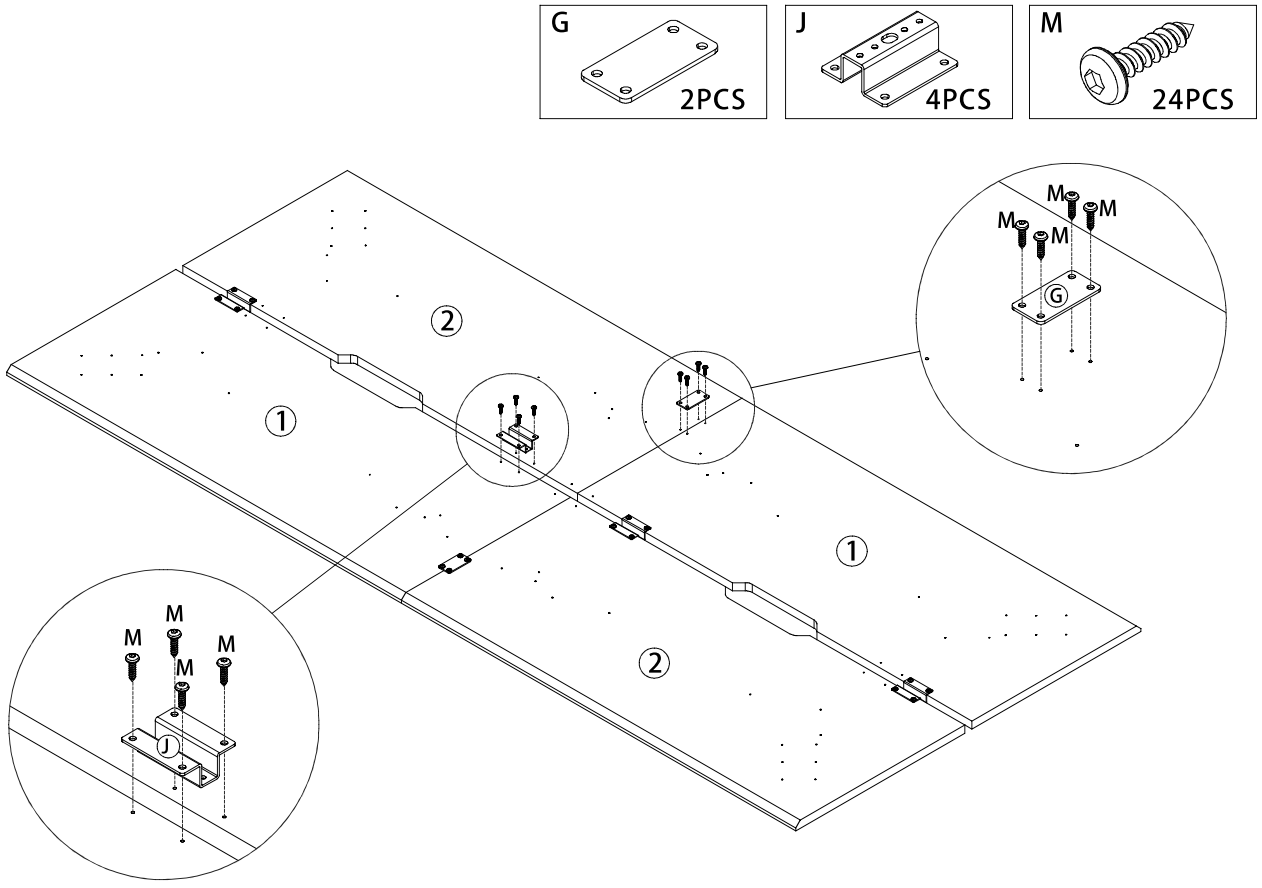

5

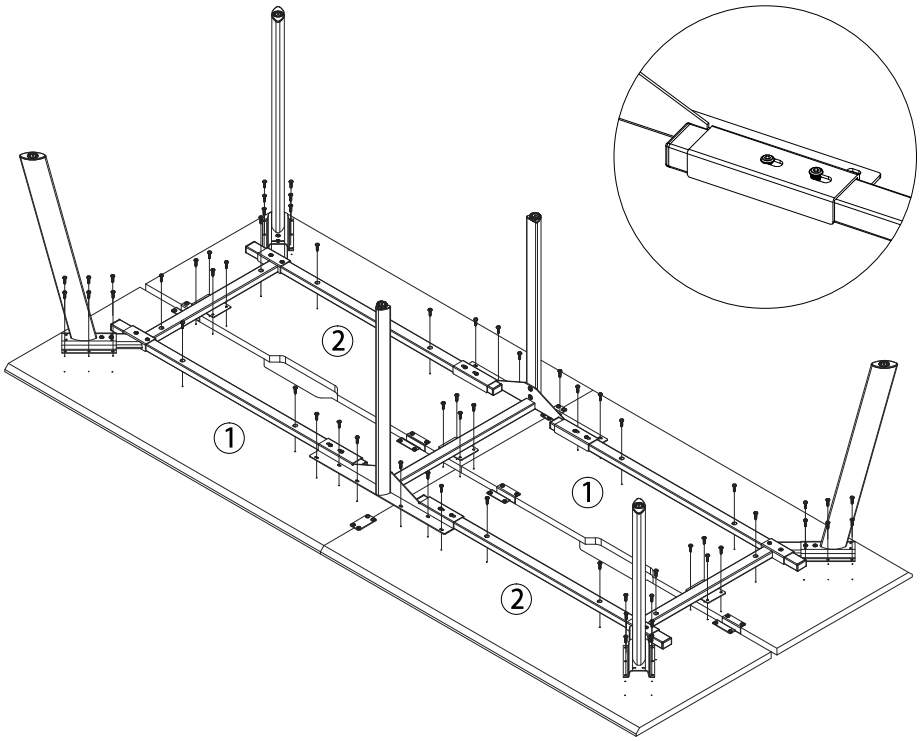

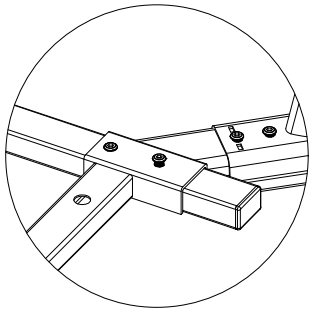

M

60PCS

Please fasten all screw Mx60 prior to tightening all Screw Kx16.

6

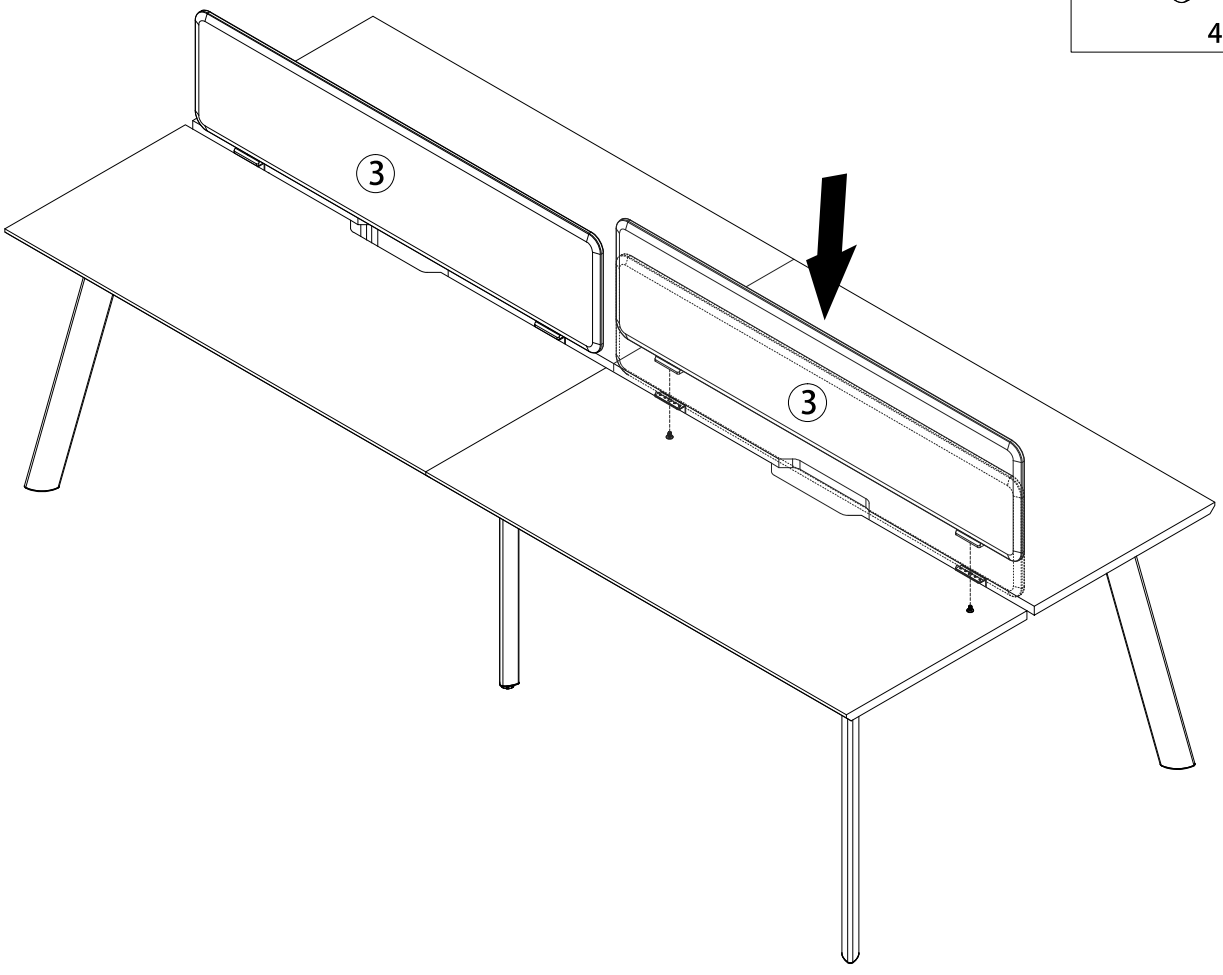

K

4PCS

7

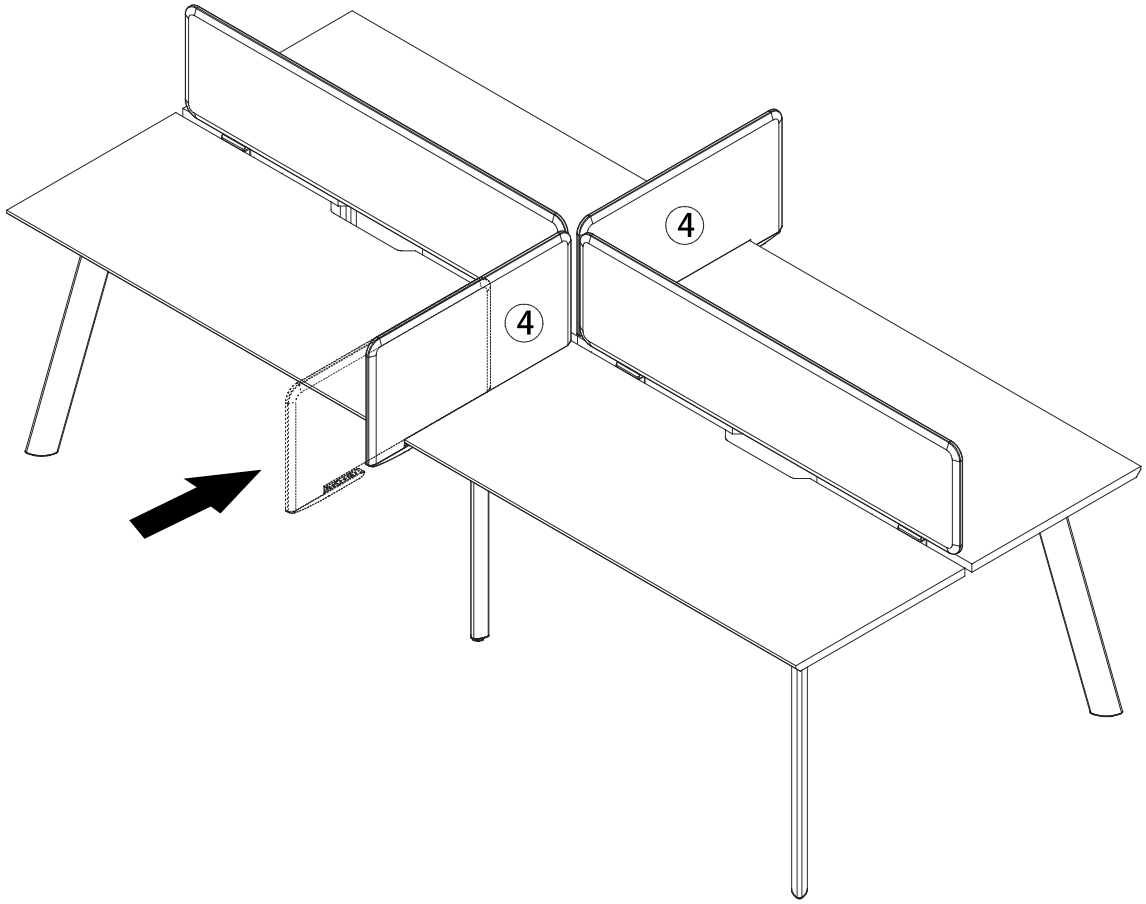

8

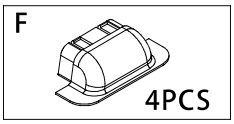

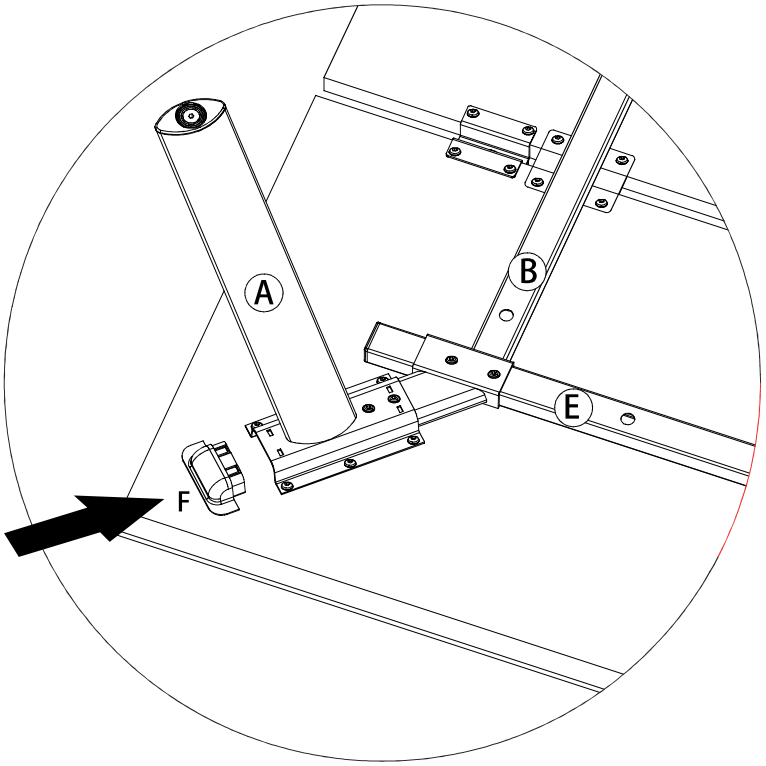

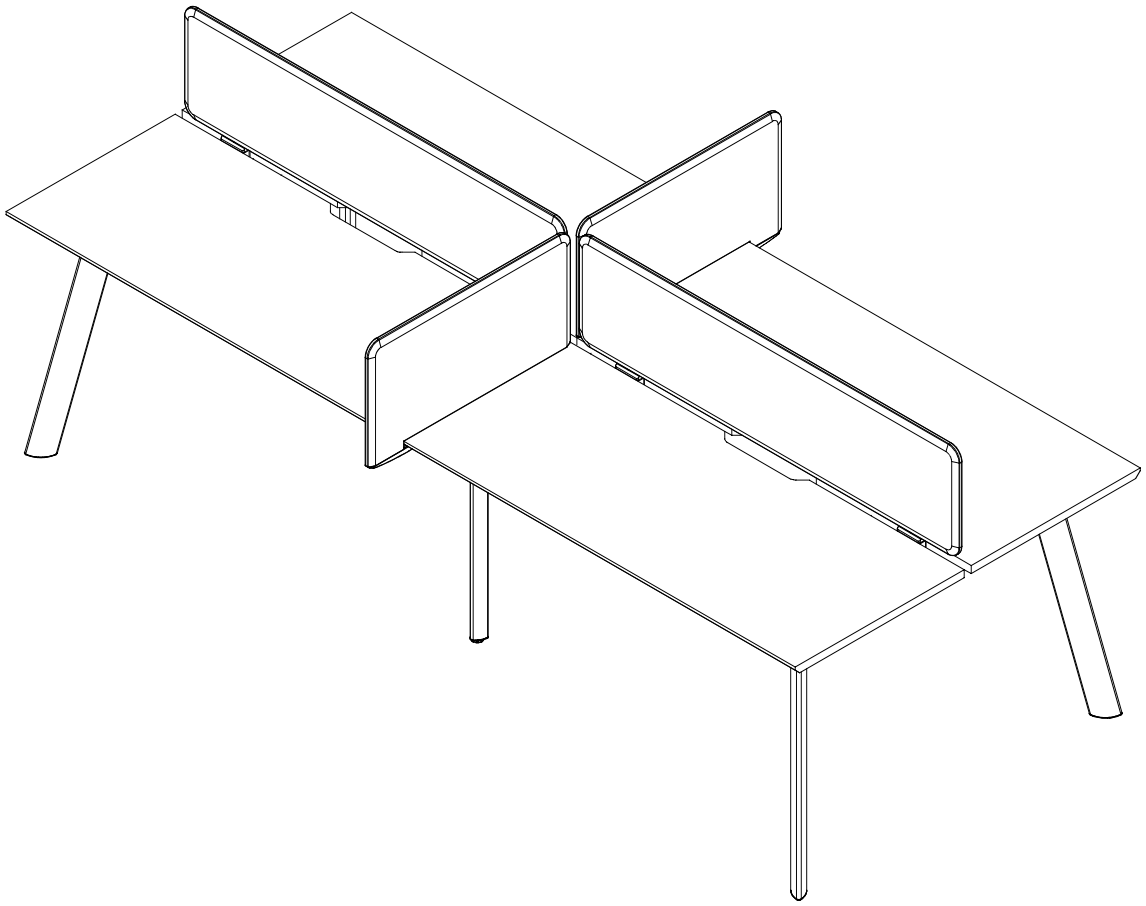

Thank you very much for purchasing from us.

We have always been trying to provide the best service and reliable products for every customer.

However,accident may happen sometimes,please contact us to resolve any issue before leaving a negative feedback.

Please contact at: christyningxing@nxubay.com or
via Phone#3233938260 at EST 1PM-5PM

Many thanks and welcome to our shop again!