USER'S MANUAL

Borealis Tall Hexagon Pendant

CAUTION: SHUT OFF THE POWER AT THE MAIN UTILITY BOX BEFORE DOING ANY ELECTRICAL CONNECTIONS TO AVOID ANY RISK OF ELECTRICAL HAZARD. ENSURE THE CEILING CAN SUPPORT THE WEIGHT OF THE PRODUCT.

Important Safety Instructions:

• These instructions are provided for your safety. It is important that they are read carefully before use to ensure safe operation of the product.
• Professional installation is recommended.
• Ask for assistance for ceiling mounting.
• This fixture has been rated for up to (1) 60-watt maximum TYPE A standard incandescent light bulb (not included). Do not exceed the recommended wattage.

Warning:

• THIS PRODUCT MUST BE INSTALLED IN ACCORDANCE WITH THE APPLICABLE INSTALLATION CODES BY A PERSON FAMILIAR WITH THE CONSTRUCTION AND OPERATION OF THE PRODUCT AND THE HAZARDS INVOLVED.
• To reduce the risk of fire, electrical shock or personal injury, always turn off light fixture and allow it to cool prior to replacing light bulb.
• Do not touch bulb when fixture is turned on. Do not look directly at lit bulb.
• Keep flammable materials away from lit bulb.
• Check the cable properly for any loose or damage connections.
• When the unit is no longer functioning, do not attempt to fix it by yourself. Only a qualified technician is allowed to disassemble and repair.
• If the external flexible cable cord of this luminaire is damaged it shall be exclusively replaced by a qualified electrician in order to avoid hazard.
• For indoor use only.

Hardware Included inside the package:



A.Circular Strap x 1 B. tapping screw x 2 C. ball knob x 2 D.Wire cap x3 E. Chain F. Lock Ring

Installation Instructions:

1. SHUT OFF THE MAIN ELECTRICAL SUPPLY FROM THE MAIN FUSE BOX/CIRCUIT BREAKER.
2. Please check to make sure you have all parts before starting assembly.
3. Attach circular strap (A) to the junction box, secure by tapping screw(B)

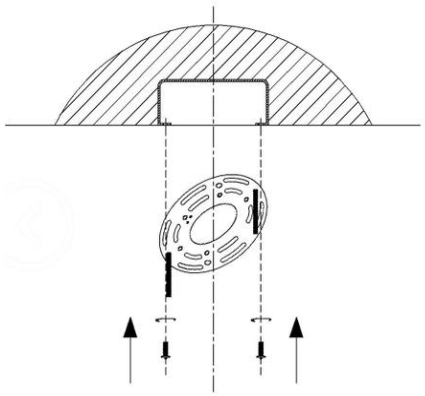

1. Establish electrical connections:

A.Connect the NEUTRAL FIXTURE WIRE to the NEUTRAL JUNCTION BOX WIRE (white),HOT FIXTURE WIRE to the HOT JUNCTION BOX WIRE (black). Fasten each together with a plastic wire cap (D) and wrap the connection with electrical tape. Be sure no wire strands are exposed

DO NOT REVERSE THE HOT AND NEUTRAL CONNECTIONS OR SAFETY WILL BE COMPROMISED

B.Attach the GROUND WIRE from the fixture to the GROUND JUNCTION BOX WIRE from the outlet (usually green or bare wire), Fasten each together with a Plastic wire cap (D) and wrap the connection with electrical tape.

Be sure that no wire strands are exposed. If your outlet box DOES NOT have a GROUND WIRE, be sure to insert the green ground screw into the circular strap(A) facing DOWN,
and wrap the fixture's bare ground wire around the ground screw.
IT IS IMPERATIVE THAT THE OUTLET BOX IN YOUR HOME BE PROPERLY GROUNDED.

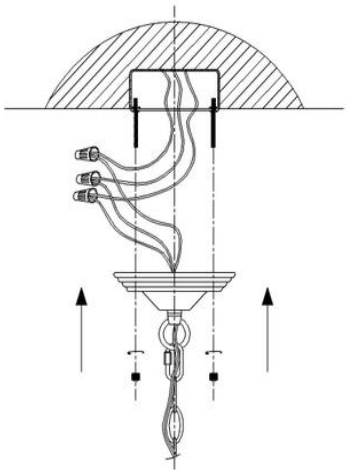

2.Gently tuck the wire connections. Pull ceiling canopy up to circular strap(A) through 2 threaded stub, tighten with ball knob (C),lift the chain(E), hang the lock ring(F) on to the canopy and close the openning, thus to attach the lampbody onto the canopy.

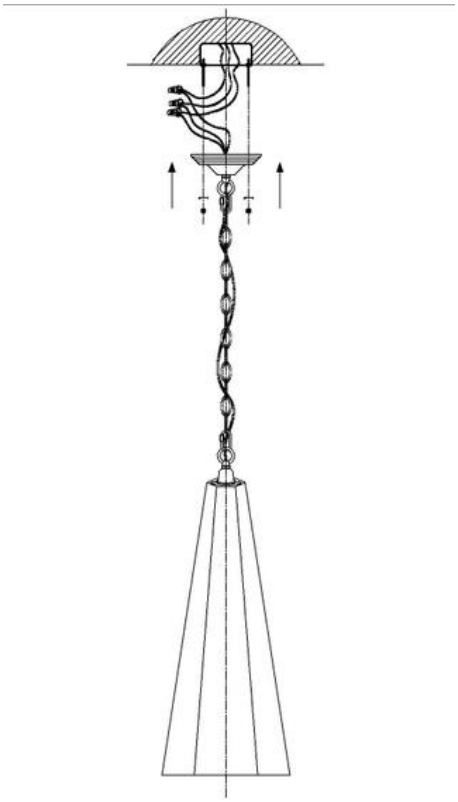

3. Insert (1) 60-watt maximum TYPE A standard incandescent light bulb (not included) into the socket.
DO NOT EXCEED THE RECOMMENDED WATTAGE.

4. Restore power to ceiling outlet junction box and test fixture.

5. Installation is complete.

Care Instructions: Do not use abrasive cleaning solution. Clean it using soft dry cloth or static duster.

Keep these instructions for future reference.