Assembly Instrusction

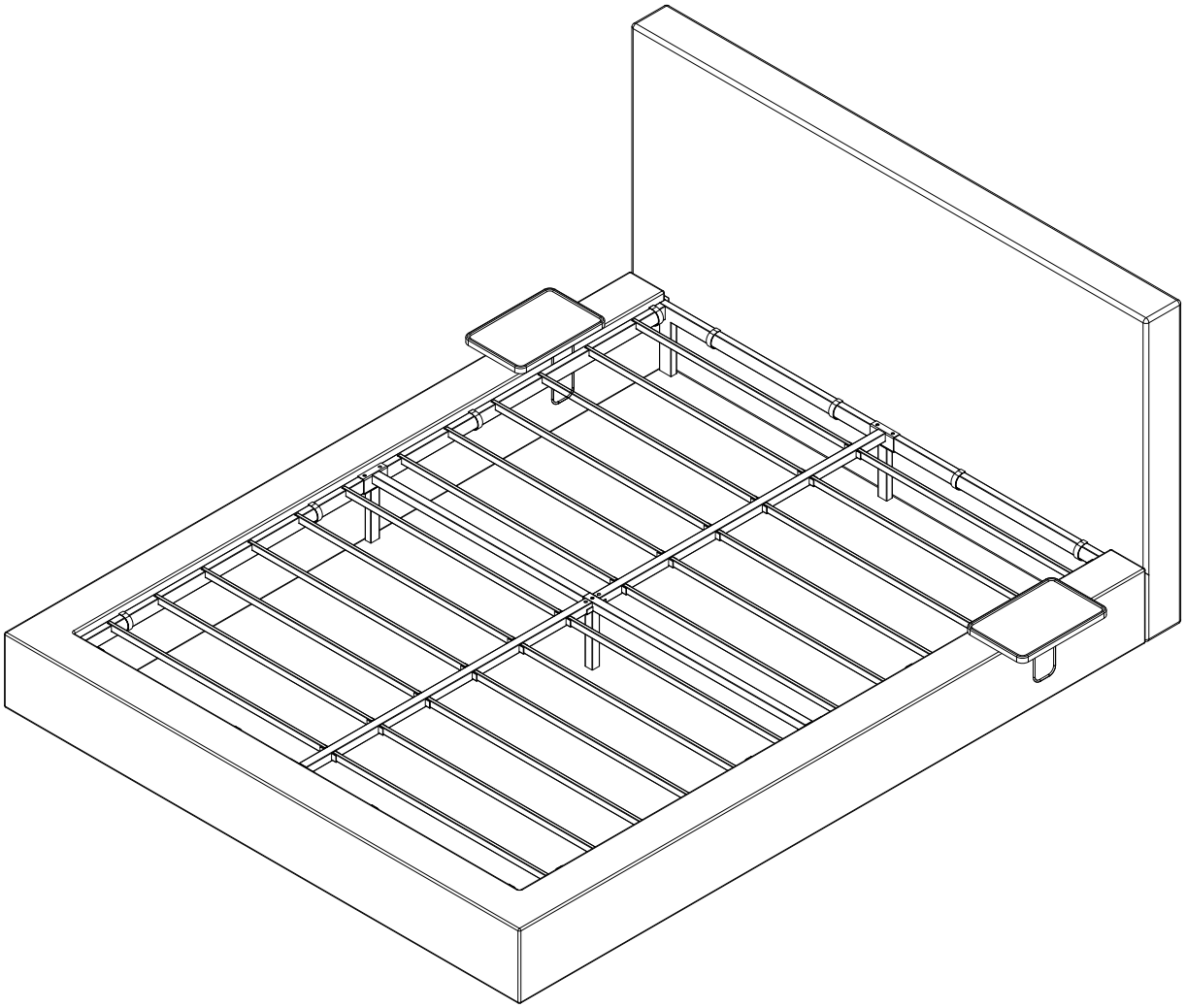

EN

General Guidelines

— Please read the following instructions carefully and use the product accordingly.
— Please keep this manual and hand it over when you transfer the product.
— This summary may not include every detail of all variations and considered steps. Please contact us when further information and help are needed.

Notes

— The product is intended for indoor use only. The product must be assembled and used in accordance with the provisions of the manual. Personal injury and / or damage to the product may occur if products are used outside of their intended purposes and/or if products have been changed/modified from their original design.
— The seller does not assume any responsibility or liability with respect to any injury/damage caused by incorrect assembly or improper use.
— Avoid long-term exposure to humid environments to prevent mildew.
— Keep the product away from fire sources and high temperatures. Do not expose the product to direct sunlight.
— Do not place any hot objects on the surface of the product.
— If there are any defective or missing parts after unpacking, please cease assembly immediately and contact us.
— Please assemble the item on a spacious surface and do not place the unwrapped product directly on the ground to avoid product damage.
— Please do not stand or sit on the wooden boards.
— Please wear gloves during the assembly and/or disassembly process to avoid scratches from any sharp edges.
— Please match the corresponding part and fitting based on the part number in the manual.
— If the part does not match with the fitting, please check the piece as specified in this manual.
— During assembly, first loosely align all screws with the corresponding pre-drilled holes and then tighten the screws one by one.
— Periodically inspect screw tightness while the product is in use. If necessary, retighten to ensure structural integrity.
— If you accidentally spill water or another liquid on the surface, immediately wipe clean with a dry towel.
— Please keep the product away from sharp, pointed objects and corrosive substances to prevent product damage.
— Please place this item on level, solid ground during use.

Warnings

— During assembly, keep all small parts out of the reach of children. It may be fatal if swallowed or inhaled.
— Children should not climb or play on the product in order to avoid tipping over the furniture and causing serious injury.
— To avoid the potential dangers of suffocation, please keep all parts and packaging (film, plastic bags, foam, etc.) away from babies and children.
— Keep sharp objects and corrosive items away from the product to avoid any damage or injury.
— Do not shake or move violently during use to avoid tipping over the product.

Part list

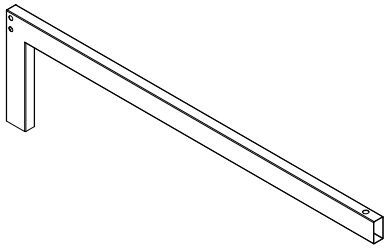

1 X2

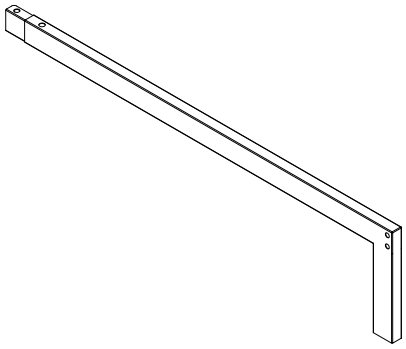

2 X2

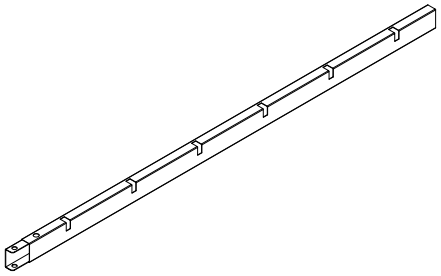

3 X2

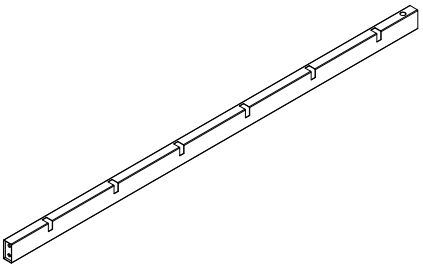

4 X2

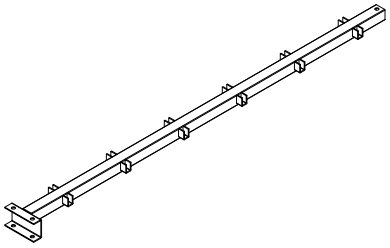

5 X2

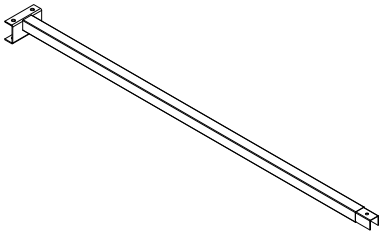

6 X1

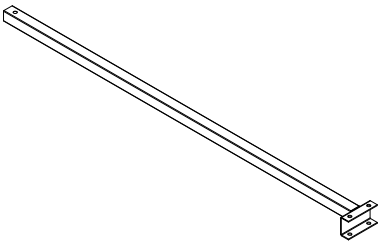

7 X1

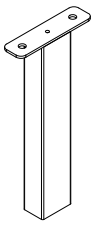

8 X4

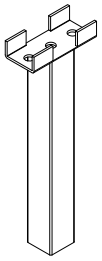

9 X1

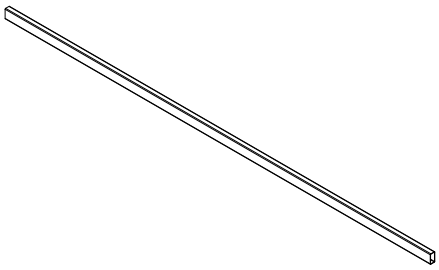

10 X24

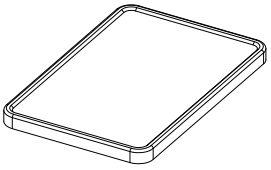

11 X2

12 X4

Hardware list

Unpack the vacuum compression bag to retrieve Component A and Component B

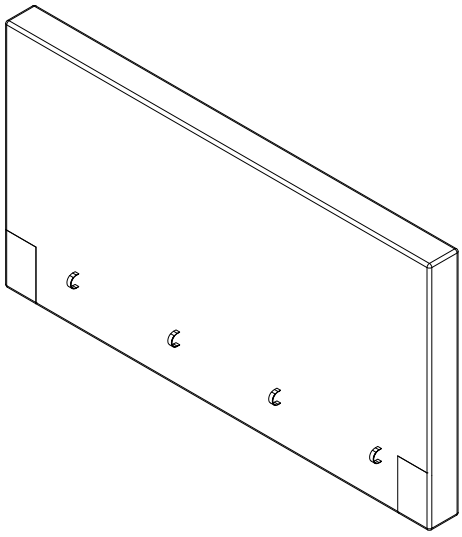

Ⓐ X1

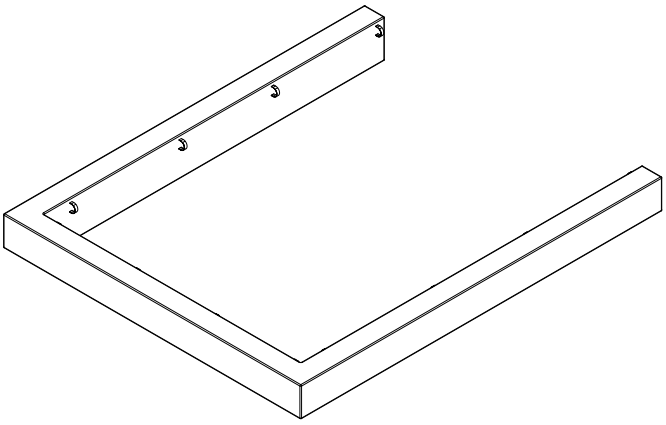

Ⓑ X1

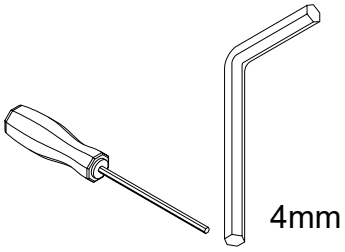

Ⓒ X1

Ⓓ X11+1

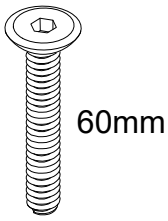

Ⓔ X8+1

Ⓕ X8+1

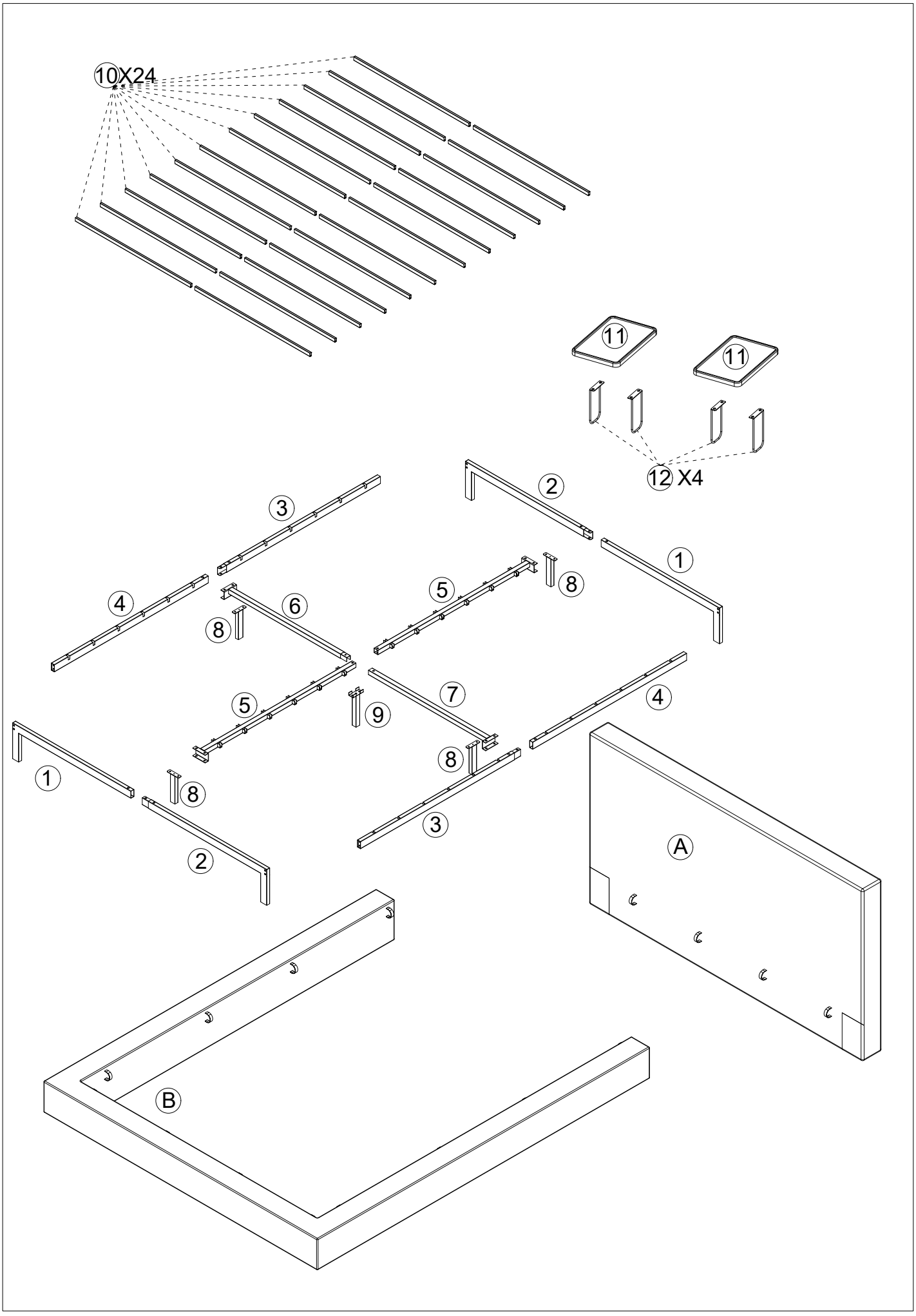
10X24
11
11
12 X4
2
3
1
4
6
5
8
8
5
7
4
9
8
1
8
3
2
A
B

1

Note the front and back sides of tube 5, with the grooves facing up.

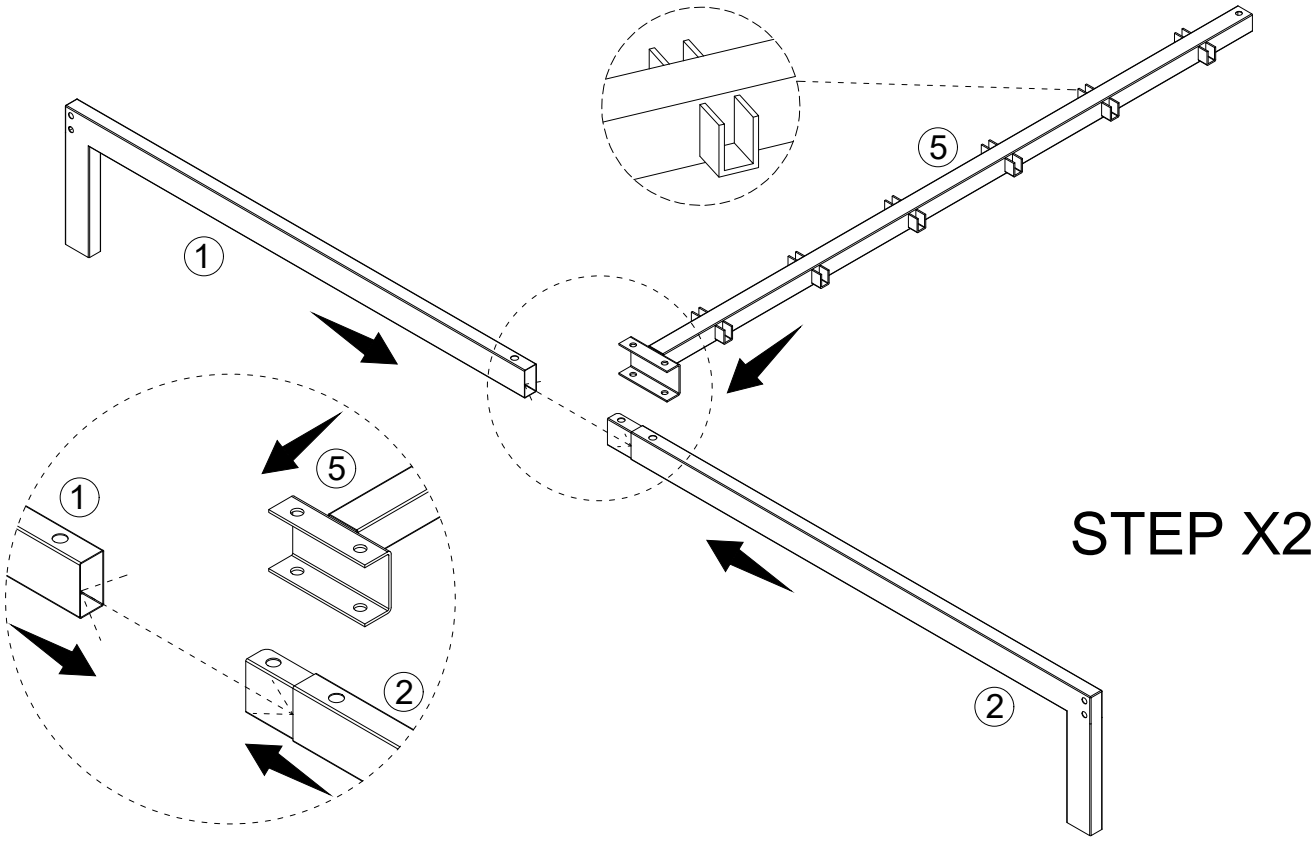

⚠ Ensure that parts 1 and 2 are inserted into each other, and then clip them into fasteners 5

2

Note the front and back sides of tube 5, with the grooves facing up.

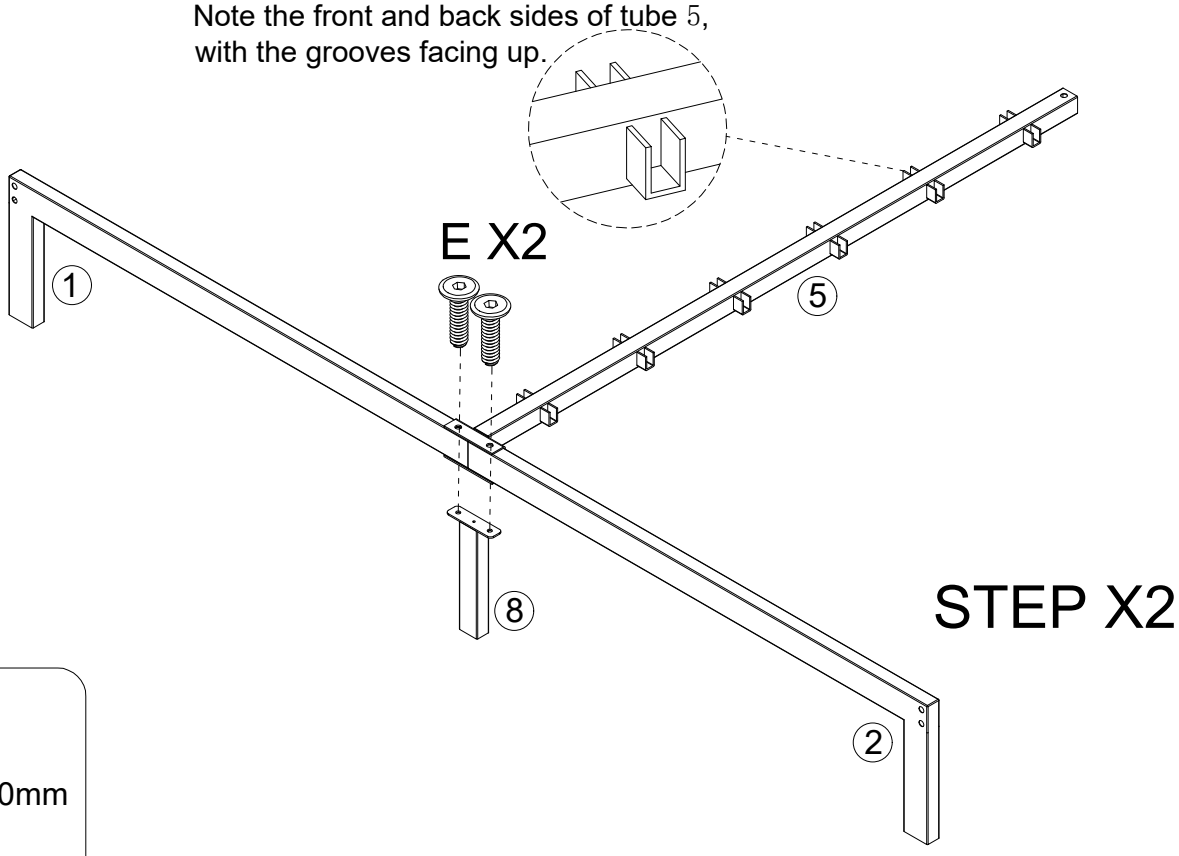

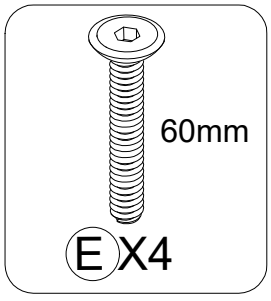

3

⚠ Ensure that parts 3 and 4 are inserted into each other, and then clip them into fasteners 6 and 7

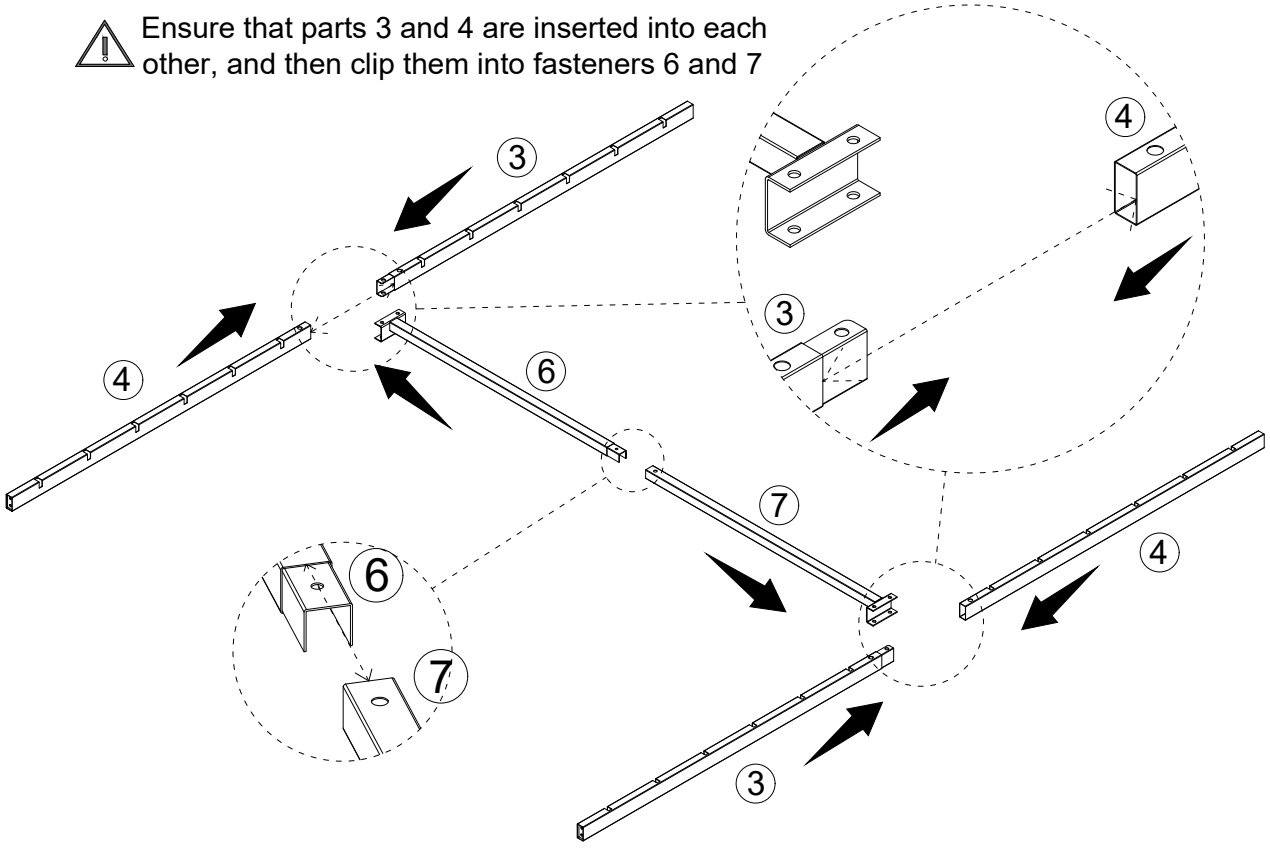

4

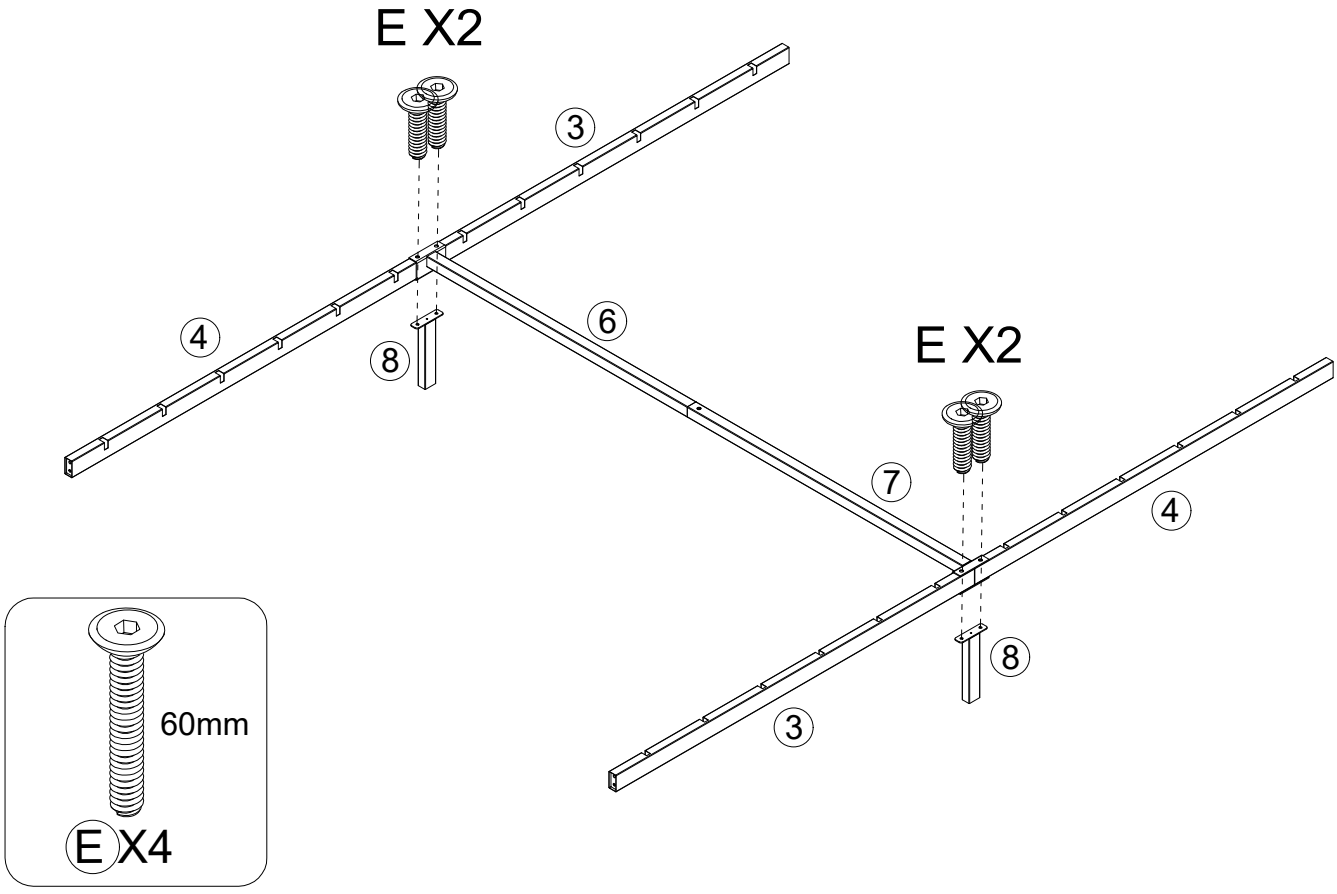

5

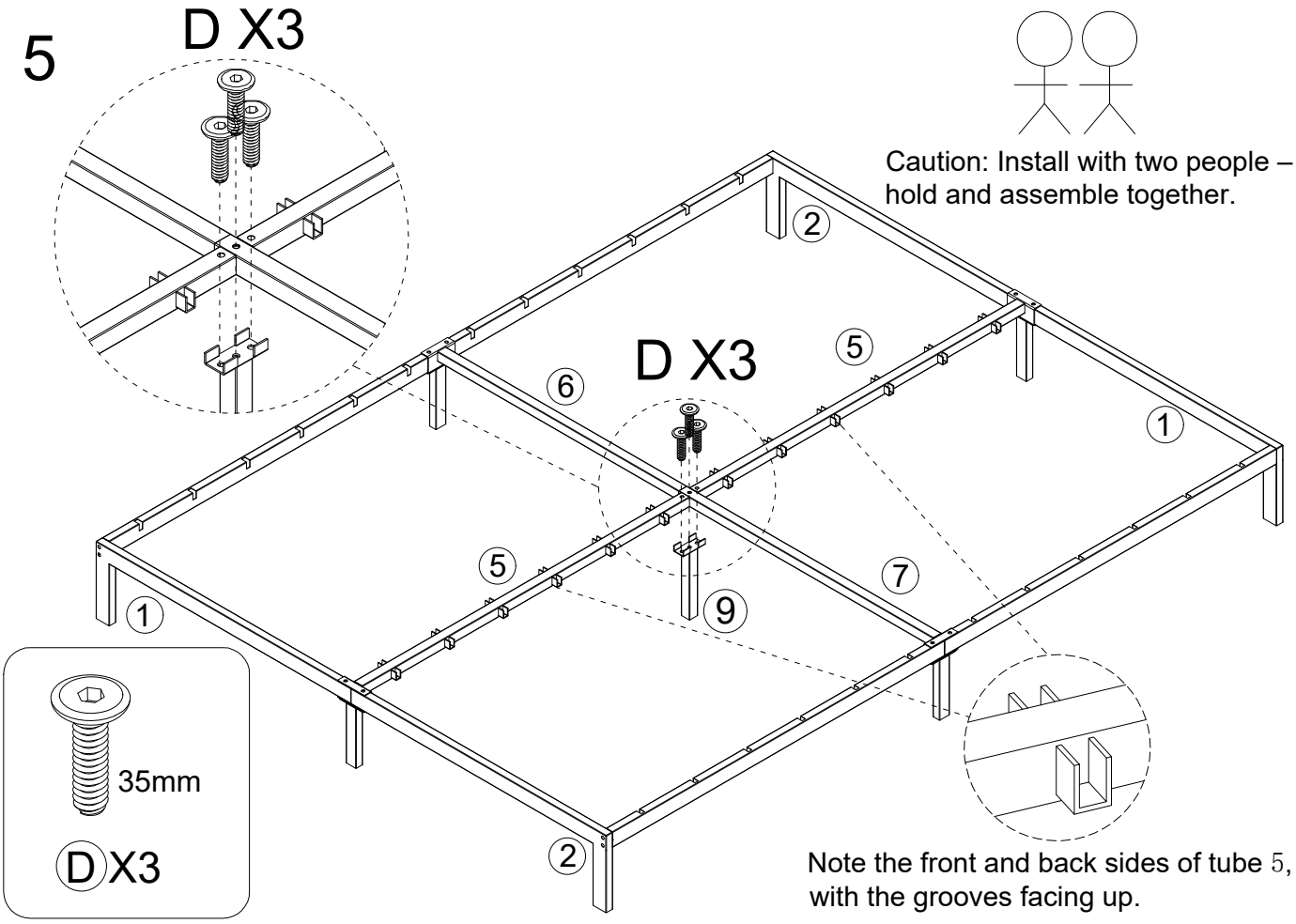

Caution: Install with two people – hold and assemble together.

Note the front and back sides of tube 5, with the grooves facing up.

6

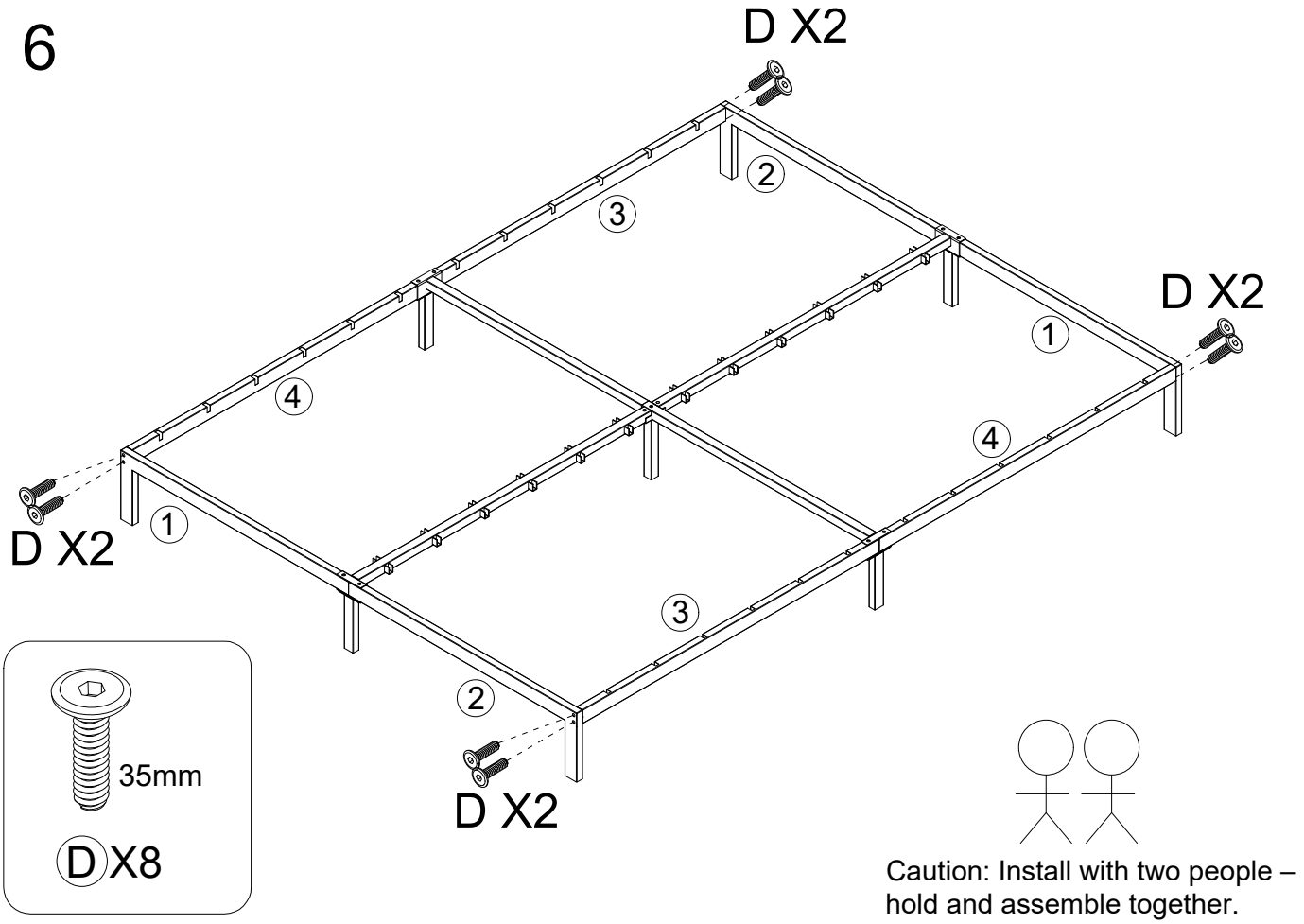

Caution: Install with two people – hold and assemble together.

7

Unfold Part B, then install to the bed frame

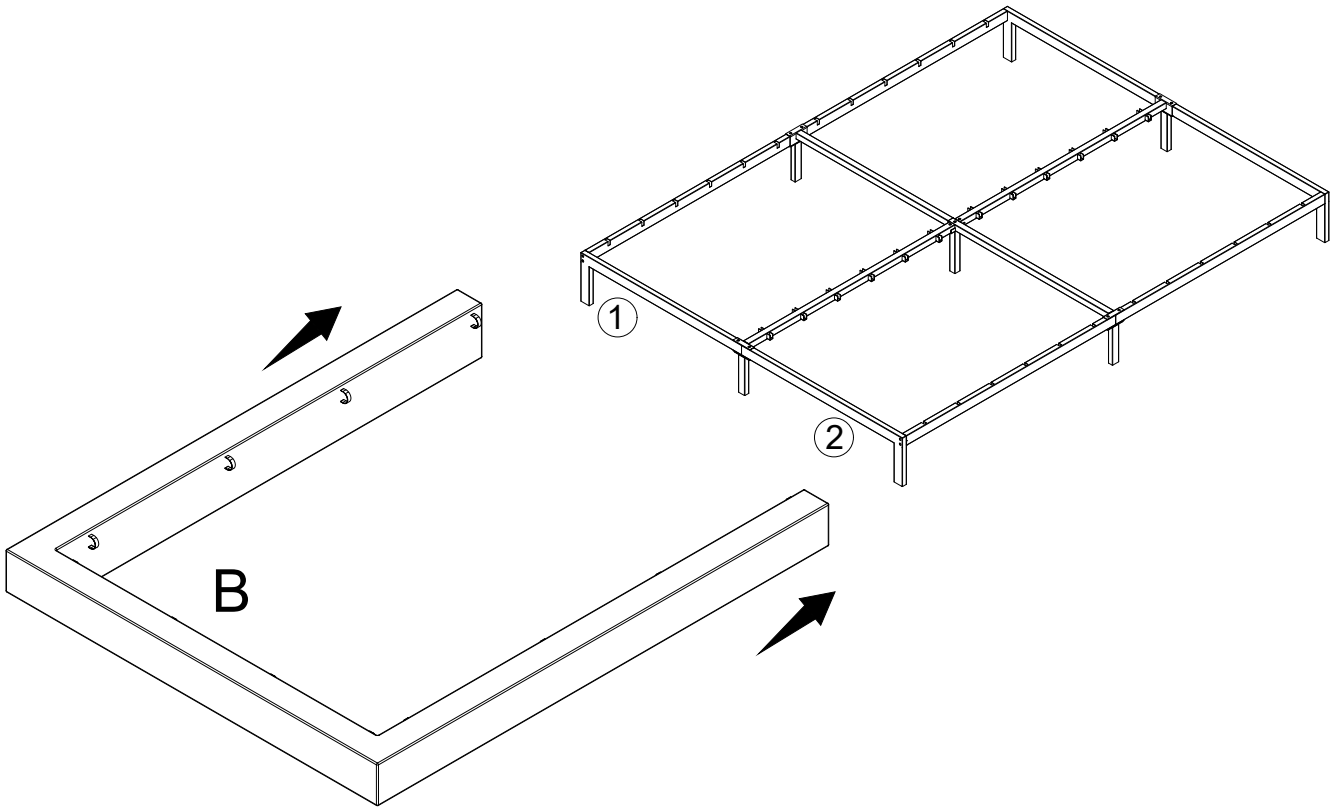

8

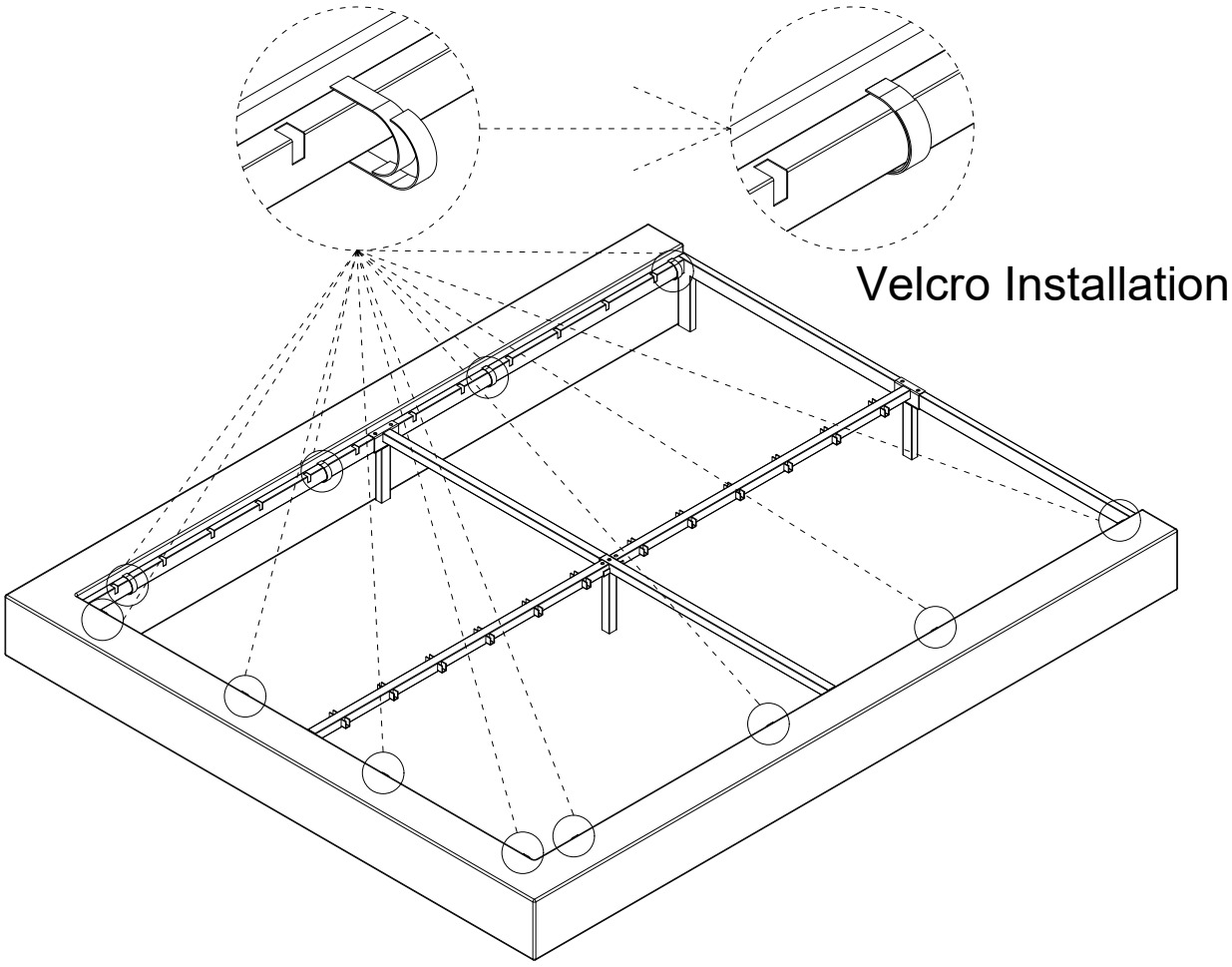

9

Locate a suitable position to install the headboard. When installing the headboard, peel off the three stickers on the top of its back and stick them onto the wall. (Note: Ensure the wall surface is clean and tidy to prevent poor adhesion.)

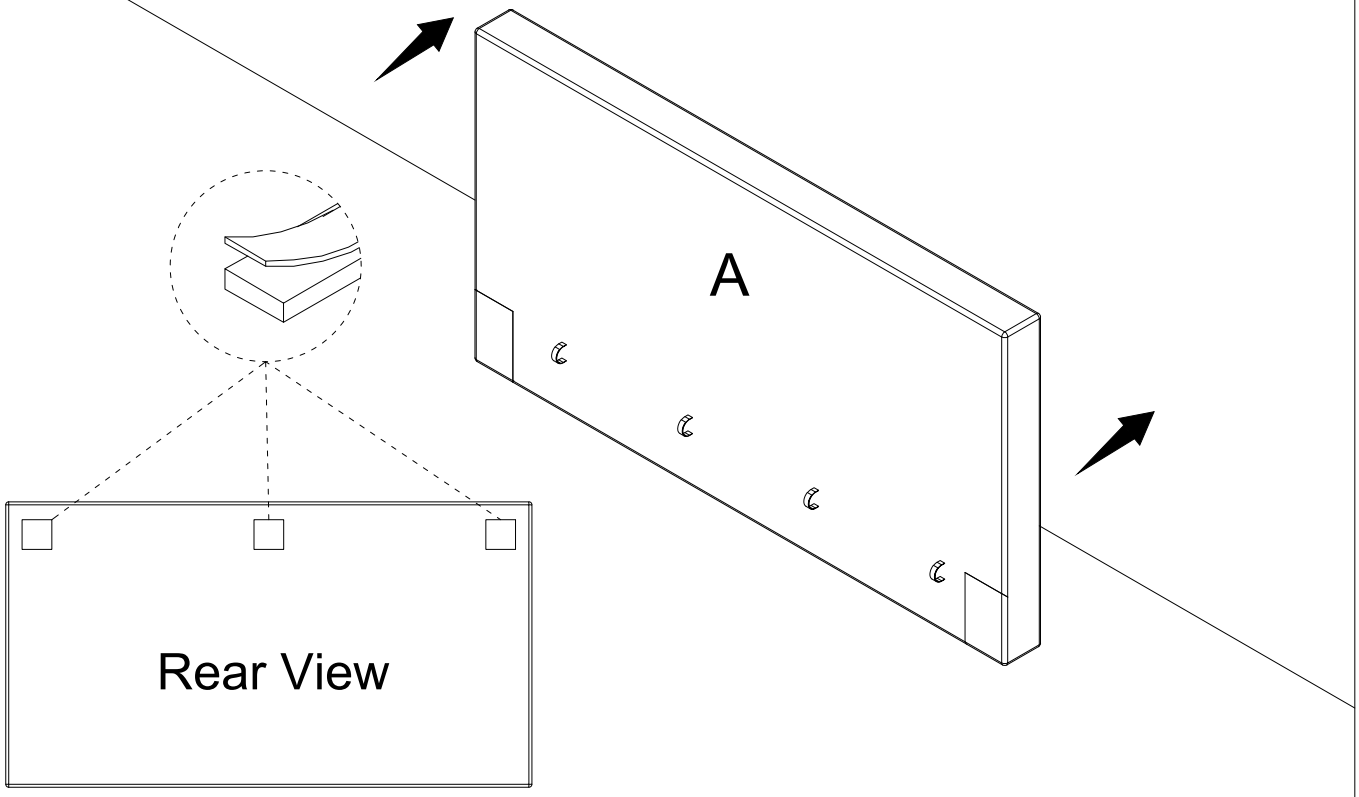

10

Note that the Velcro on the headboard is covered with a protective fabric; remove the fabric before attaching the headboard to the bed frame.

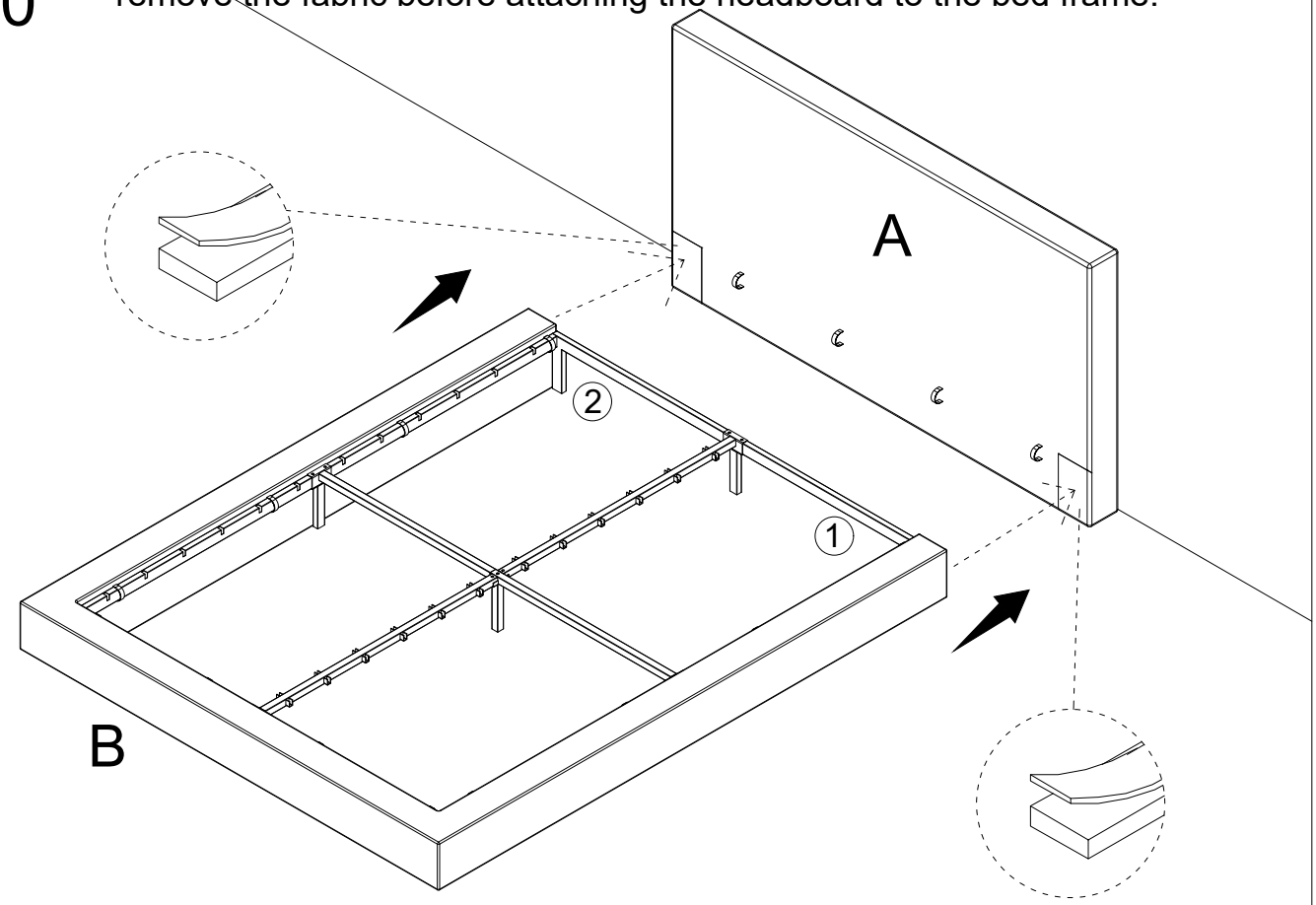

11

Velcro Installation

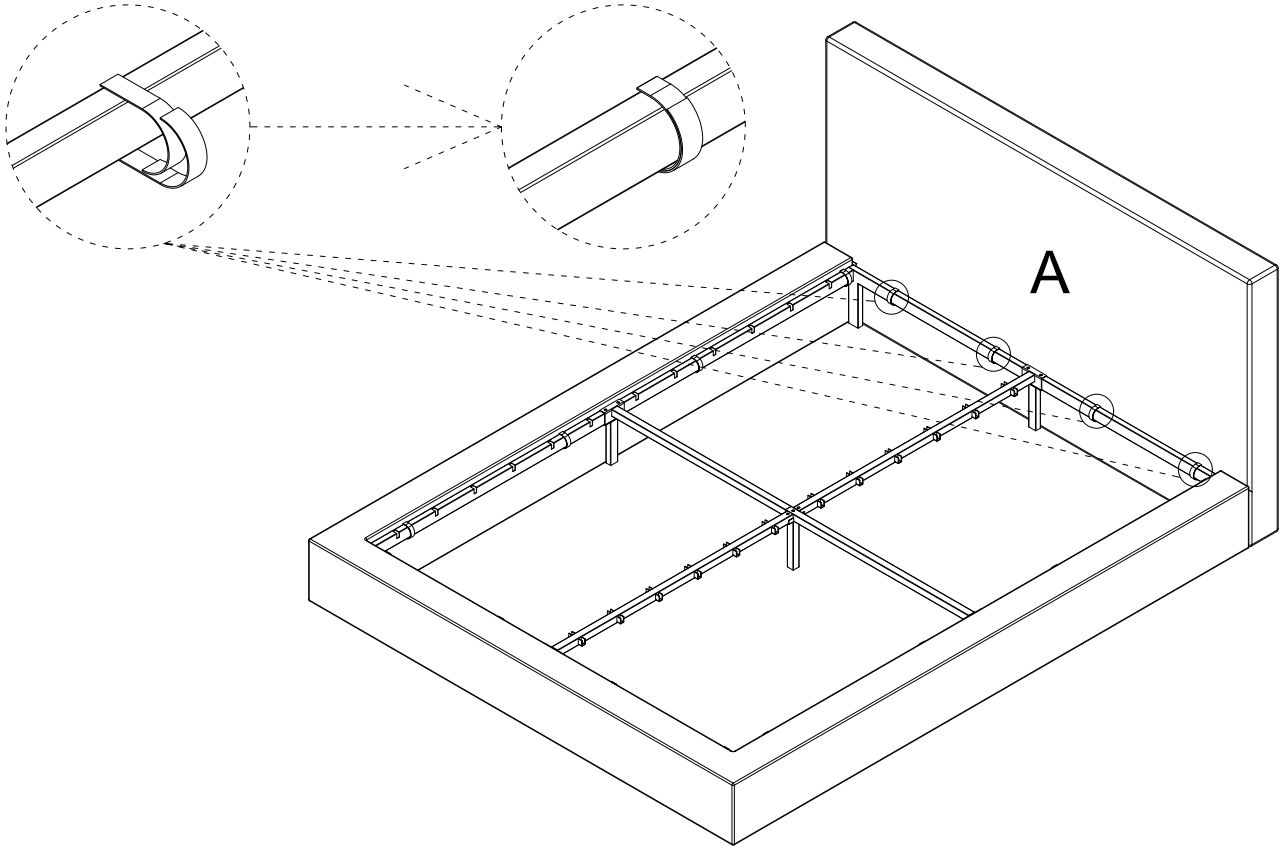

12

Note that the assembled Part 11 is only inserted into Component B and shall not be connected to the bed frame.(Note: After installation, the wooden boards on both sides shall face the outer side of the bed frame instead of the inner side, as shown in the figure.)

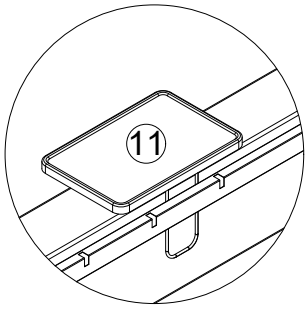

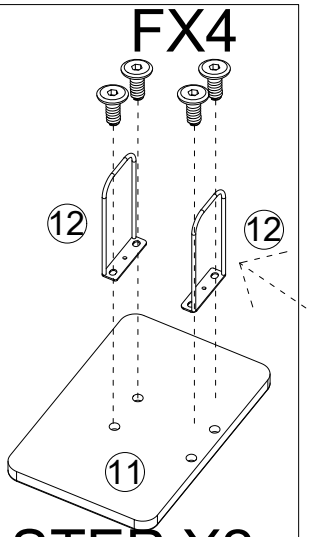

Caution: Install Part 12 – metal wires face outward (both sides), leave middle space for Component B connection.

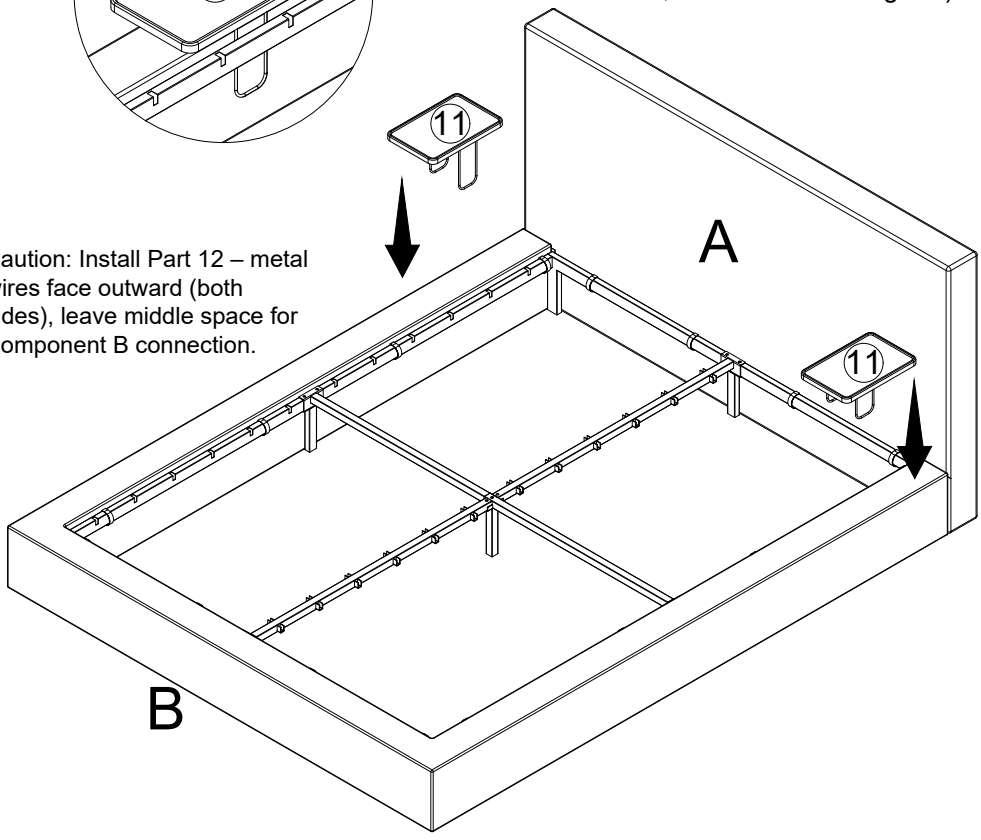

STEP X2

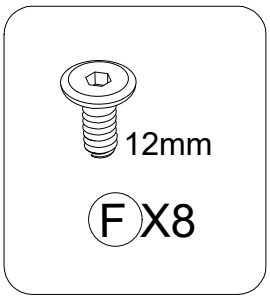

13

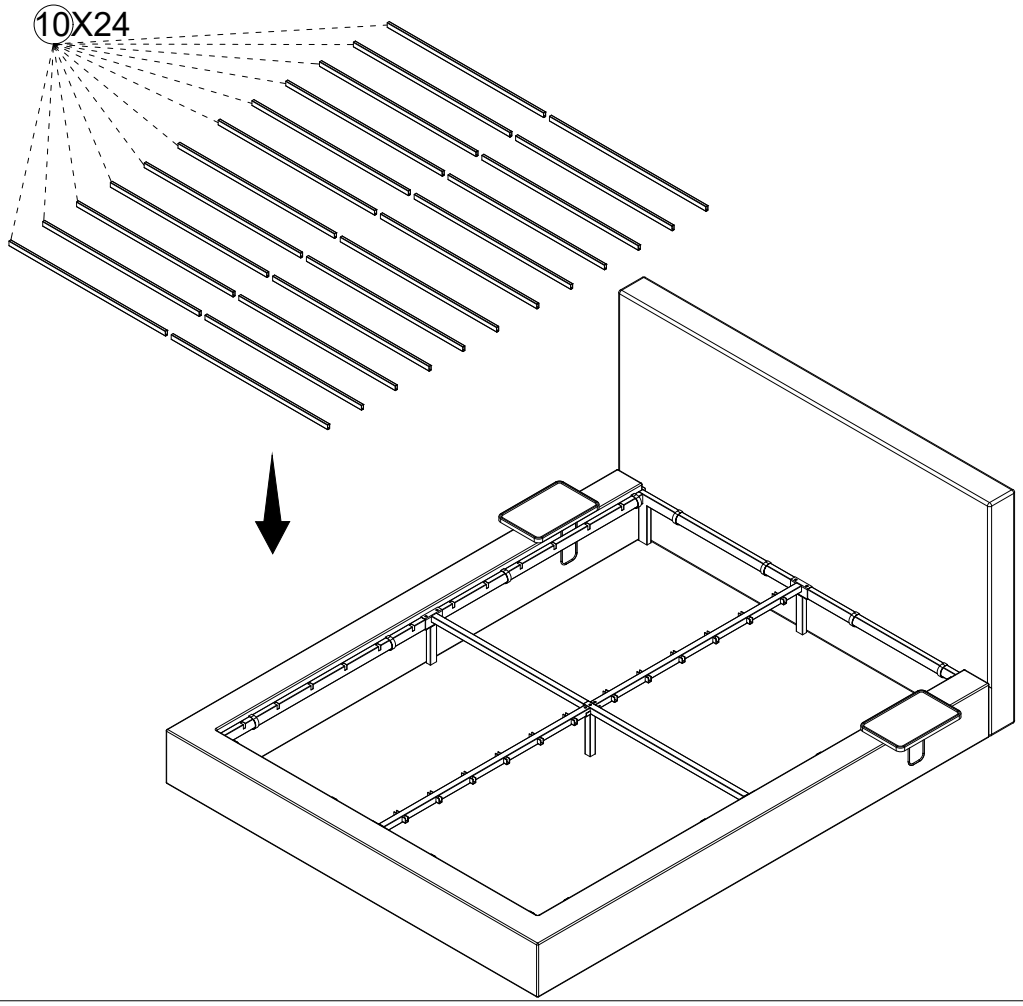

14
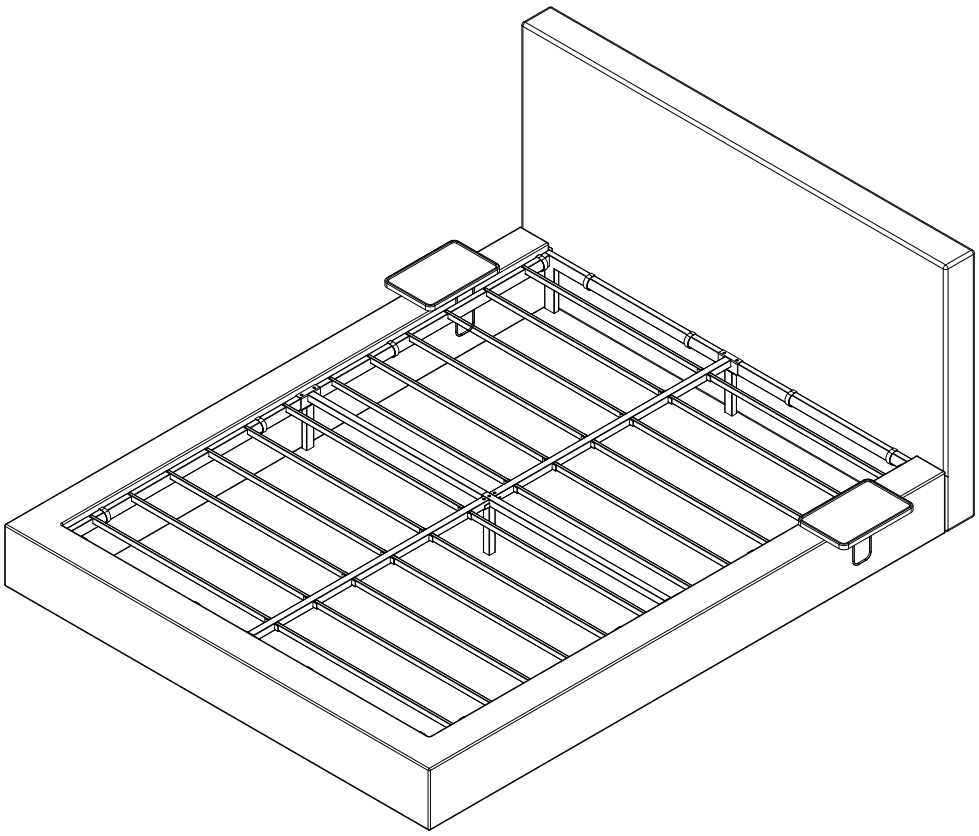
Complete Assembly