Assembly Guide

If you're having any difficulty during assembly of this product, don't hesitate to call us

Our customer service experts are trained to provide step-by-step instruction and can easily replace any missing or damaged parts.

60W Hutch

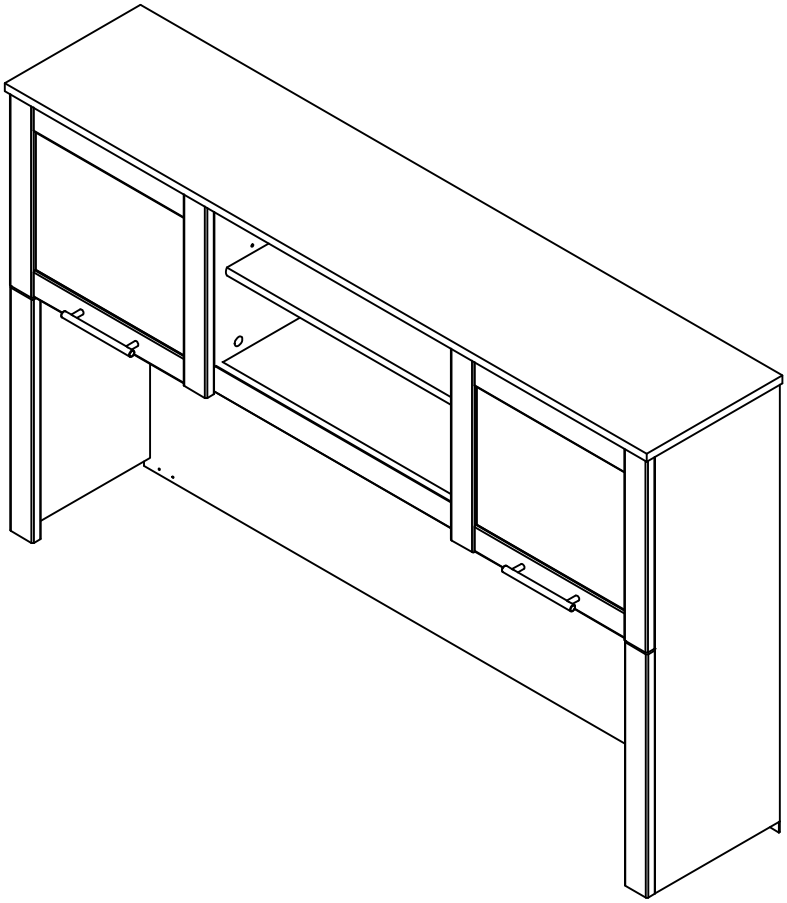

Keep manual for future reference.

Get Ready to Assemble

For best results, keep these tips in mind:

1. We know you want to finish this assembly as quickly as possible, but trust us: you'll have a better experience if you take it one step at a time.
2. Give yourself some room to work near where you want the fully assembled product.
3. If your floor isn't carpeted, assemble this product on the empty carton to avoid scratching.
4. Do you have a friend who owes you a favor? Some steps may go a little easier with a second set of hands.

DOs

- Use a #2 Phillips head screwdriver (or other handheld tools as indicated)
- Wear safety glasses at all times during assembly
- Carefully follow the instructions in this guide and complete all steps in order
- Give us a call if you're having trouble with a particularly tricky step

DON'Ts

- We know power tools are quick and easy, but you shouldn't use them when assembling this product (unless otherwise specified)
- Never move your furniture with items inside or resting on the surface
- Do not attempt to use this product before all steps have been completed

PLEASE READ WARNINGS

Improper use can cause safety hazards, or damage to your furniture and household items.

Warning	Do	Don't	Why it's important
Serious injury may occur.	• Assemble following all instructions using all indicated parts and hardware provided. • Attach hutch as described in the instructions. • Verify furniture is stable on it's own.	• Do not move unit when loaded. • Do not load with a television or other heavy equipment. • Do not exceed the maximum load limits stated in the instructions. • Do not allow children to climb, or hang on furniture.	Improper assembly, use or loading can lead to product instability, tip-over or collapse.

Advertencia	Hacer	No	Por qué es importante
Se pueden producir lesiones graves.	• Ensamble siguiendo todas las instrucciones utilizando todas las piezas y ferretería indicados provistos. • Coloque la conejera como se describe en las instrucciones. • Verifique que los muebles sean estables por sí mismos.	• No mueva la unidad cuando esté cargada. • No cargue con un televisor u otro equipo pesado. • No exceda los límites máximos de carga establecidos en las instrucciones. • No permita que los niños se paren, trepen o cuelguen de muebles.	El ensamblaje, uso o carga inadecuados pueden provocar inestabilidad del producto, vuelco o colapso.

Avertissement	Faire	Ne le fais pas	Pourquoi c'est important
Des blessures graves peuvent survenir.	• Assemblez en suivant toutes les instructions en utilisant toutes les pièces et le matériel indiqués fournis. • Fixez la huche comme décrit dans les instructions. • Vérifiez que les meubles sont stables par eux-mêmes.	• Ne déplacez pas l'unité lorsqu'elle est chargée. • Ne chargez pas avec un téléviseur ou un autre équipement lourd. • Ne dépassez pas les limites de charge maximale indiquées dans les instructions. • Ne laissez pas les enfants grimper ou s'accrocher aux meubles.	Un assemblage, une utilisation ou un chargement incorrects peuvent entraîner une instabilité du produit, un renversement ou un effondrement.

Get to know your Boards

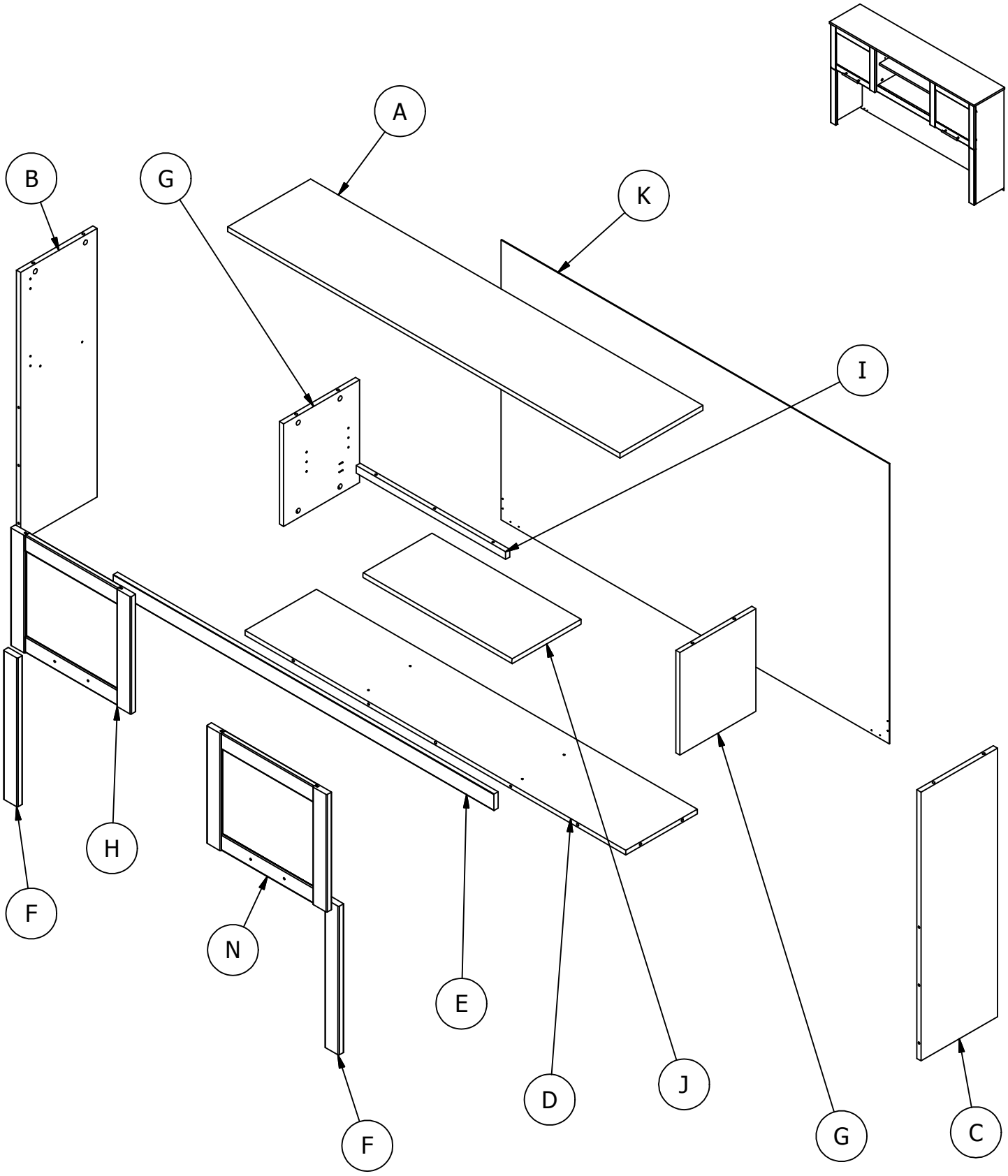

Get to know your Fasteners

Fasteners are shown actual size.

H23480 [4]

#8-32 x 7/8"

H23682 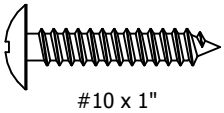 [8]

#10 x 1"

H27771 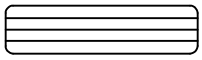 [11]

Wood Dowel 1/4 x 1

H72988 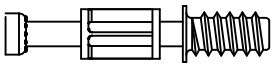 [19]

KD Bolt

H28917 [8]

#6 x 1/2"

H71659 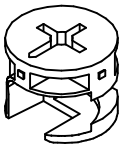 [19]

KD Cam

Q85389 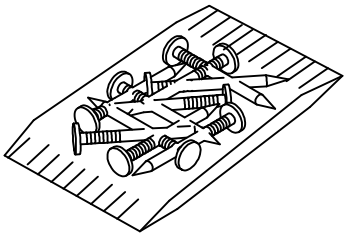 [2]

Nail Bag (20)

Get to know your Hardware

Hardware not to scale.

H85966 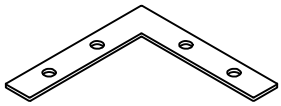 [2]

Bracket

H150001 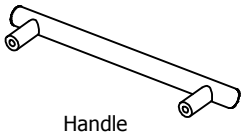 [2]

Handle

H23604 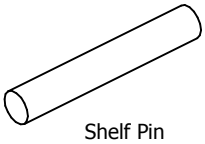 [4]

Shelf Pin

H27145

[1]

H126396 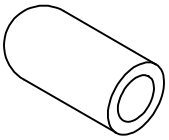 [4]

Shelf Pin Sleeve

H77351 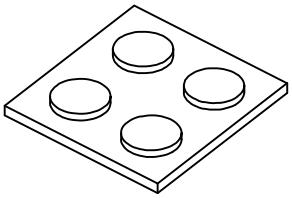 [1]

Bumper (4) per pack

H126359 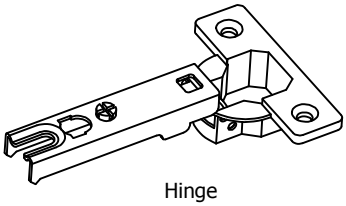 [4]

Hinge

H126364 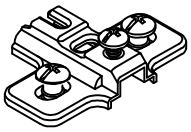 [4]

Mounting Plate

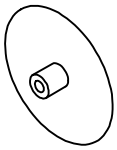 [16]

Cover Cap

STEP 1 Assemble Door

H126359 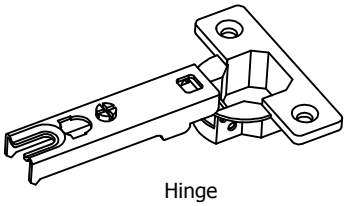 [4]

Hinge

H150001 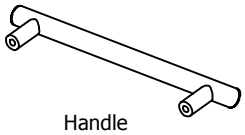 [2]

Handle

H28917 [8]

#6 x 1/2"

H23480 [4]

#8-32 x 7/8"

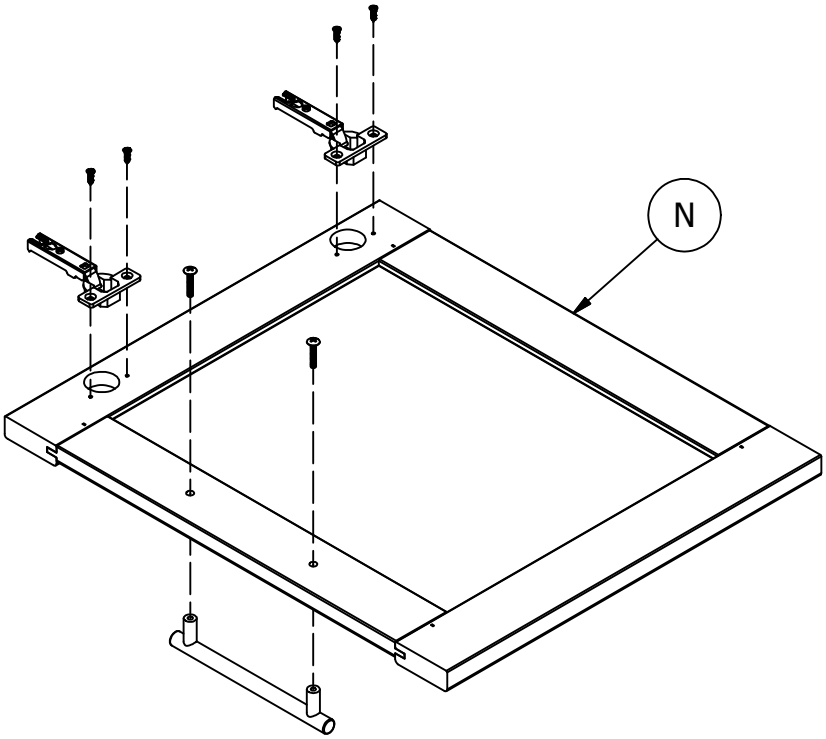

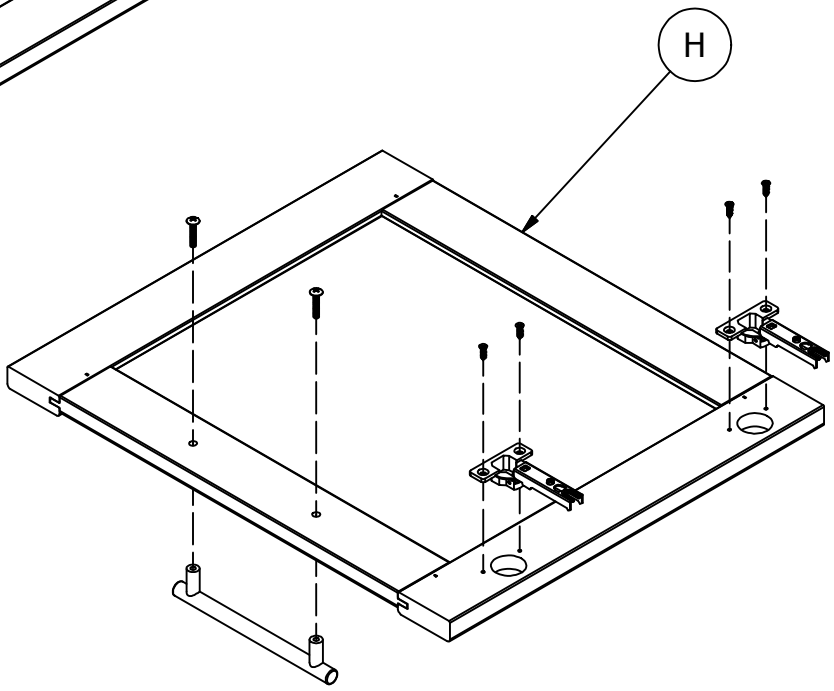

STEP 2 Prepare Panels

H72988 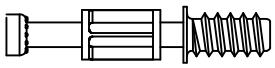 [4]

KD Bolt

H126364 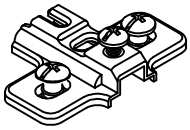 [4]

Mounting Plate

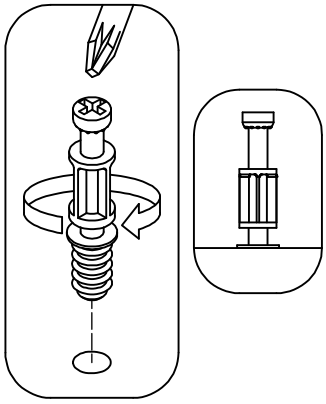

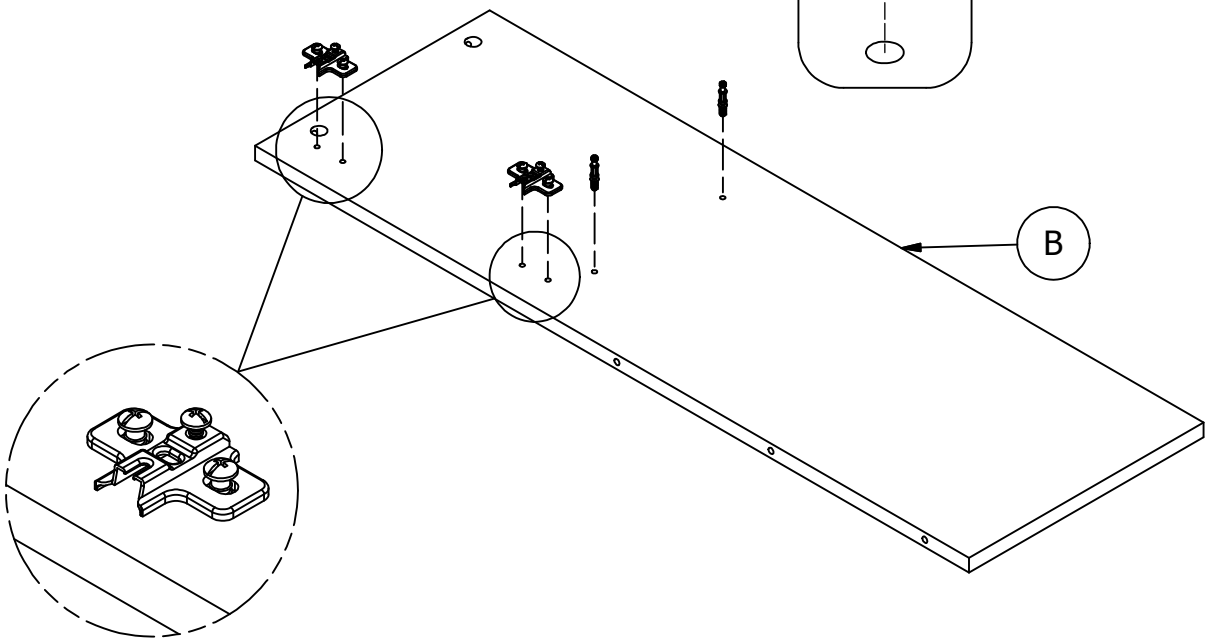

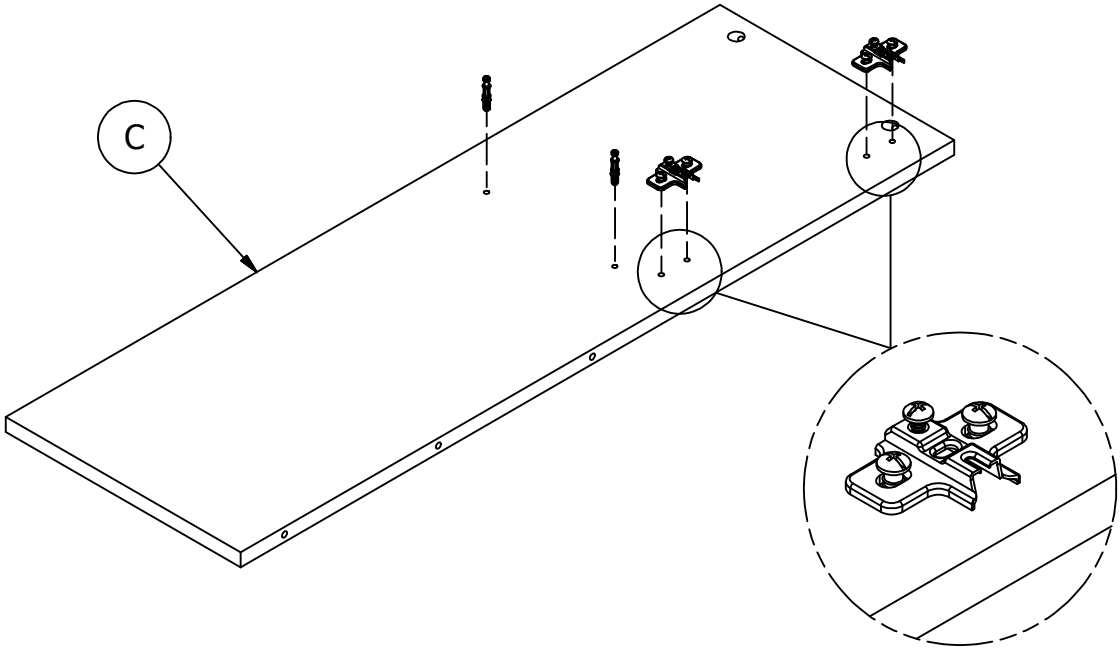

STEP 3 Prepare Panel

H72988 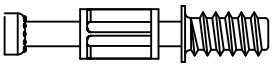 [4]

KD Bolt

H27771 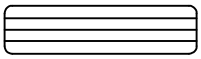 [2]

Wood Dowel 1/4 x 1

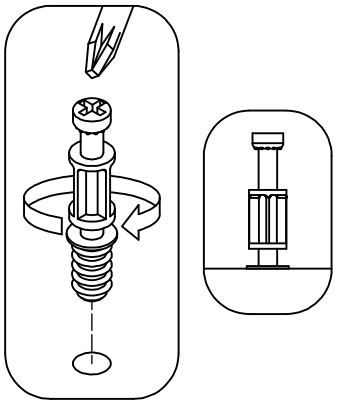

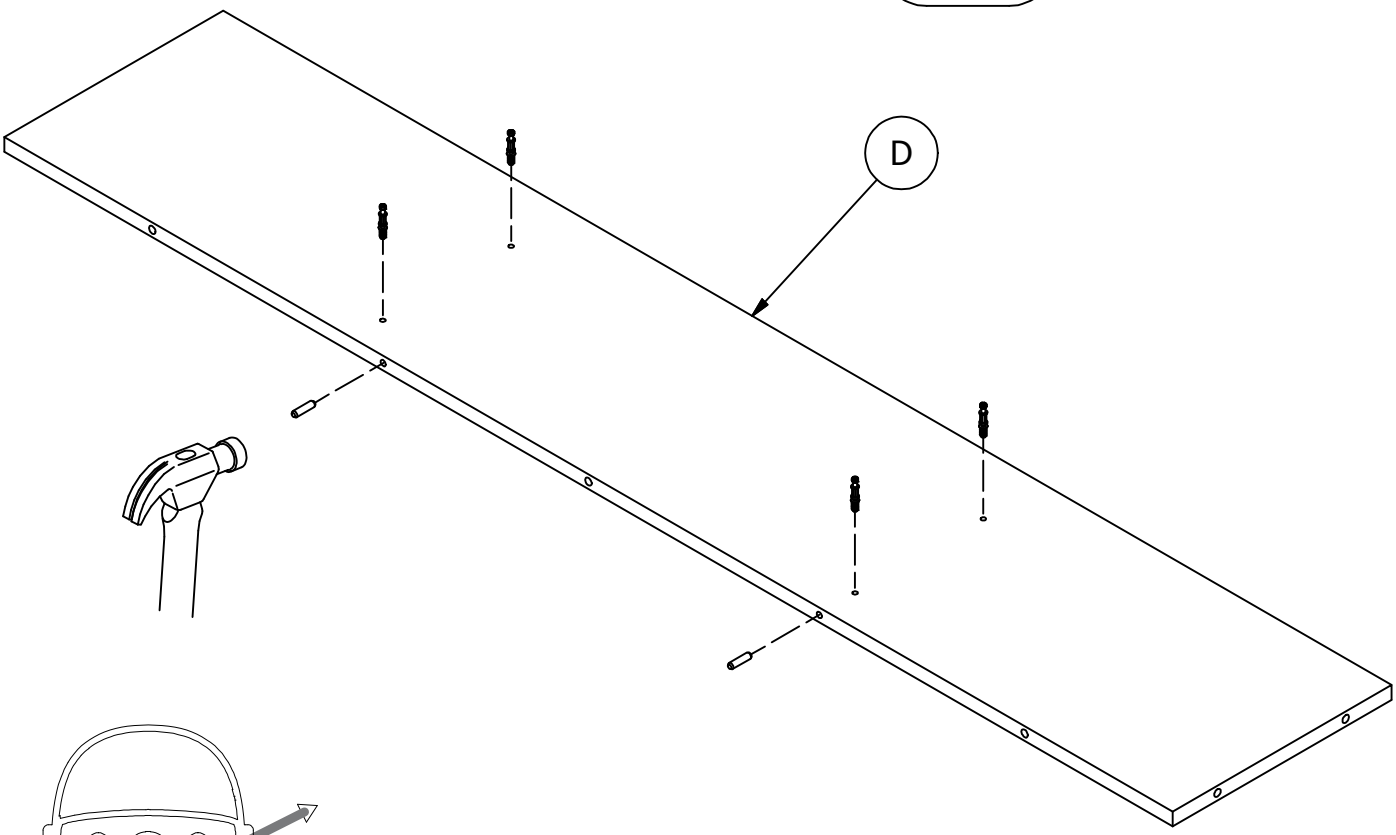

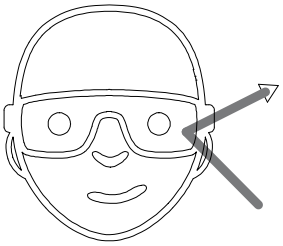

Safety glasses
Gafas de seguridad
Lunettes de protection

STEP 4 Assemble Panel

H71659 [2]

KD Cam

[2]

KD Cams

Cover Cap

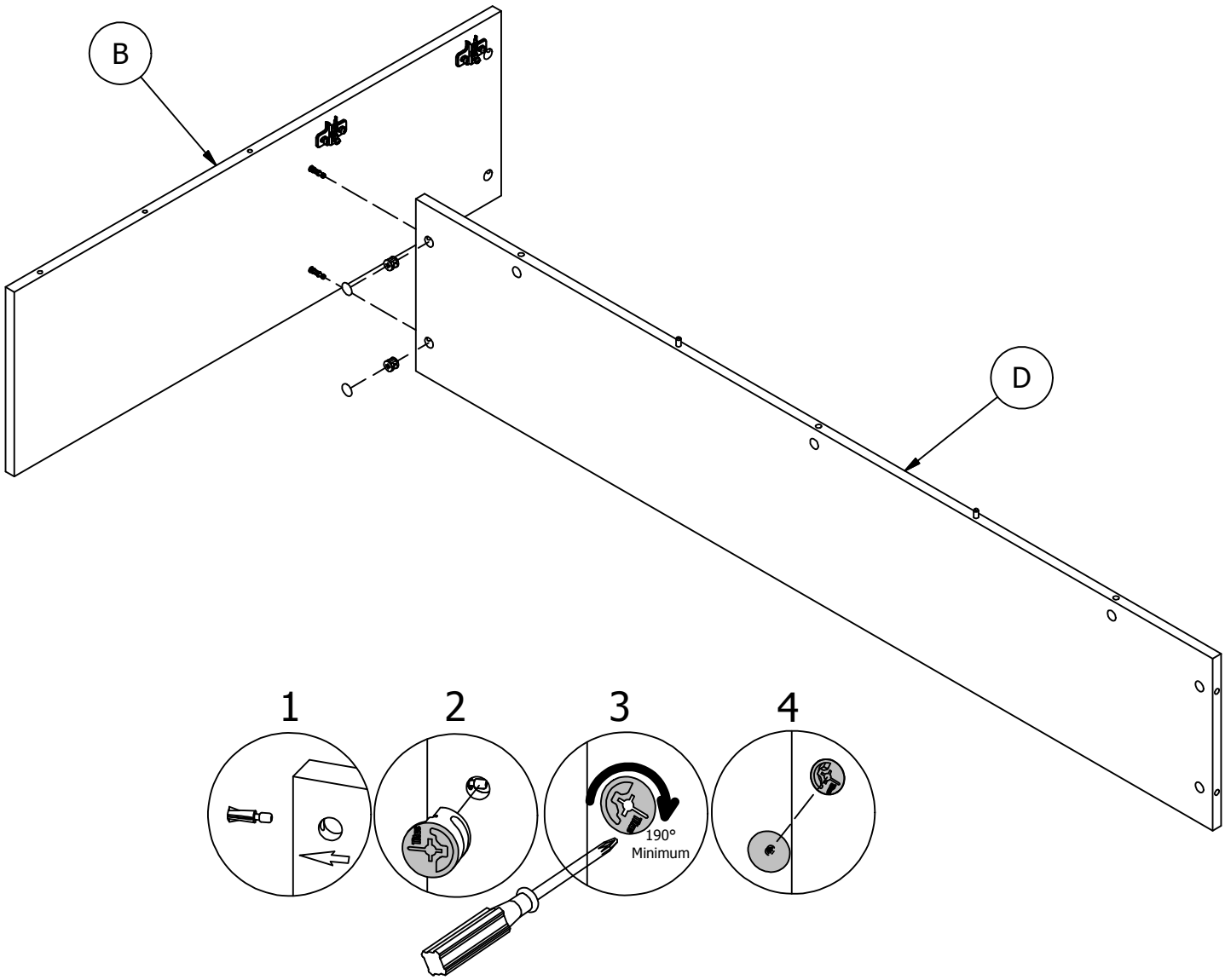

STEP 5 Assemble Panel

H71659 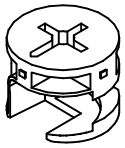 [2]

KD Cam

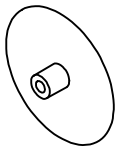 [2]

Cover Cap

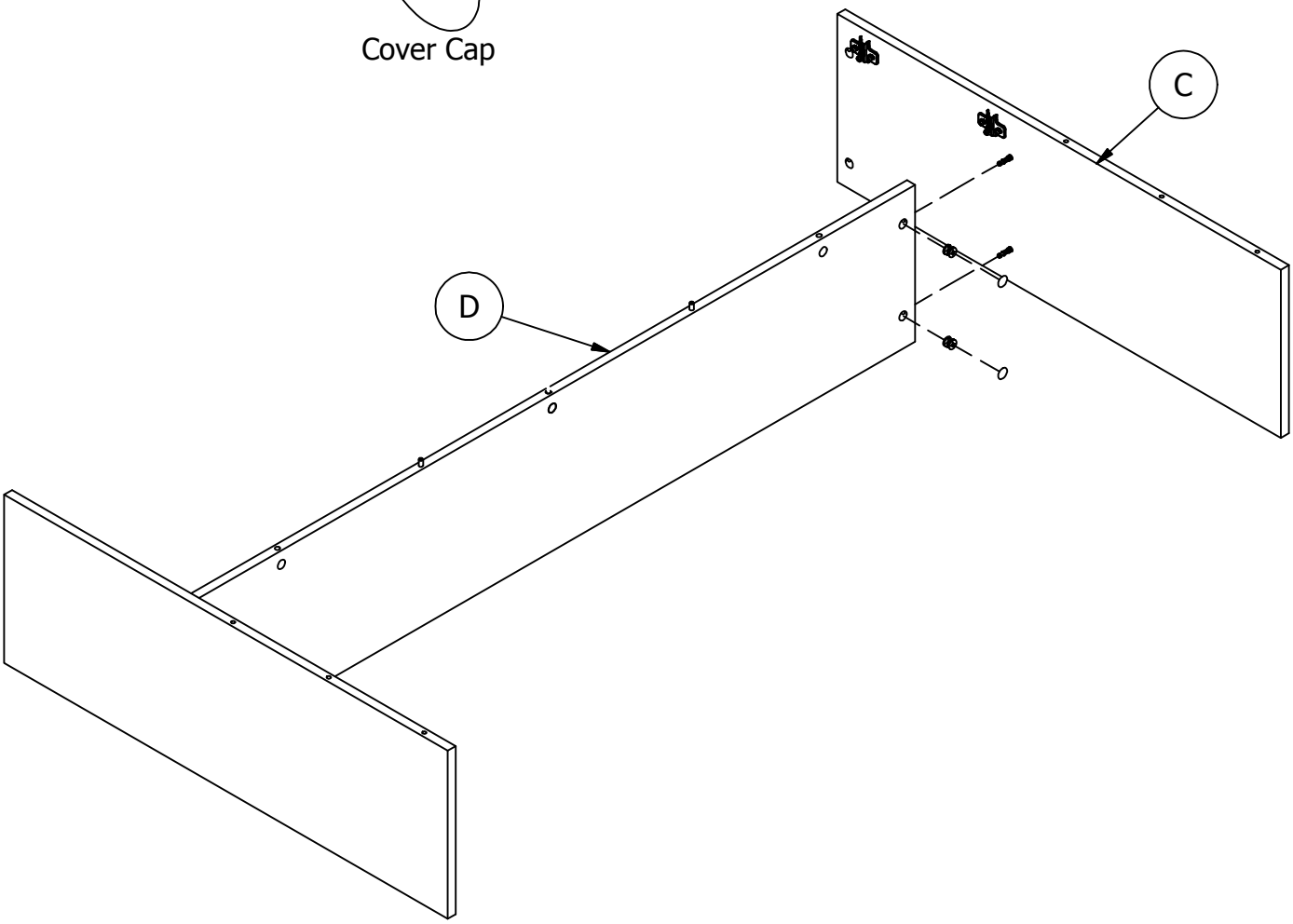

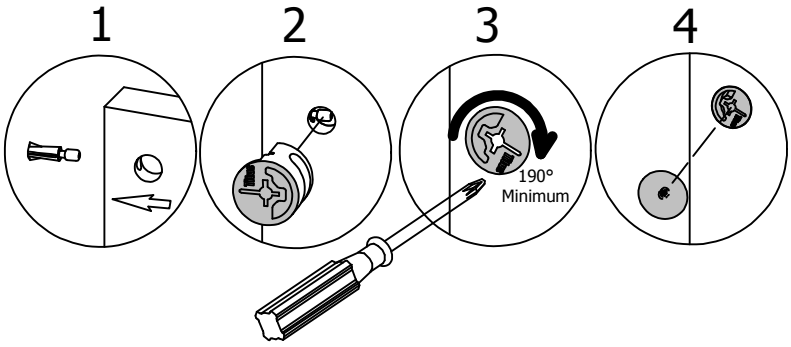

STEP 6 Assemble Panels

H71659 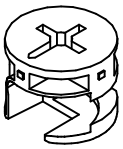 [4]

KD Cam

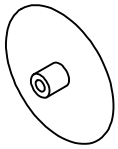 [4]

Cover Cap

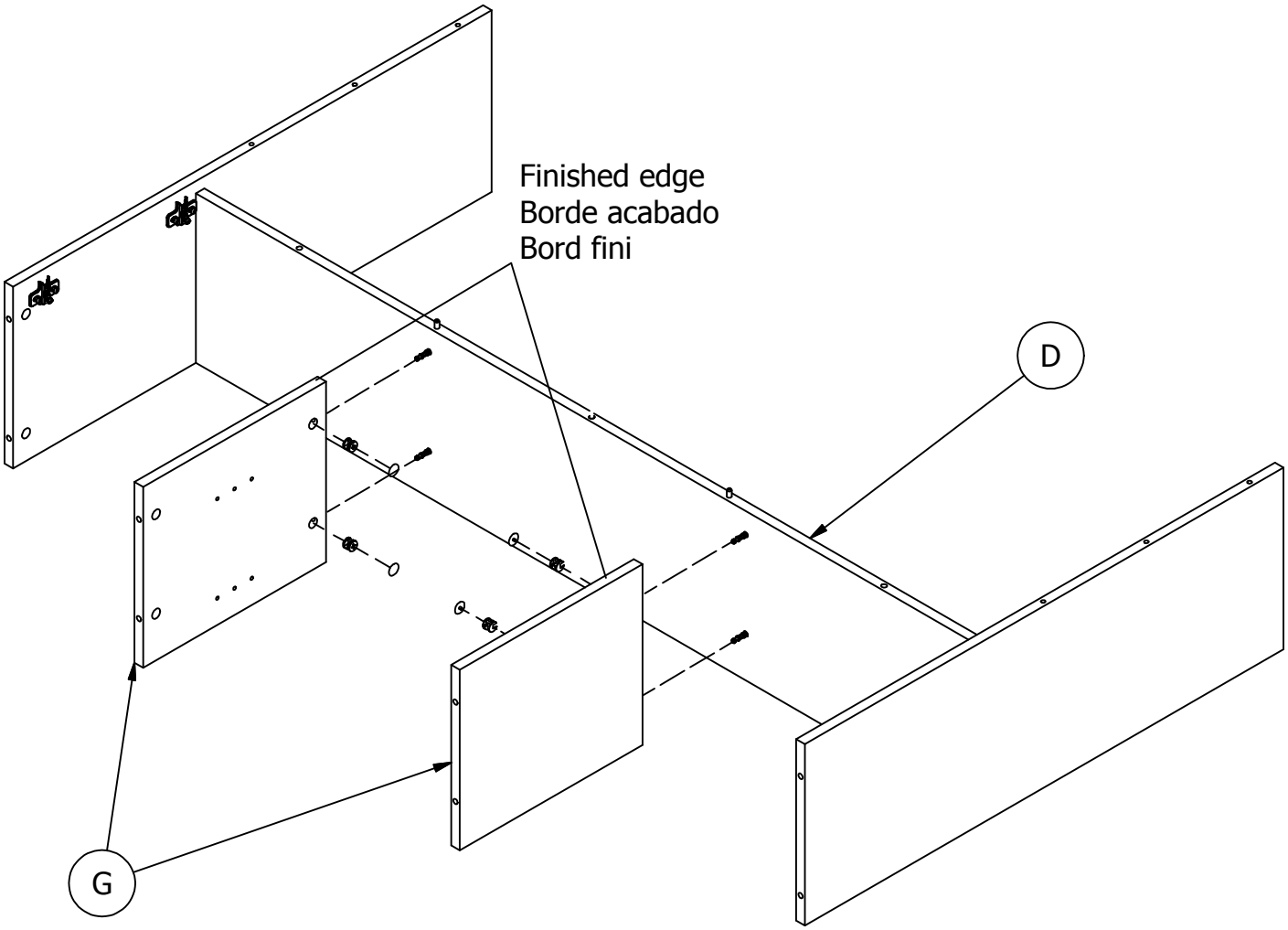

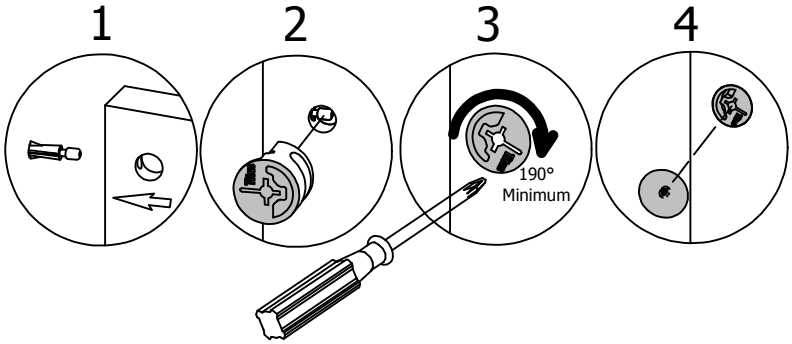

STEP 7 Prepare Top

H72988 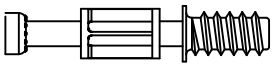 [8]

KD Bolt

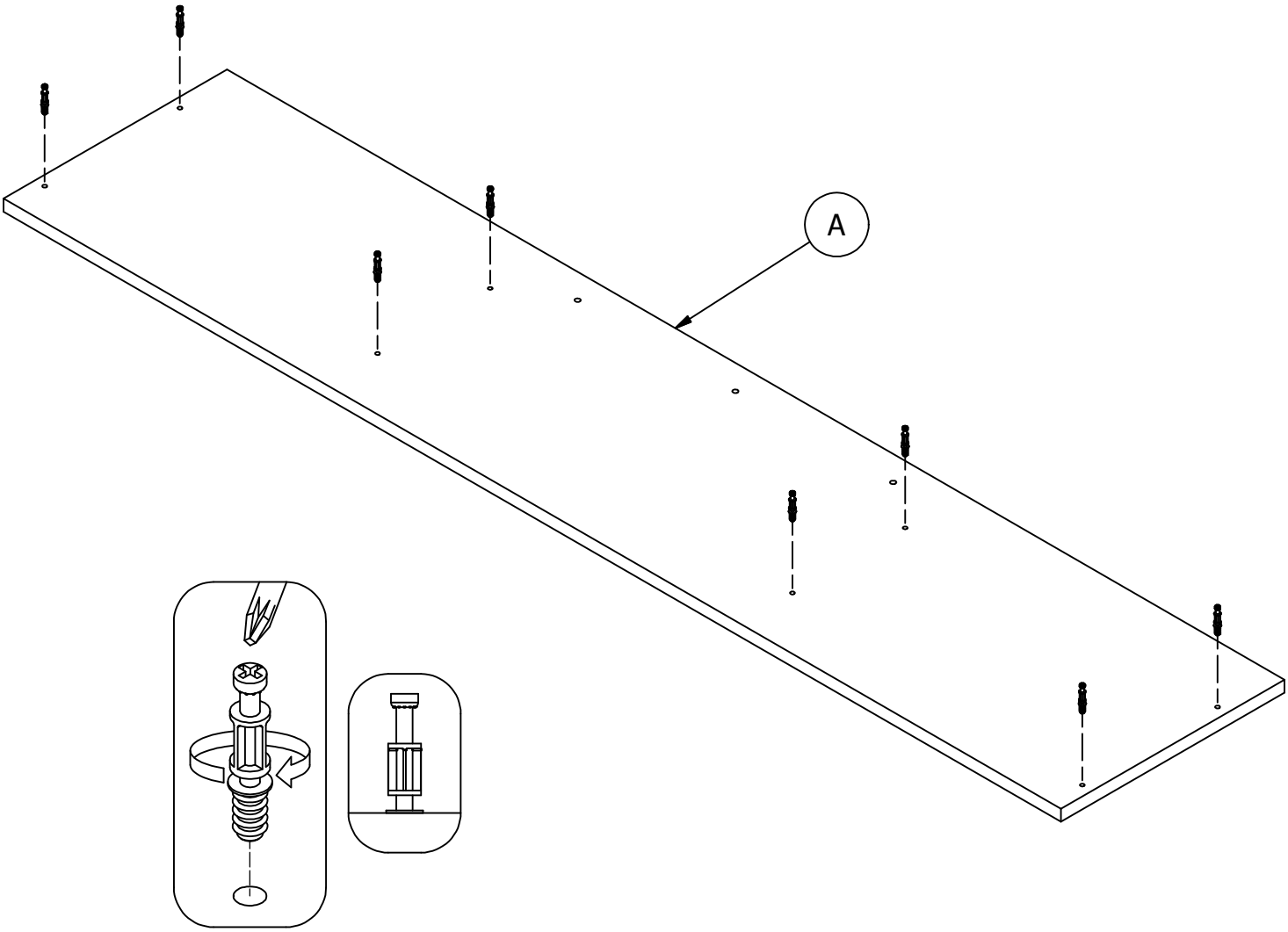

STEP 8 Attach Rail

H27771 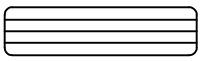 [3]

Wood Dowel 1/4 x 1

H27145

[1]

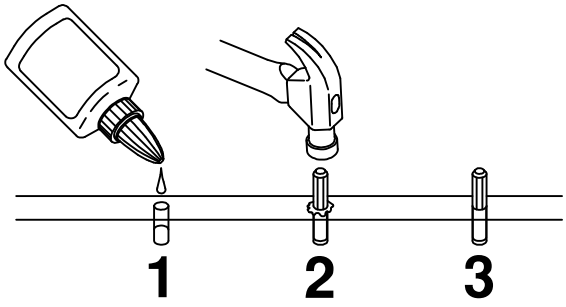

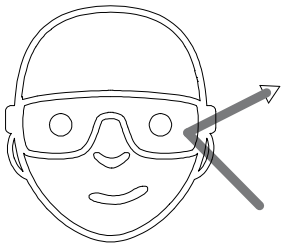

Safety glasses
Gafas de seguridad
Lunettes de protection

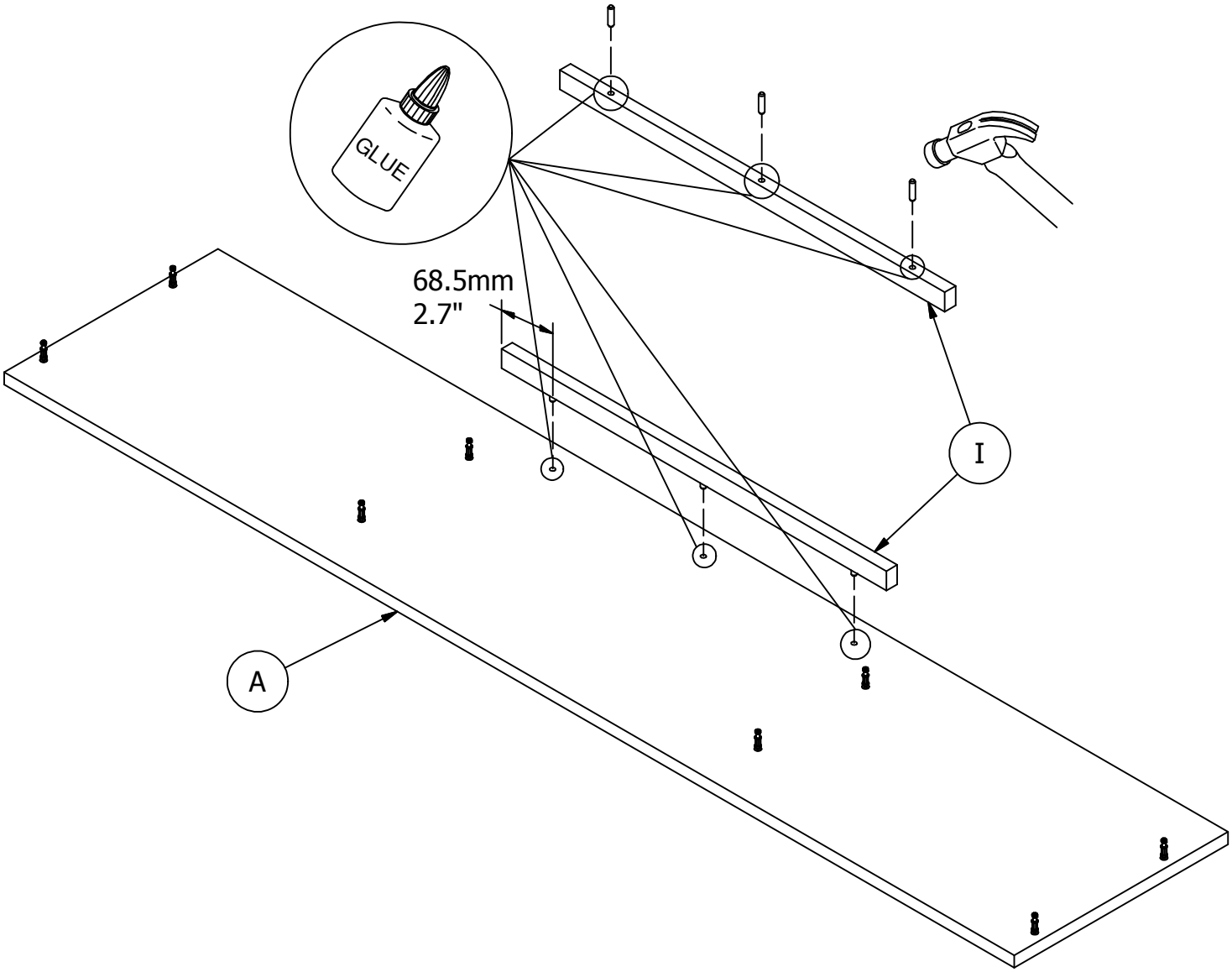

STEP 9 Attach Top

H71659 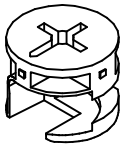 [8]

KD Cam

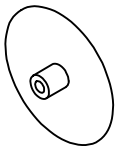 [8]

Cover Cap

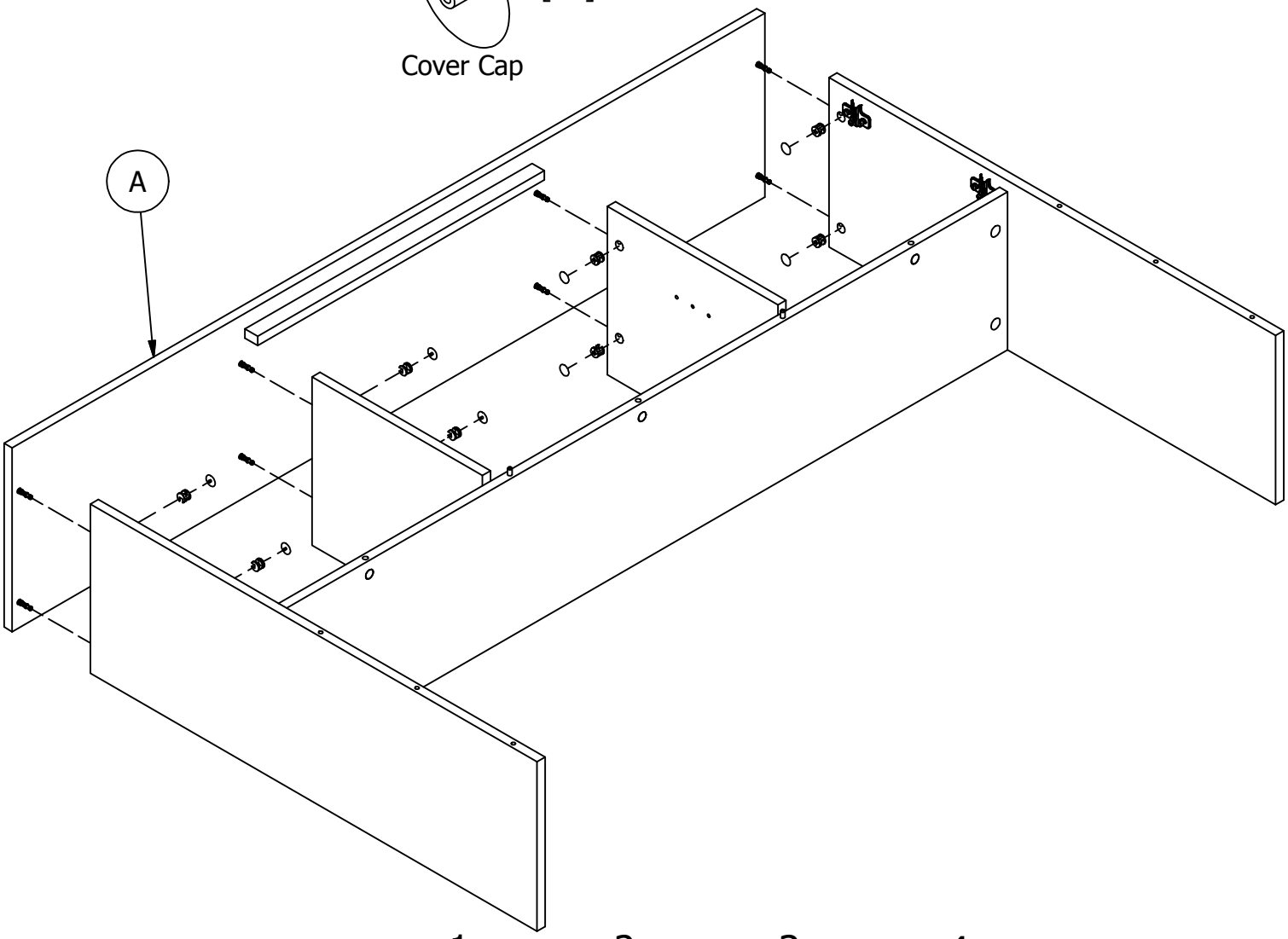

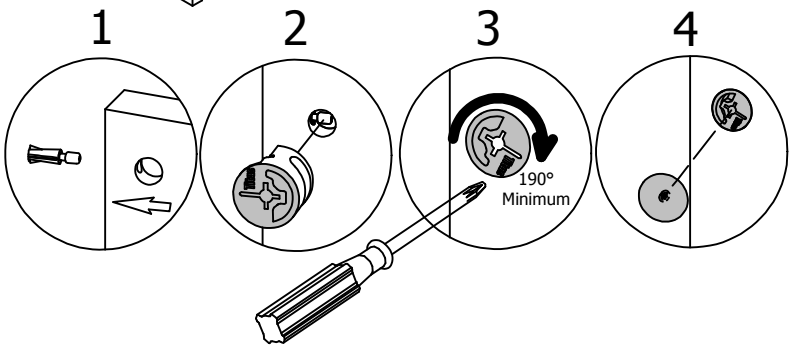

STEP 10 Assemble Rail

H72988 [3]

KD Bolt

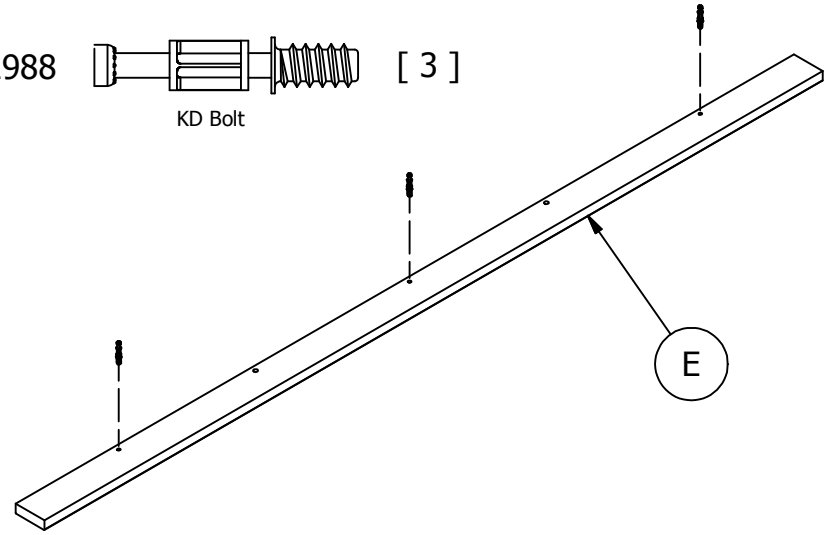

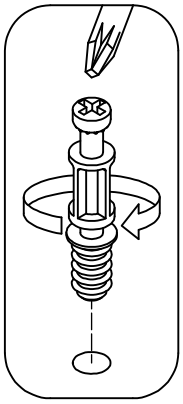

H71659 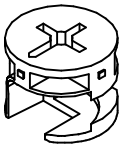 [3]

KD Cam

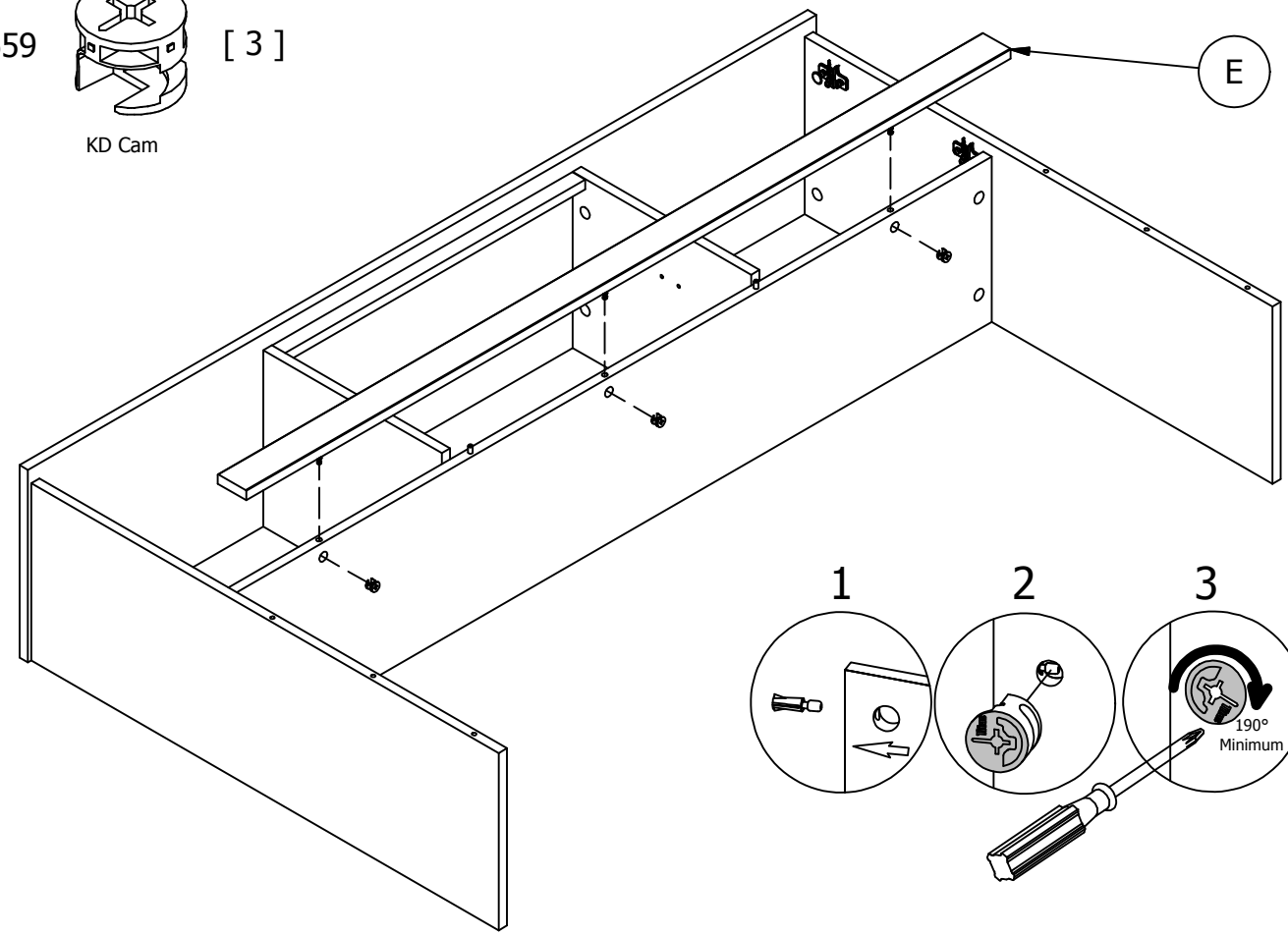

STEP 11 Attach Back Panel

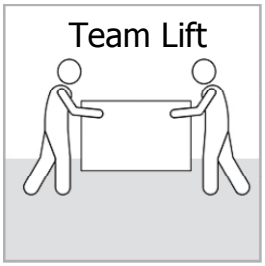

Q85389 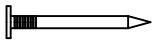 [30]

Nail 19mm

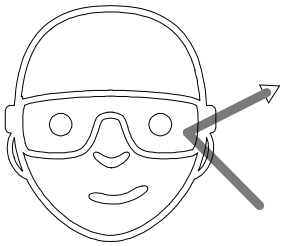

Safety glasses
Gafas de seguridad
Lunettes de protection

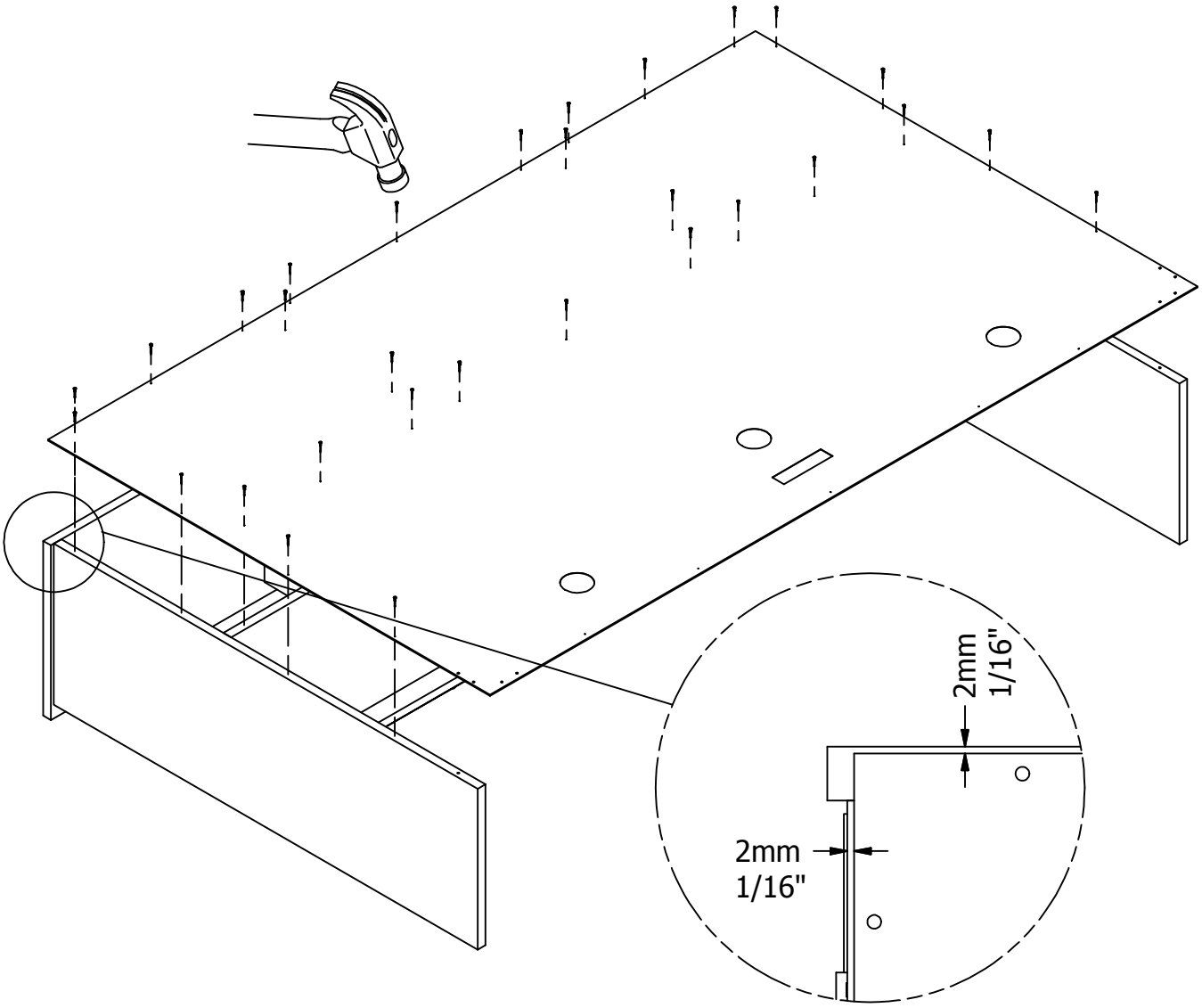

STEP 12 Assemble Rail

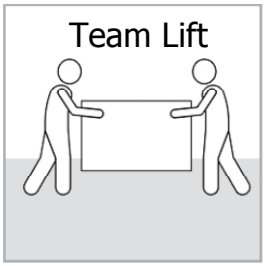

H27771 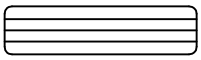 [6]
Wood Dowel 1/4 x 1

H27145

[1]

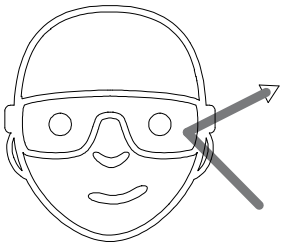

Safety glasses
Gafas de seguridad
Lunettes de protection

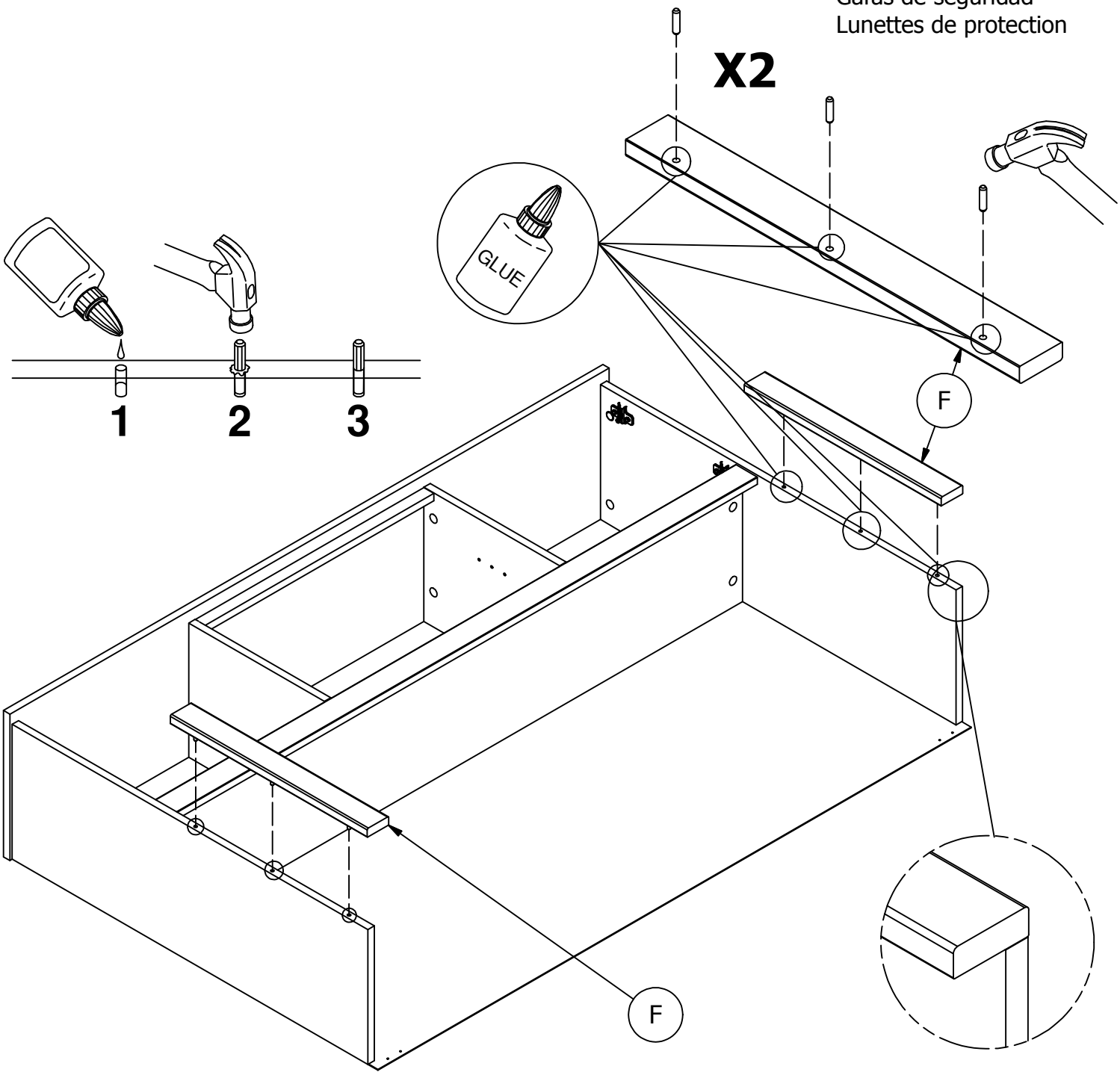

STEP 13 Attach Doors

H77351 [4]

Bumper

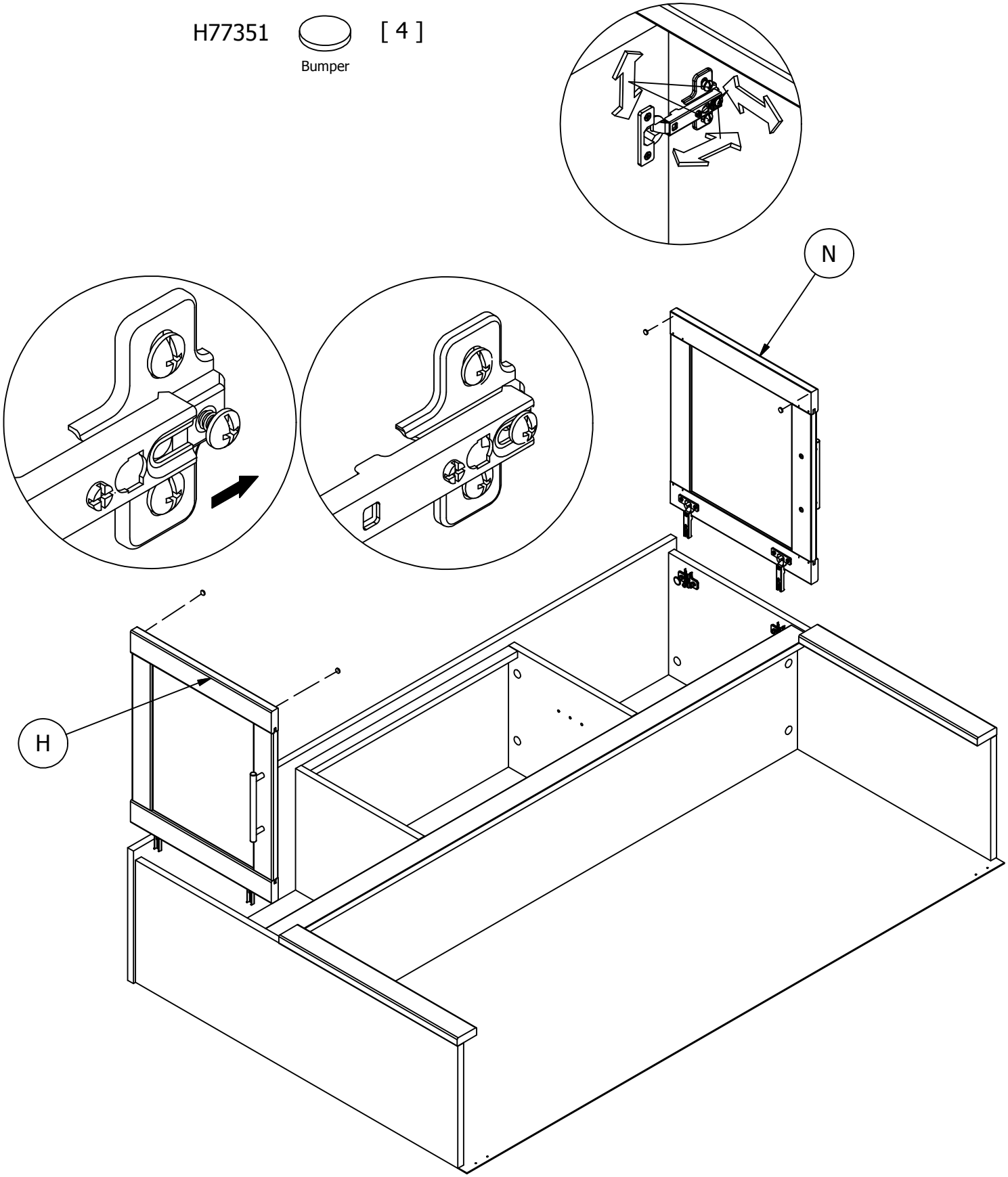

STEP 14 Attach Hutch

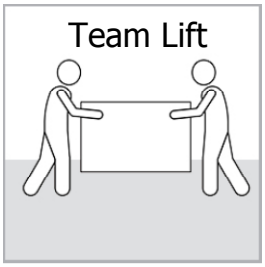

H23682 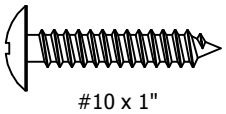 [8]
#10 x 1"

Q85389 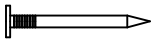 [5]
Nail 19mm

H85966 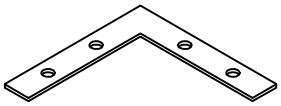 [2]
Bracket

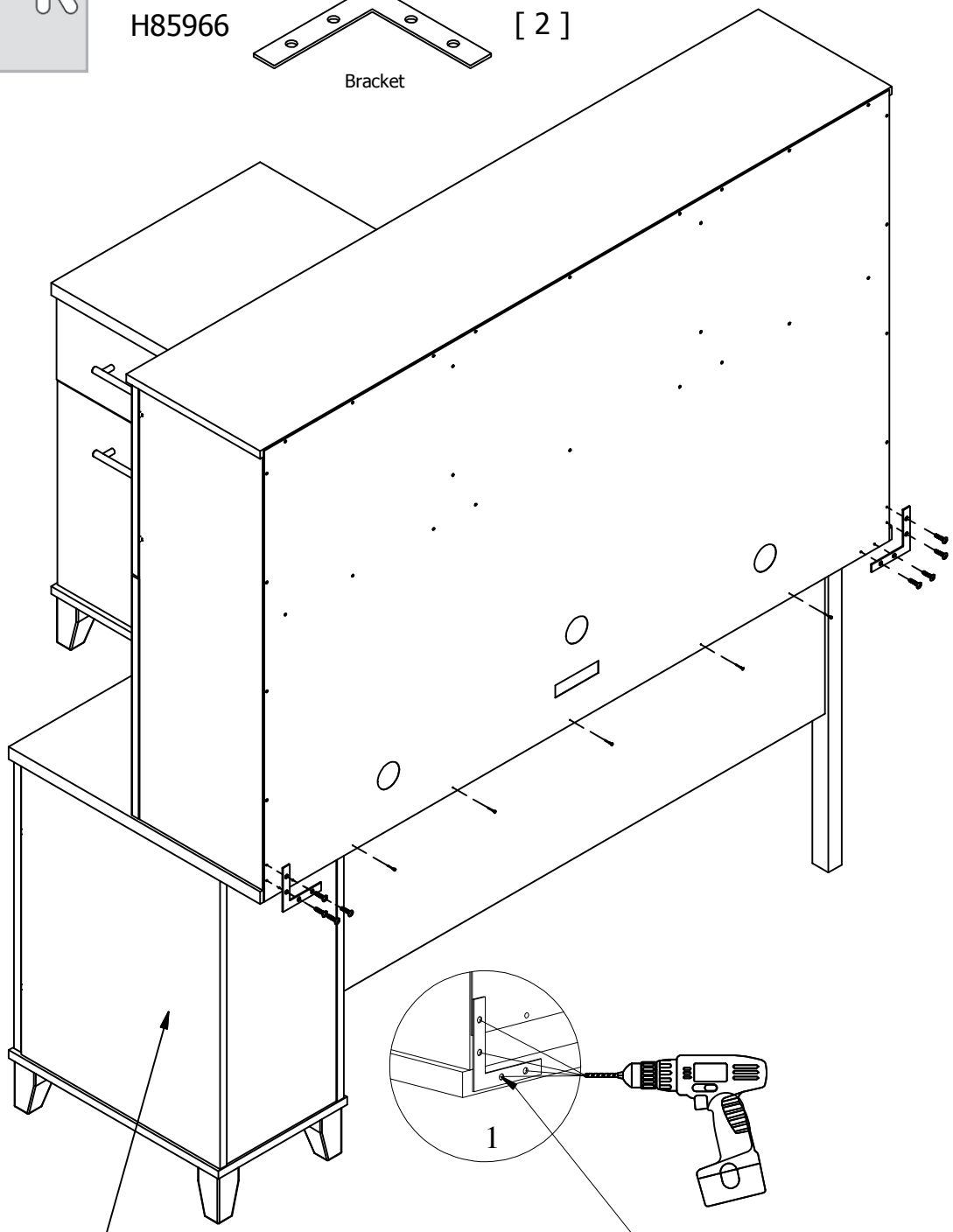

WC81430
WC81530
WC81630
WC81730
WC81830

Drill (8) 1/8" holes 3/4" deep.
Perfore (8) agujeros de 3mm a 19mm de profundido.
Percer (8) trous de 3mm de diamètre et 19mm de profondeur.

STEP 15 Insert Adjustable Shelf

H23604 [4]

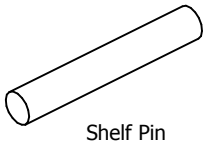

Shelf Pin

H126396 [4]

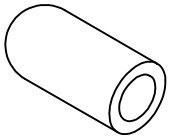

Shelf Pin Sleeve

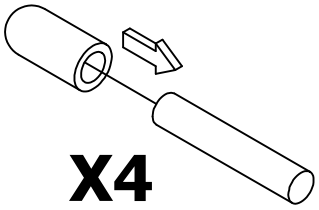

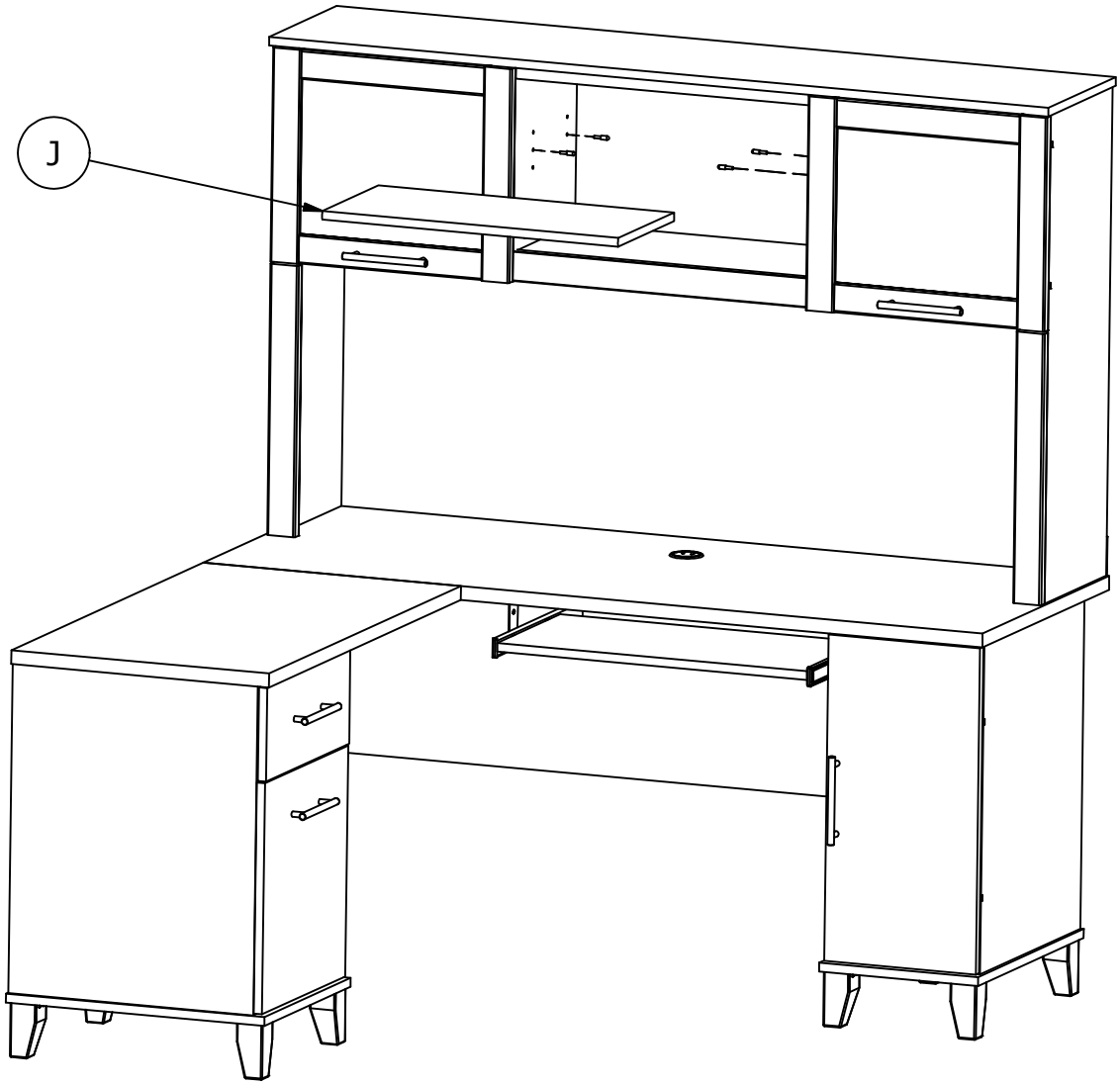

STEP 16 Loading

Gently clean surfaces with a damp sponge eraser.

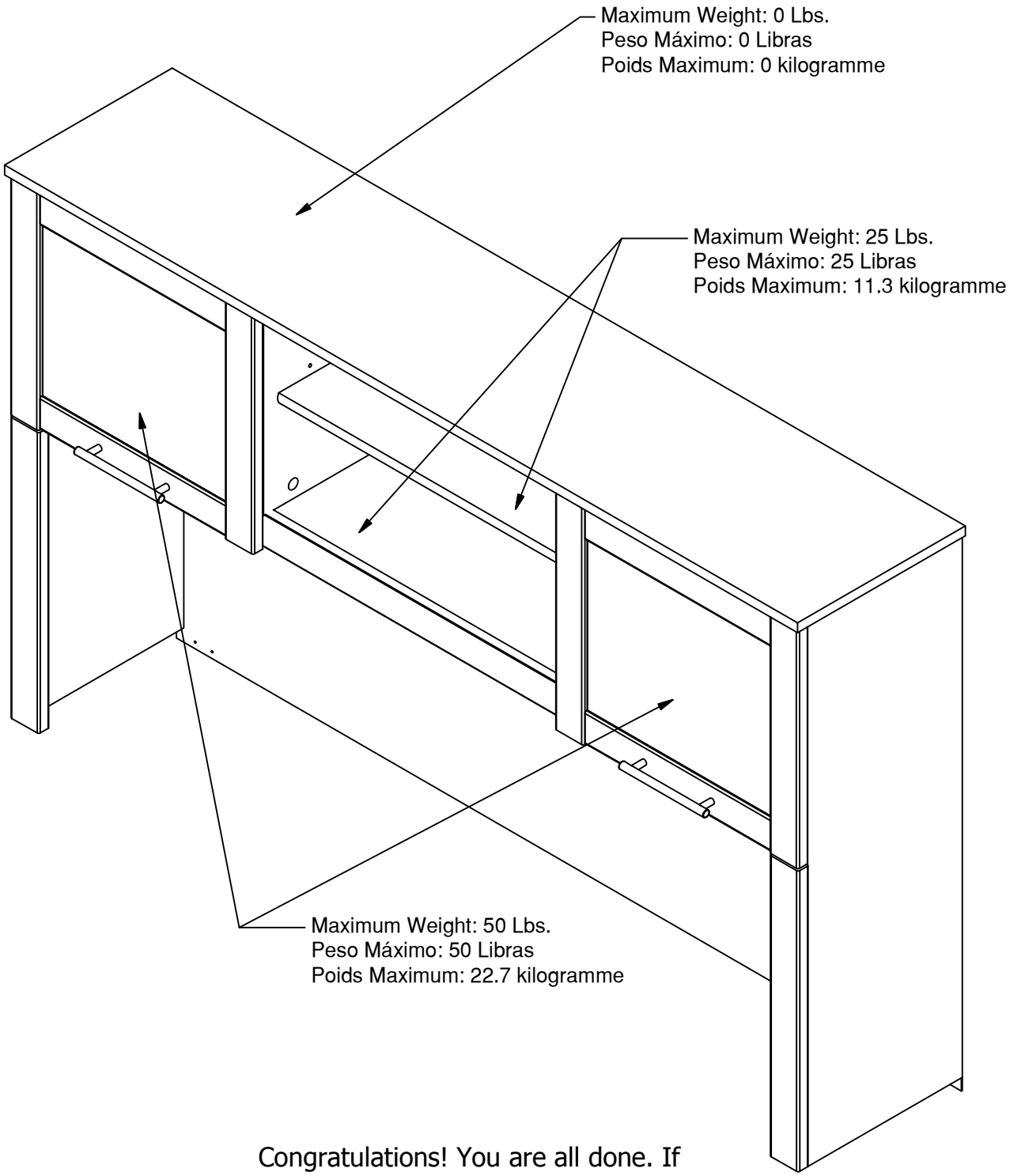

Congratulations! You are all done. If you have any questions or concerns, please call.

PARTS LIST

WC81431

A	[1]	W126802	G	[2]	W126807
B	[1]	W126803	H	[1]	S156277
C	[1]	W126804	I	[1]	W126809
D	[1]	W126805	J	[1]	W126810
E	[1]	W126806	K	[1]	W177869
F	[2]	W103082	N	[1]	S156278

H87676 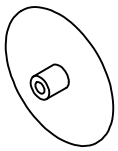 [16]

Cover Cap

WC81531

A	[1]	W193884	G	[2]	W193890
B	[1]	W193885	H	[1]	S193891
C	[1]	W193886	I	[1]	W193892
D	[1]	W193887	J	[1]	W193893
E	[1]	W193888	K	[1]	W193894
F	[2]	W193889	N	[1]	S193895

H92521 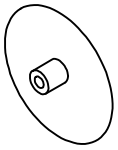 [16]

Cover Cap

WC81631

A	[1]	W189134	G	[2]	W189140
B	[1]	W189135	H	[1]	S189141
C	[1]	W189136	I	[1]	W189142
D	[1]	W189137	J	[1]	W189143
E	[1]	W189138	K	[1]	W189144
F	[2]	W189139	N	[1]	S189145

H83021 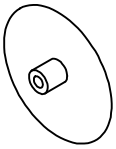 [16]

Cover Cap

WC81731

A	[1]	W145314	G	[2]	W145319
B	[1]	W145315	H	[1]	S156279
C	[1]	W145316	I	[1]	W145320
D	[1]	W145317	J	[1]	W145321
E	[1]	W145318	K	[1]	W177870
F	[2]	W145248	N	[1]	S156280

H95137 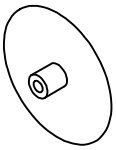 [16]

Cover Cap

WC81831

A	[1]	W177575	G	[2]	W177580
B	[1]	W177576	H	[1]	S177512
C	[1]	W177577	I	[1]	W177581
D	[1]	W177578	J	[1]	W177582
E	[1]	W177579	K	[1]	W177871
F	[2]	W177514	N	[1]	S177513

H73621 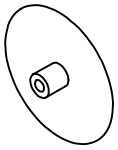 [16]