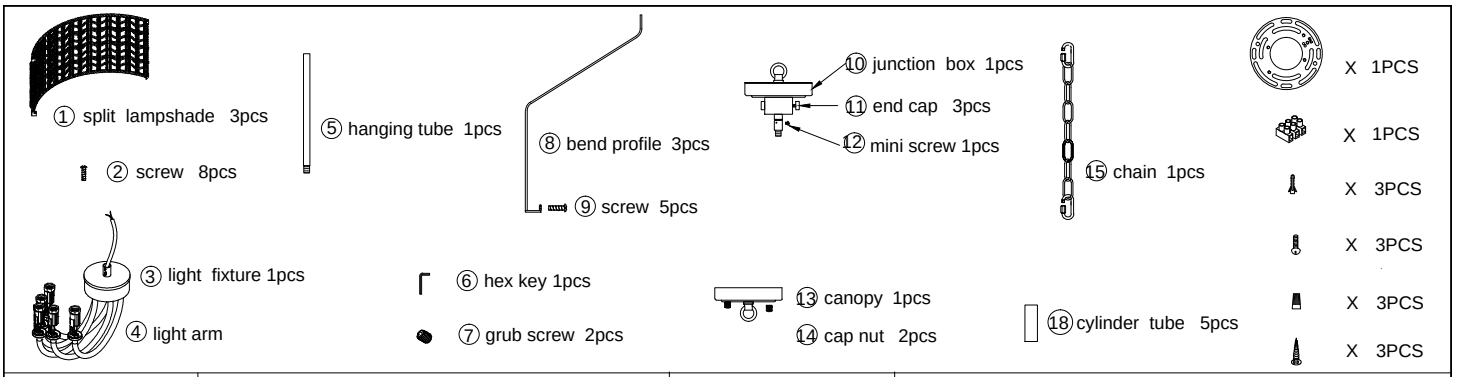

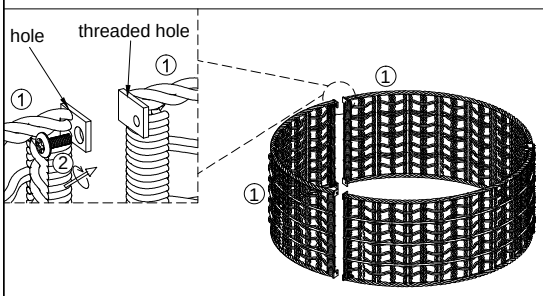

1. Assemble the split parts ① to be a complete lampshade with screw ②. (please don't tighten the screw ② until all screws are ready in the holes , rotate to fasten the screw ② at last)

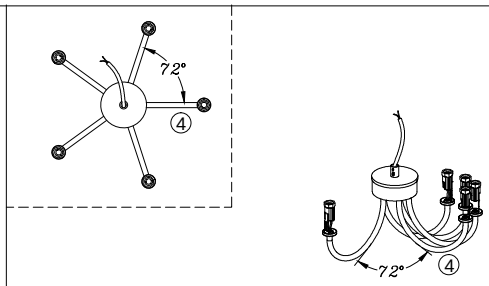

2. Adjust the light arm ④ to suitable position like picture shown.

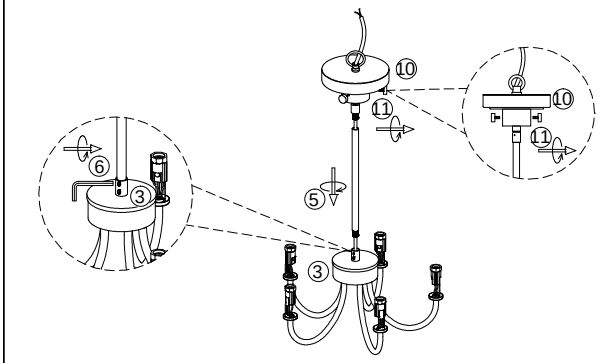

3. Let the wire of the fixture go through the hanging tube ⑤,rotate to install the tube ⑤ to the fixture,fasten it with grub screw ⑦ by rotate hex key ⑥.
4. Let the wire go through the junction box ⑩,rotate to install the box ⑩ to the fixture.
5. Loosen to remove out the end cap ⑪ of junction box ⑩.

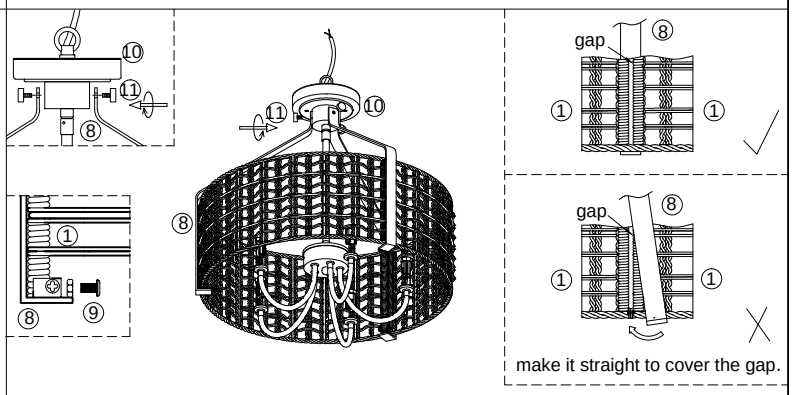

6. Loosen to remove out the screw ⑨ of bend profile ⑧,put the lampshade ① in the profile ⑧.
7. Install the profile ⑧ to the junction box ⑩ with end cap ⑪.
8. Fasten the bend profile ⑧ to the fixture with screw ⑨ (The profile ⑧ should be cover the gap of the lampshade ①,can adjust it by your hand if the profile ⑧ could not cover the gap)

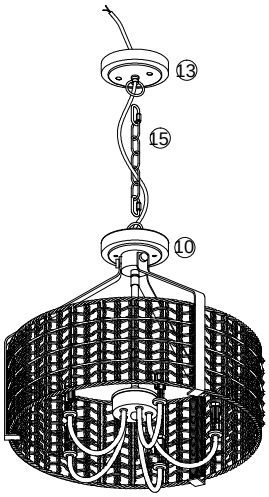

9. Hang the fixture to the canopy ⑬ with chain ⑮,let the wire go through the chain ⑮ and canopy ⑬.

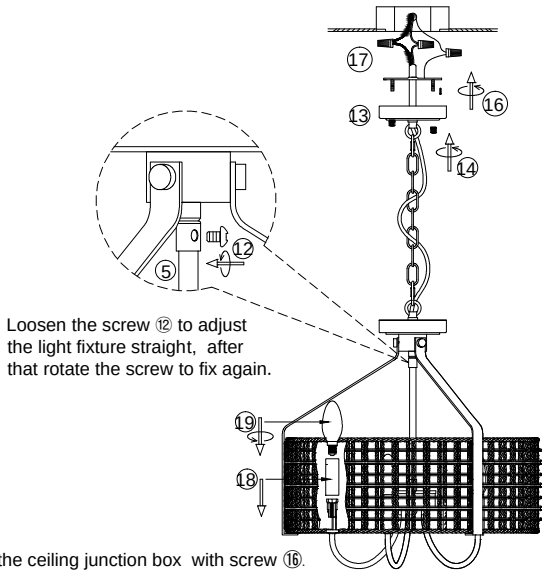

10.Install the bracket to the ceiling junction box with screw ⑯.
11.Connect the wire to your home line with cap connector ⑰.
12.Install the fixture to the bracket with cap nut ⑭.
13.Put the cylinder tube ⑱ on top of bulb holder and install the bulb ⑲.

Please read carefully before installation!!!
Note : Please make sure that the electricity is powered off during installation !
Only a professional electrician should install this kind of product !