FEATURES

- Modern-style slab panels
- Soft-close doors
- 2 soft-close drawers
- Satin lacquer finish
- Finger Pull Panels with 1" reveal
- French cleat mounting design for assisting with installation
- No Decorative Hardware
- Top and faucet not included
- Plumbing rough in area cut-out detailed on page 2
- Made in the US

MATERIAL

- Solid wood, plywood, combination core veneers and medium-density fiberboard.
- Wood is a living material, and its beauty is enhanced by natural variations in grain, color, and pattern. No two pieces of wood are exactly the same, and the color will change with age, temperature, and exposure to light.
- The nature of wood grain can cause variations in stain depth. Our expert craftsmen apply paints and stains in a specific sequence to eliminate these variations.

TECHNICAL DRAWINGS

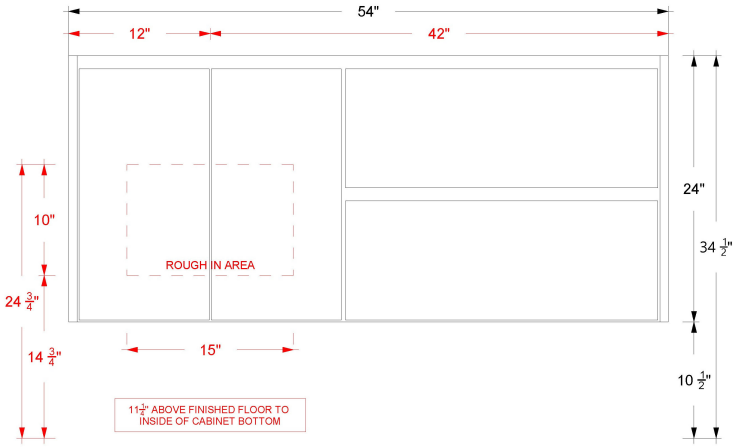

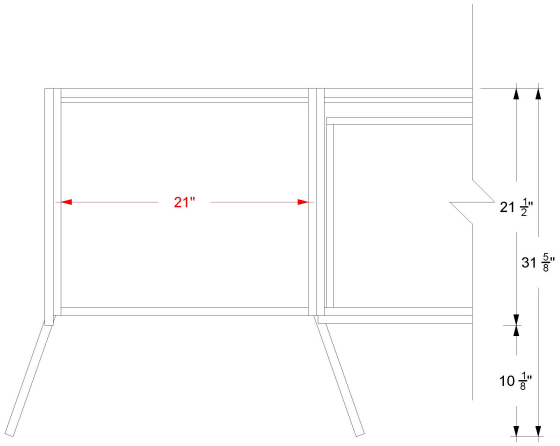

Vanderloc® reserves the right to make revisions without notice to product specifications. All product dimensions are nominal. For the most current specification sheet, visit www.vanderloc.com.

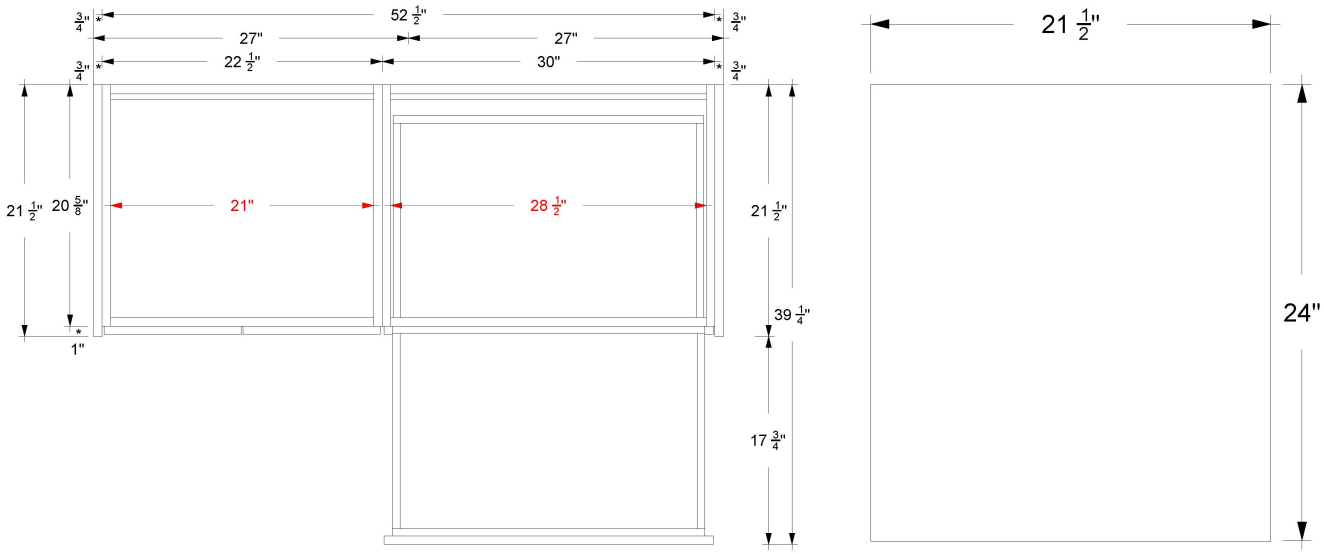

Vanderloc® reserves the right to make revisions without notice to product specifications. All product dimensions are nominal. For the most current specification sheet, visit www.vanderloc.com.