MADE IN CHINA

ASSEMBLY & INSTALLATION INSTRUCTIONS

INSTALLATION STEPS

OW1001-1BK-2PK

OPERATIONS MANUAL

Dear Customer:
Thank you for choosing us! We truly appreciate your business and your trust. If you have any questions or encounter any issues, please don't hesitate to reach out. You can contact us by email at **amzlightting@outlook.com**. Our team is committed to ensuring your complete satisfaction. We also value your feedback, as it helps other customers make informed decisions. If you' re happy with your purchase, we' d be grateful if you could take a moment to leave a brief product review on the platform where you made your purchase. Once again, thank you for choosing us. We look forward to serving you again!

Best regards,
The Support Team

Warning: If any special control devices are used with this fixture, follow the instructions carefully to assure full compliance with N.E.C. requirements.If there are any questions, contact a qualified electric contractor.

Warning: California Residents Proposition 65
This product contains lead, a chemical known to the state of California to cause cancer and birth defects or other reproductive harm. Do not place the product in your mouth. Wash your hands after handling this product.

Caution: It is highly recommended to get an electrician to install this light.Please makesure to turn the electricity off at the main circuit breaker before beginning installation. All glass is fragile.Use care when handling glass component(s) and/or lamp(s).



Please read all instructions carefully. Before you proeed to install,ralene sure that the power supply is turned off and remms off until installation is completed.



All glass is fragile.Use care when handling glass component(s)and/or lamp(s).



It is highly recommended to get an electrician to install the light.

Lighto your life with design

CAUTION
Risk of firo / Electric shock

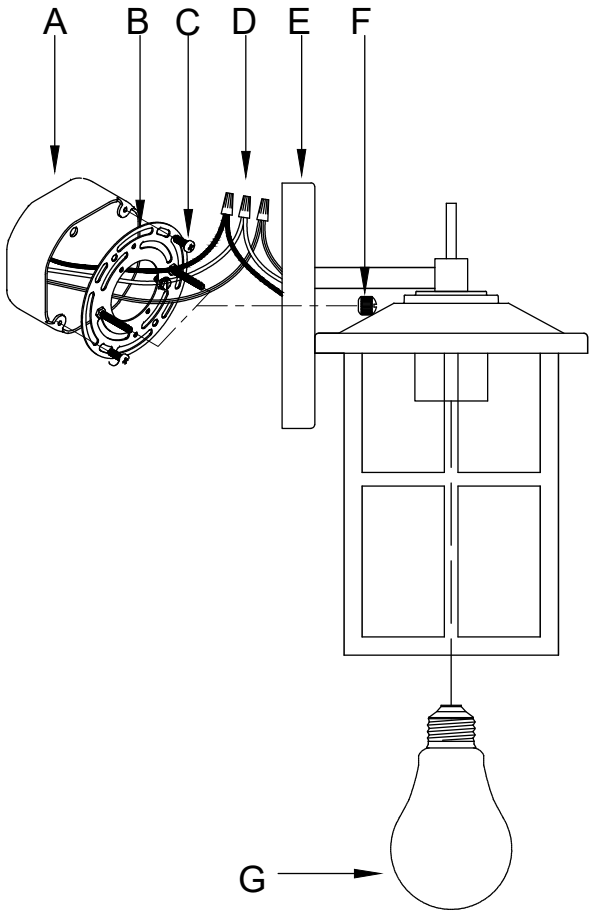

PARTS INCLUDED

Code	Part Description	QTY
A	Outlet Box	0
B	Mounting Bracket	1
C	Mounting Screws	2
D	Wire caps	3
E	Lamp Body	1
F	Nuts	2
G	Light bulb	0

***WARNING! SHUT POWER OFF AT FUSE OR CIRCUIT BREAKER.

***ATTENTION! COUPER LE COURANT AU FUSIBLE OU UN DISJONCTEUR.

ASSEMBLING THE FIXTURE (Fig.1)

1. Shut off the power at the circuit breaker box. Remove old fixture and all hardware from Junction Box. Carefully unpack your new fixture and lay out all the parts on a clear area. Take care not to lose any small parts necessary for installation.
2. Attach the mounting plate(B) to the junction box using two junction box screws(C) as shown. The side of the mounting plate marked "**GND**" must face out. **The junction box is not included.**
3. Follow wiring instructions carefully.(see fig.2)
4. Install housing (E) on the mounting plate(B) and secure it with mounting nuts (F).
5. Transfer the bulb (G) knob to the lamp body(E)

CONNECTING THE WIRES (Fig.2)

1. Connect the electrical wires as follows. Connect the Black wire from the fixture to the black house (hot) Wire. Connect the white wire from the fixture to the white (neutral) house wire. Make sure all wire nuts are secured. You may wrap the connections with electrical tape. If your outlet box has a ground wires (green or bare copper) connect fixture's ground wire to it. Otherwise attach the bare copper fixture wire to the green ground screw on the mounting plate.
2. Tuck the wire connections neatly into the wall junction box.

Your installation is now complete. Return power to the junction box and test the fixture.

FIG.1

To prevent moisture from entering the outlet box and causing a short, use clear caulking (i.e. Indoor/Outdoor Silicone Sealant) to outline the outside of fixture back plate where it meets the wall leaving a space at bottom to allow moisture a means to escape.

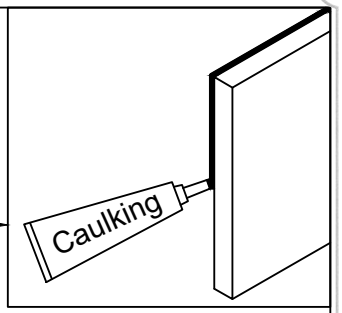

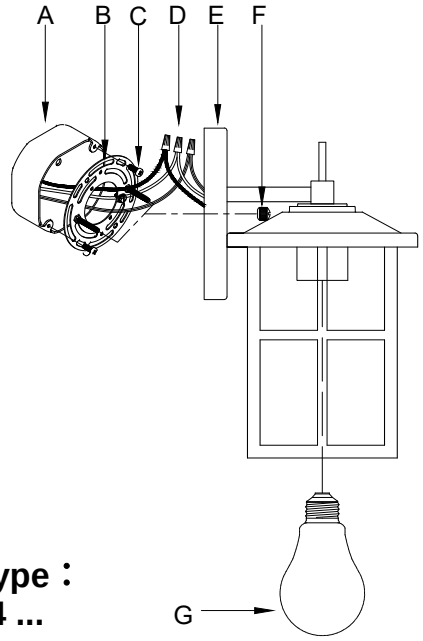

Applicable bulb type：
A60、 T45、ST64 ...

FIG.2

