ASSEMBLY INSTRUCTIONS

HALL TREE

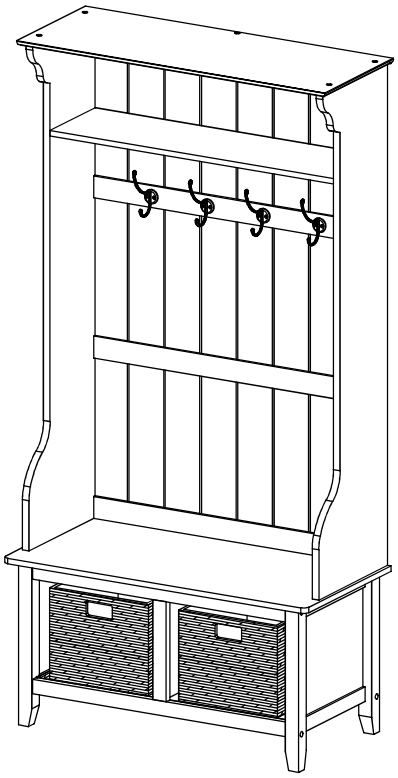

. Tools Included
. Do not throw away packing materials until assembly is complete
. Assemble this item on a soft, clean surface to protect the product
. Proper assembly requires 2 people
. Make sure all parts are included prior to assembly

PARTS LIST		
CODE	**DESCRIPTION**	**QTY.**
A	TOP PANEL	01
B	LEFT SIDE PANEL	01
C	RIGHT SIDE PANEL	01
D	TOP/ BOTTOM STRETCHER	02
E	MIDDLE STRETCHER 1	01
F	MIDDLE STRETCHER 2	01
G	BACK PANEL 1	03
H	SHELF PANEL	01
I	MIDDLE PANEL	01
J	LEFT SIDE FRAME	01
K	RIGHT SIDE FRAME	01
L	FRONT/BACK FRAME	02
M	BOTTOM PANEL	02
N	BACK PANEL 2	01
O	HYACINTH BASKET	02
P	VERTICAL FRAME	01

HARDWARE LIST			
NO.	**DESCRIPTION**	**SKETCH**	**QTY**
1	JCBC Bolt Ø1/4" x 35mm		10
2	JCBC Bolt Ø1/4" x 55mm		08
3	JOINT PIN		12
4	CAM NUT		12
5	WOODEN DOWEL Ø10 x 30mm		28
6	WOODEN DOWEL Ø8 x 25mm		08
7	HOOK		04
8	SCREW (Ø3 x 15 mm)		08
9	SCREW (Ø4 x 38 mm)		02
10	SCREW (Ø3 x 12 mm)		16
11	SCREW (Ø4x 25mm)		06
12	ALLEN KEY 4mm		01

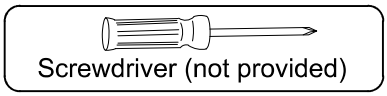

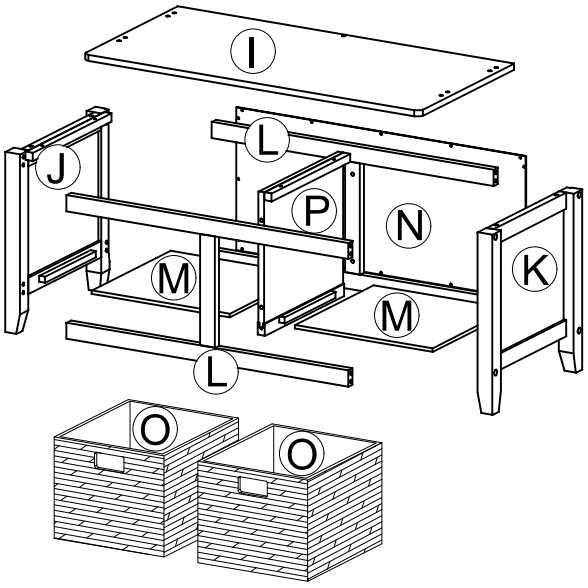

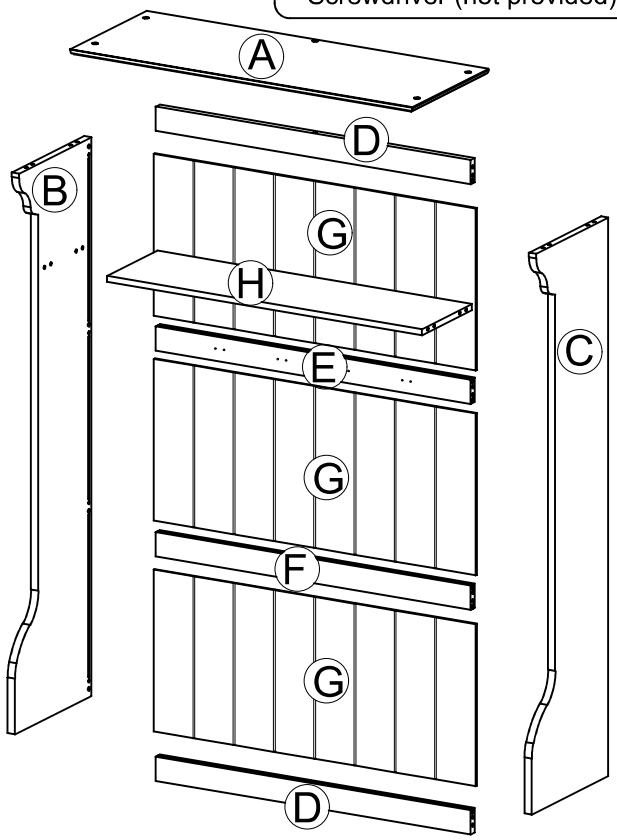

STEP 1:

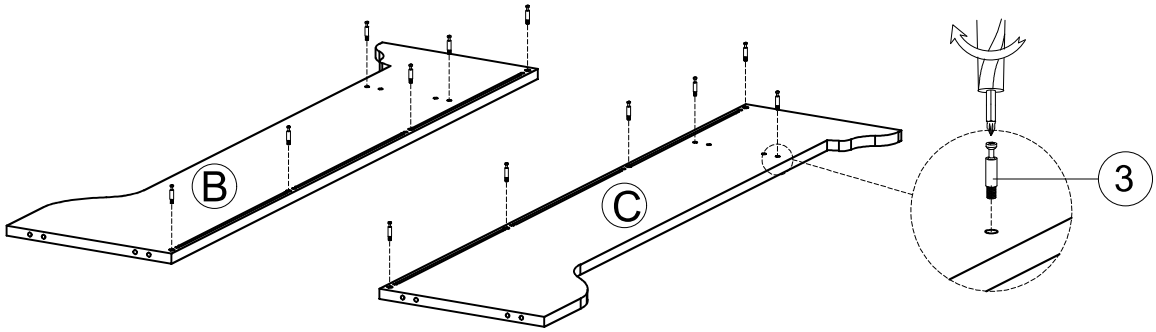

3	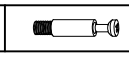	x12

STEP 2:

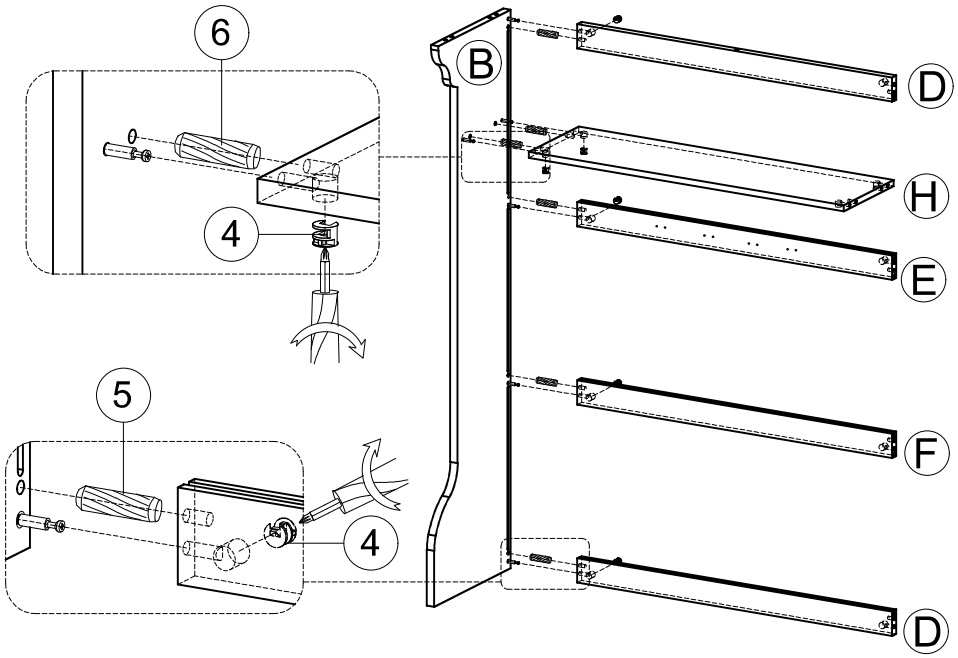

4		x 6
5		x 4
6		x 2

STEP 3:

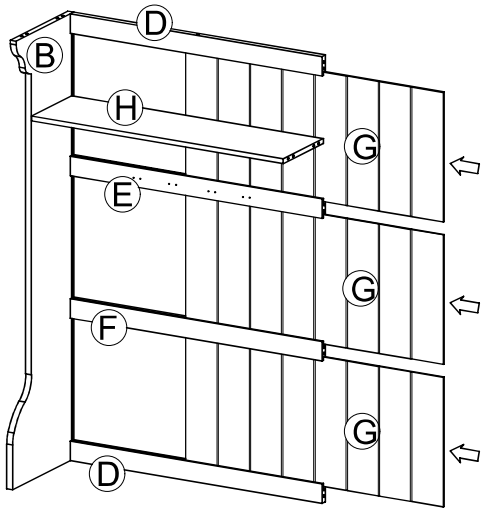

STEP 4:

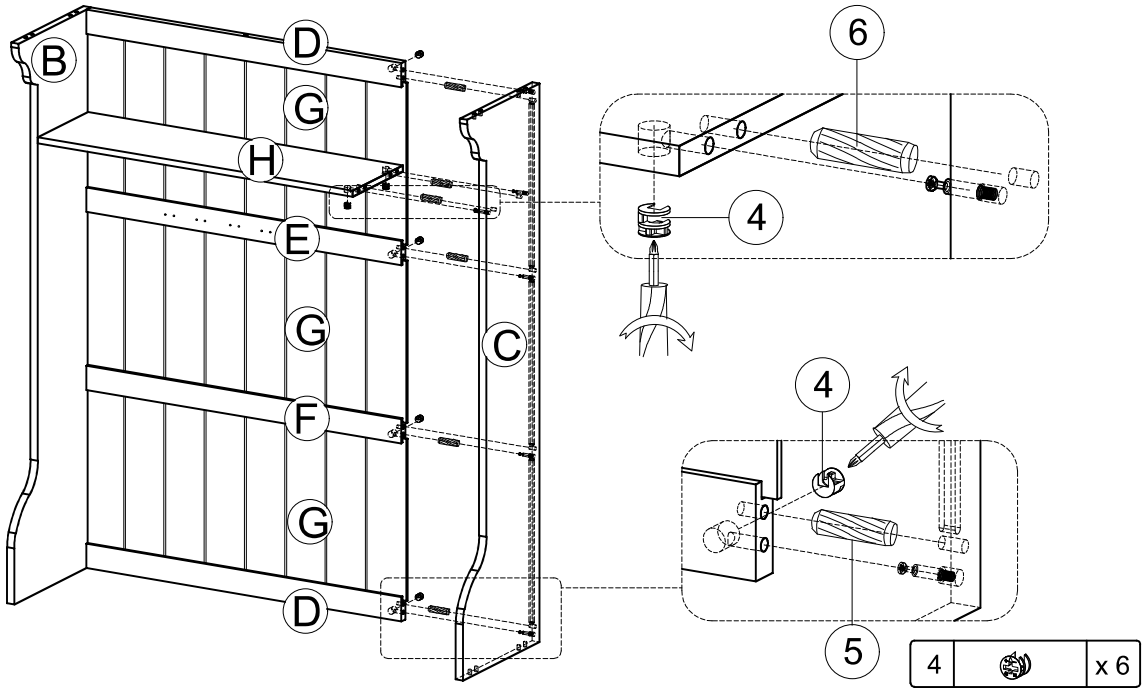

4		x 6
5		x 4
6		x 2

STEP 5:

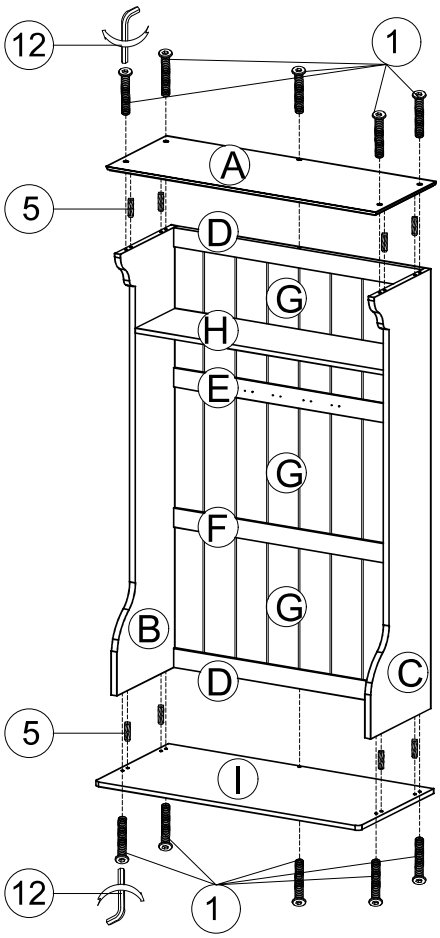

1		x10
5		x 8

STEP 6:

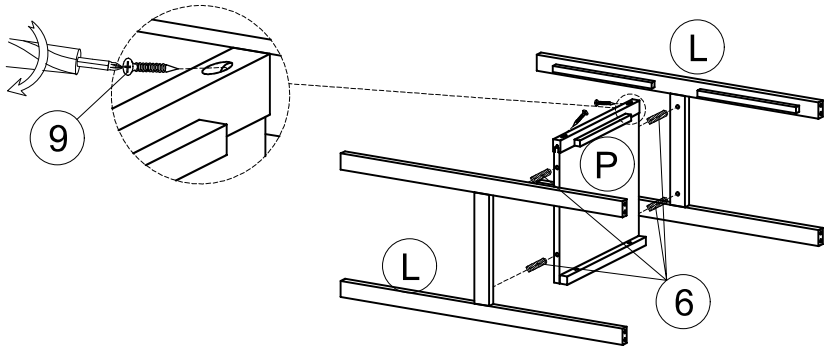

9		x 2
6		x 4

STEP 7:

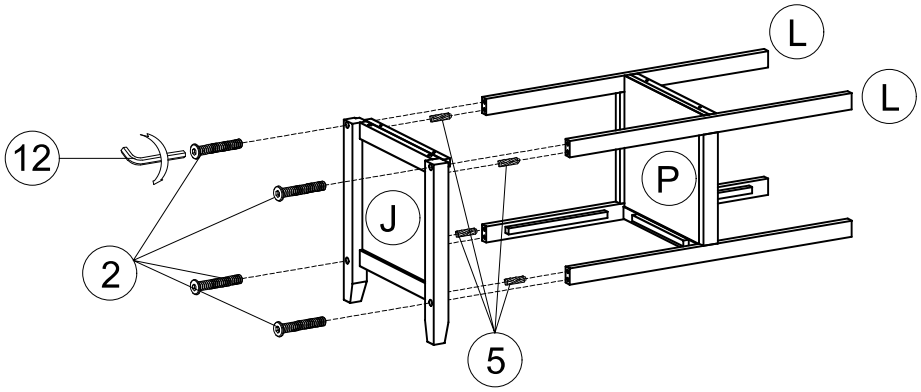

2		x 4
5		x 4

STEP 8:

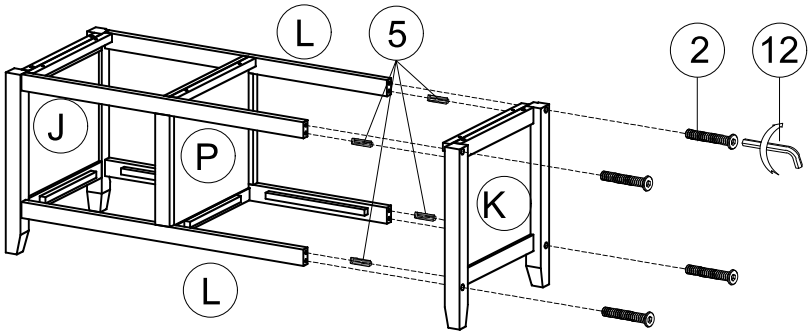

2		x 4
5		x 4

STEP 9:

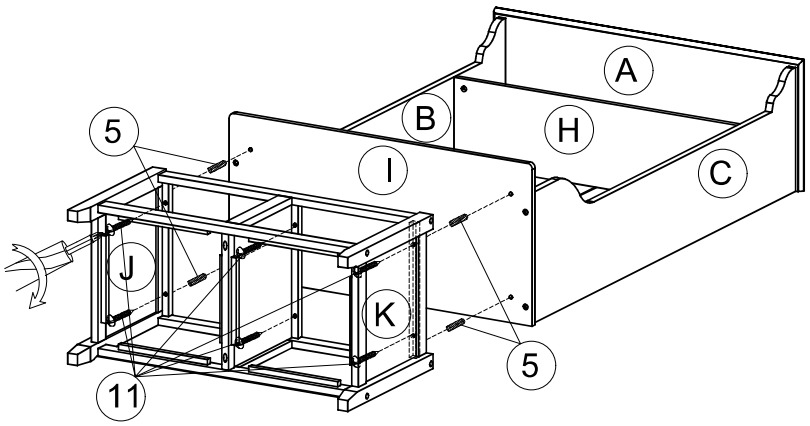

11		x 6
5		x 4

STEP 10:

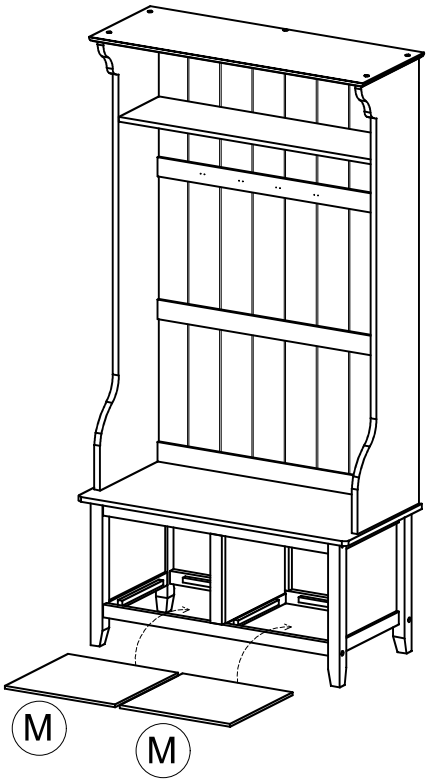

STEP 11:

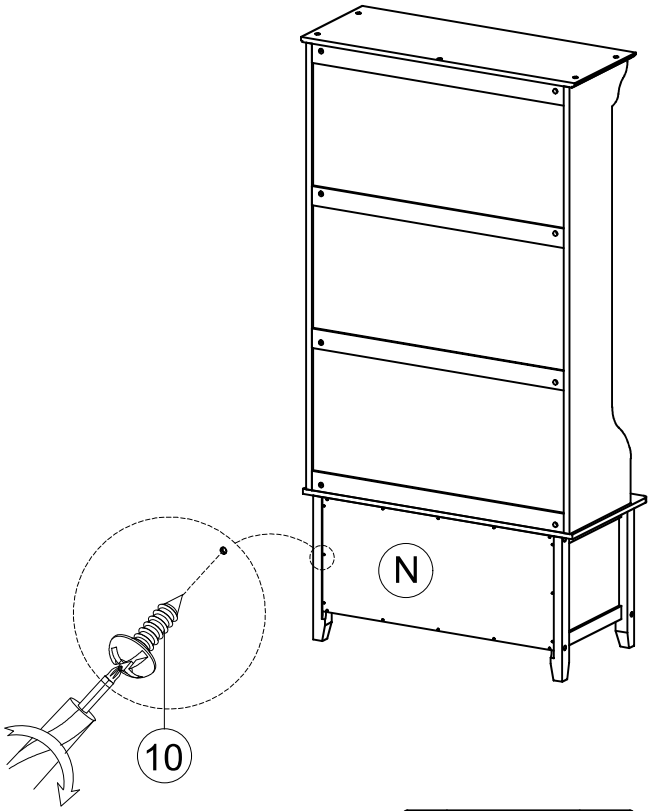

10		x 16

STEP 12:

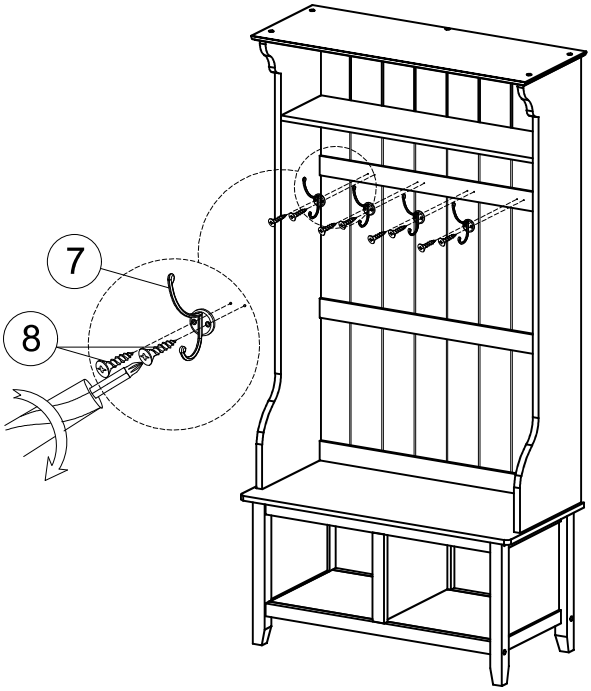

7		x 4
8		x 8

STEP 13:

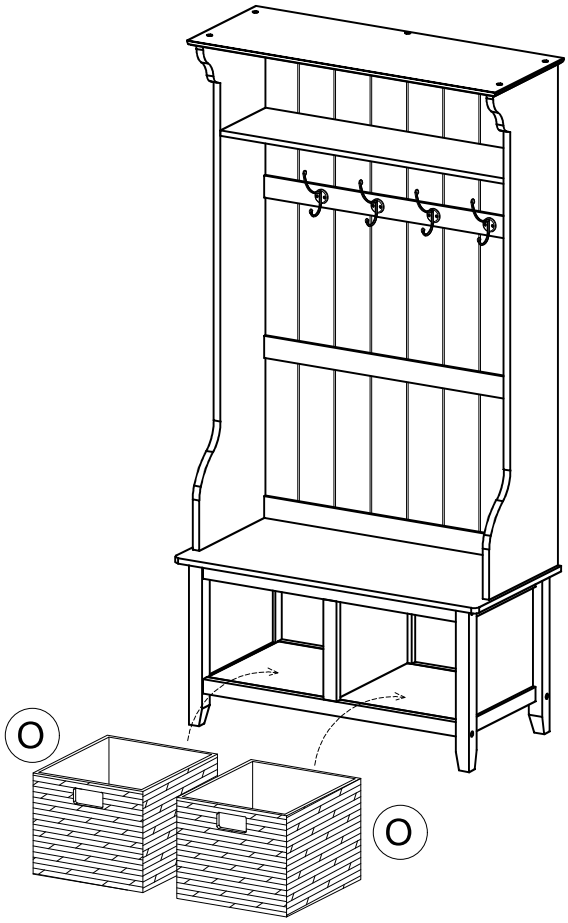

COMPLETED ASSEMBLY

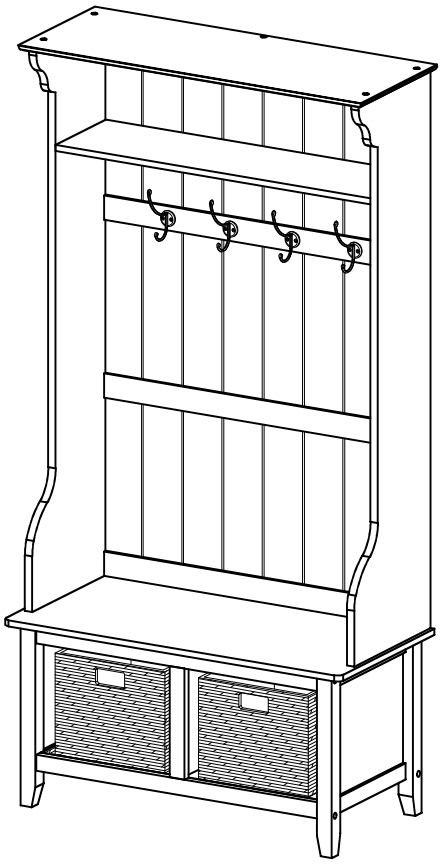

Wall Stud

SAFETY BRACKET INSTRUCTIONS

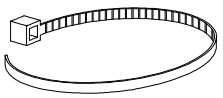	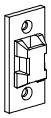	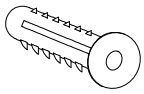	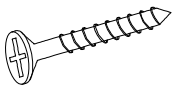	
Strap A (1pc)	Mounting Bracket B (2pcs)	Wall Anchor C (2pcs)	Short Screw D (2pcs)	Long Screw E (2pcs)

STEP 1:

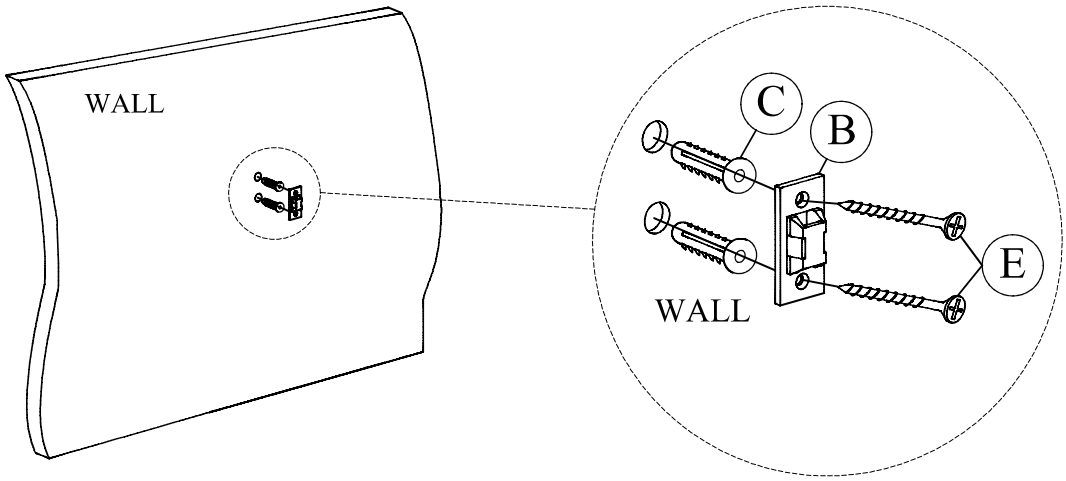

STEP 2:

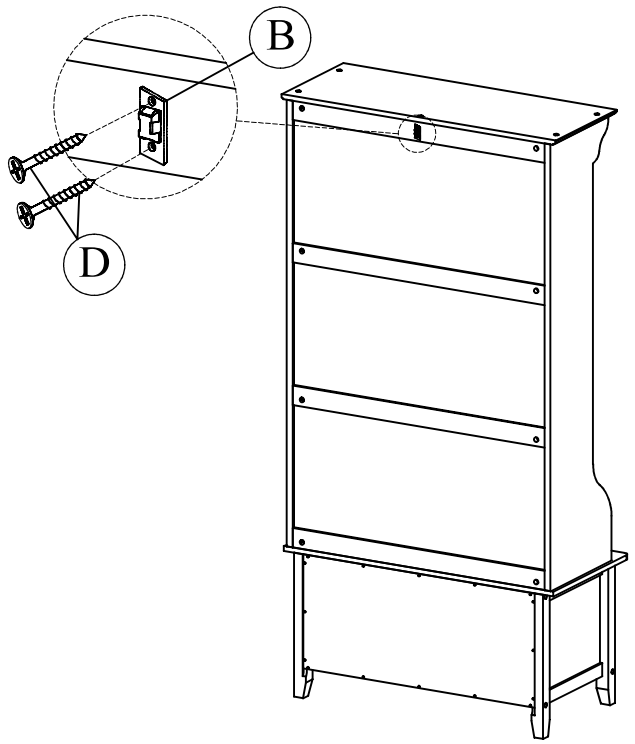

STEP 3:

