BATHLYN
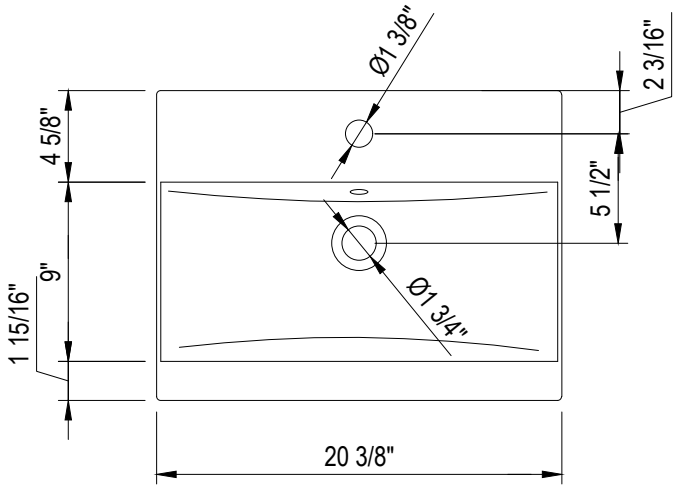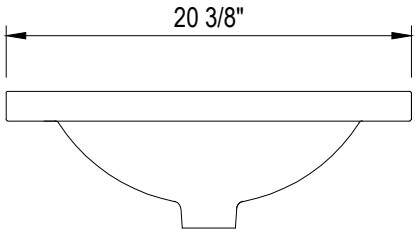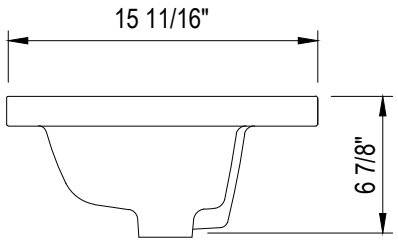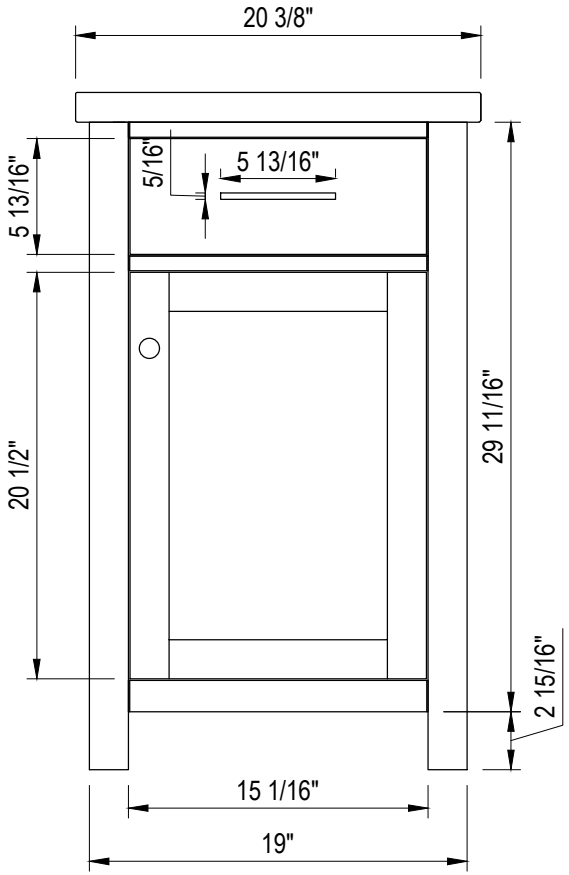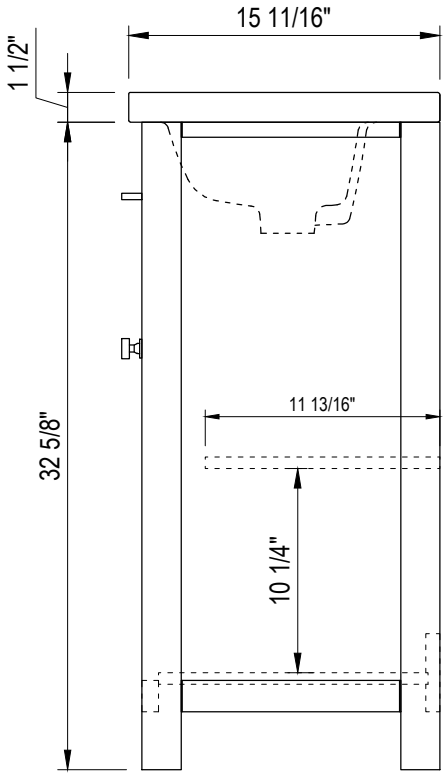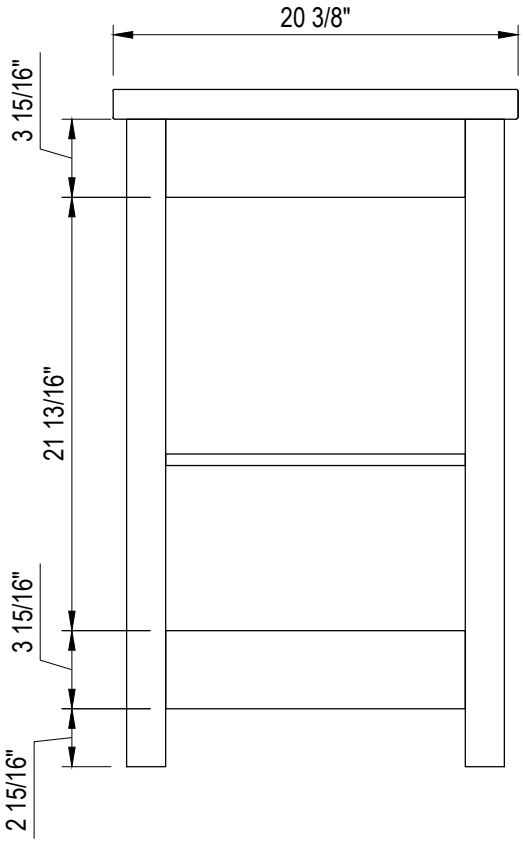
JACKLYN-20