Assembly Instructions

Caution : You must read this before you proceed

Care & Maintenance



- Not for commercial use. For residential use only.



- Furniture may scratch floors. We recommend using furniture pads to protect your floors.



- Do not put hot items directly on furniture surface.



- Do not clean furniture with harsh cleansers or polish.



- Do not place furniture under direct sunlight.



- Do not place furniture near heating or cooling vents.



- Do not write on furniture without a padded barrier to protect the surface.



- Do not place furniture outside . For indoor use only.



- Stains may be removed with mild soap solution and damp cloth.



- Children should not climb or jump on the furniture.



- Dust and pick-up spills using a clean, non-colored, lint-free cloth.

Please look in carton for hardware packs and legs.
Sets often ship in multiple boxes and may arrive a day or two apart.

Upholstered Bed King Size

N761P499532W / N761P499532N

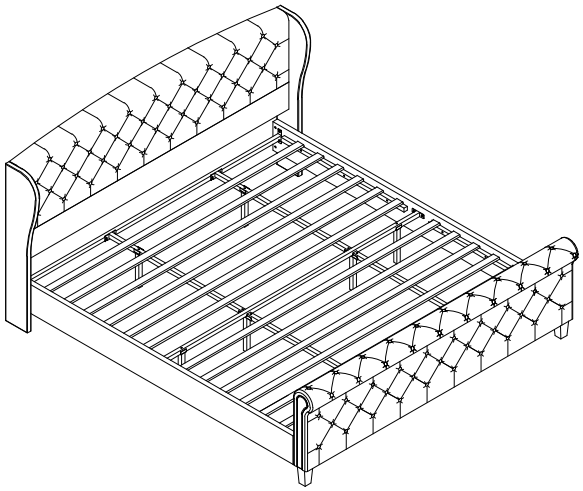

Parts List N761P499532W / N761P499532N

Label	Picture	Description	QTY
A	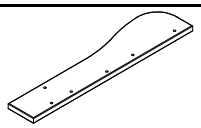	Left Wing Panel	1
B	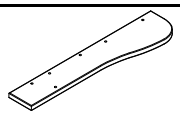	Right Wing Panel	1
C	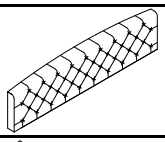	Headboard	1
D	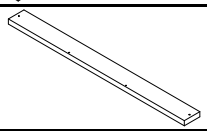	Under Headboard	1
E	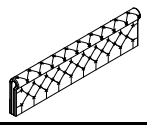	Footboard	1
F	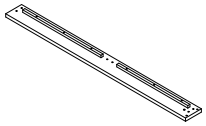	Left Side Rail	1
G	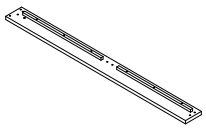	Right Side Rail	1

Parts List N761P499532W / N761P499532N

Label	Picture	Description	QTY
H	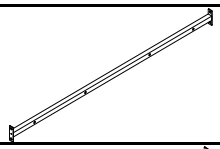	Middle Connecting Rod	1
I	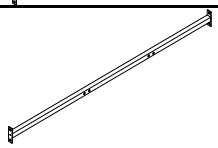	Bedside Connecting Rod	1
J	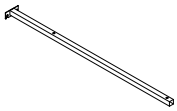	Center Rail	4
K	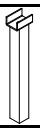	Side Leg	2
L	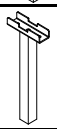	Center Leg	2
M	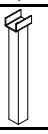	Support Leg	4
N	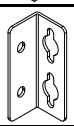	V-Bracket	2
O	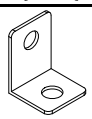	L- connecting iron pieces	2
P	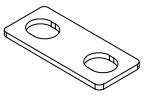	connecting iron pieces	2
Q	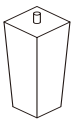	Bed Legs	2
R	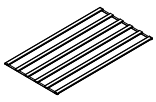	Slats	2

Parts List N761P499532W / N761P499532N

Label	Picture	Description	QTY
①	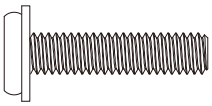	Bolt Ø5/16"×45mm	2+1
②	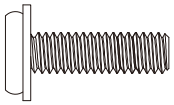	Bolt Ø5/16"×35mm	20+2
③	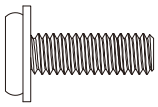	Bolt Ø5/16"×25mm	8+1
④	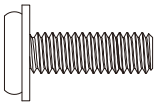	Bolt Ø5/16"×19mm	24+2
⑤		L-Allen Key 4mm	1

Assembly Preparation

Before Beginning Assembly :

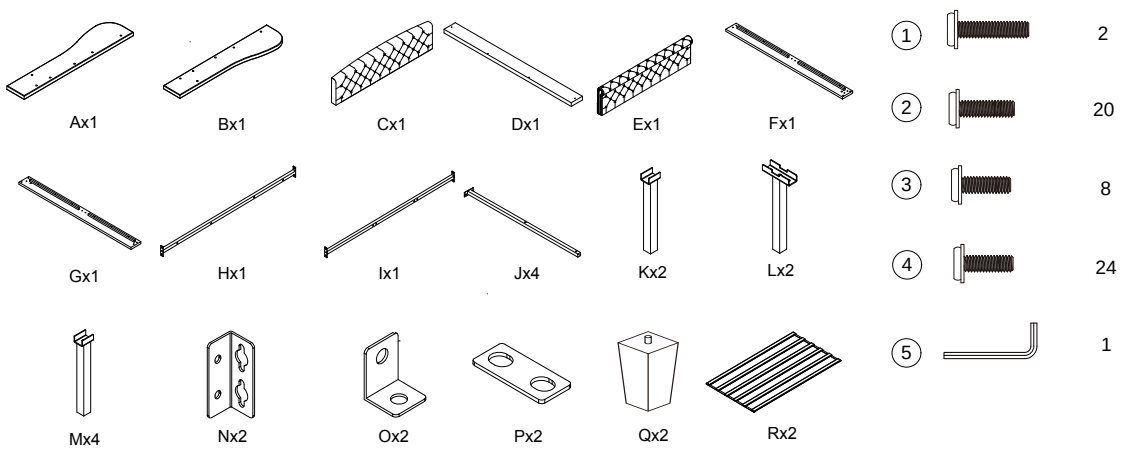

- Read instructions, cover to cover-
- Have 2 adults on hand for assembly-
- Do not assemble on flooring or carpet-
- Assemble on a clean non-marring surface (packing foam)-
- Save all packaging until finished-

Assembly Steps

Overview

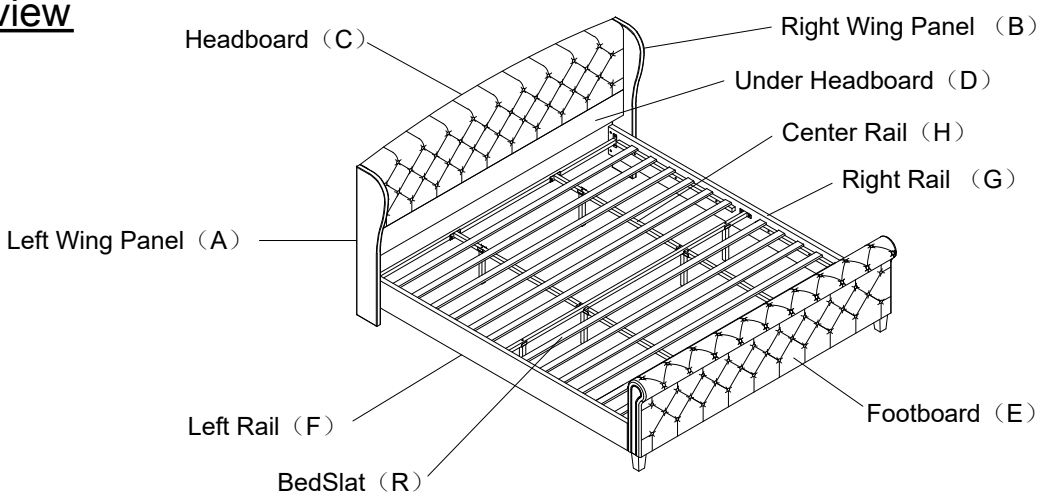

This Upholstered Bed has multiple parts and may require up to some 30 minutes to assemble. To give you an overview of the Upholstered Bed parts, the above picture is to help you put the various parts into perspective. Please read through the instructions below to familiarise yourself with the parts and steps before assembly.

Step 1

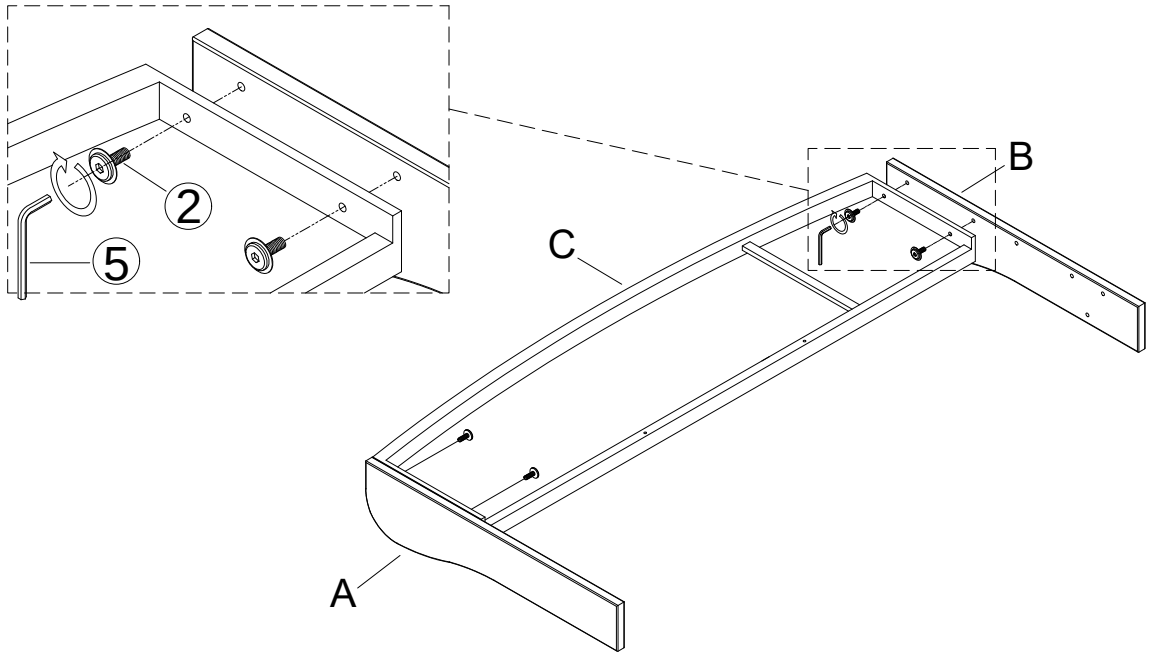

Attach Left Leg Headboard (A) and Right Leg Headboard (B) to Headboard (C) by using Bolts (②) with L-Allen key (⑤).

Step 2

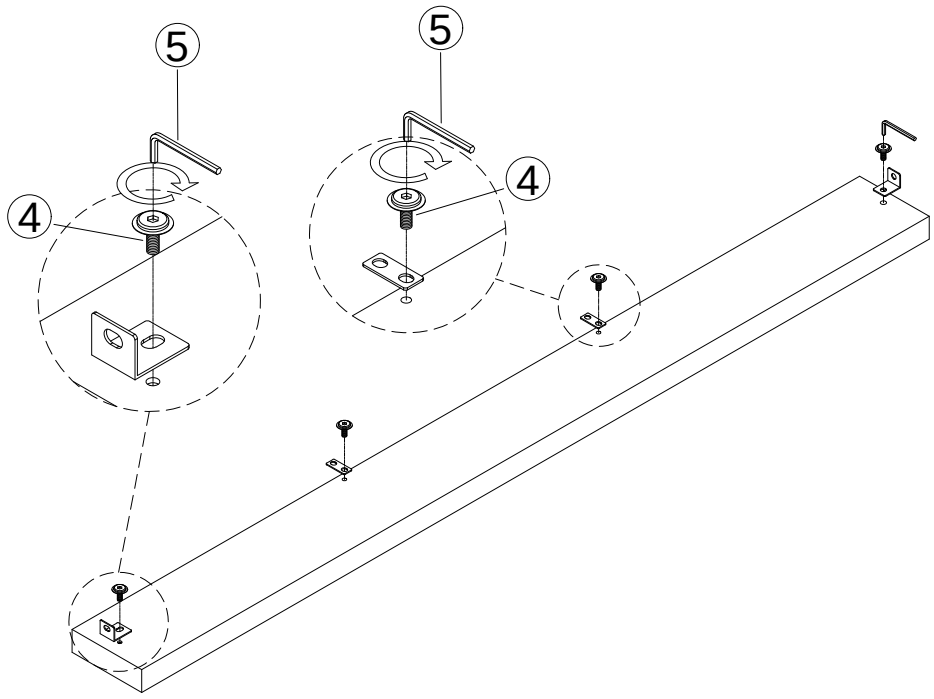

Attach L- connecting iron pieces (O) and connecting iron pieces (P) to Under Headboard (D) by using Bolts (④) with L-Allen key (⑤) .

Step 3

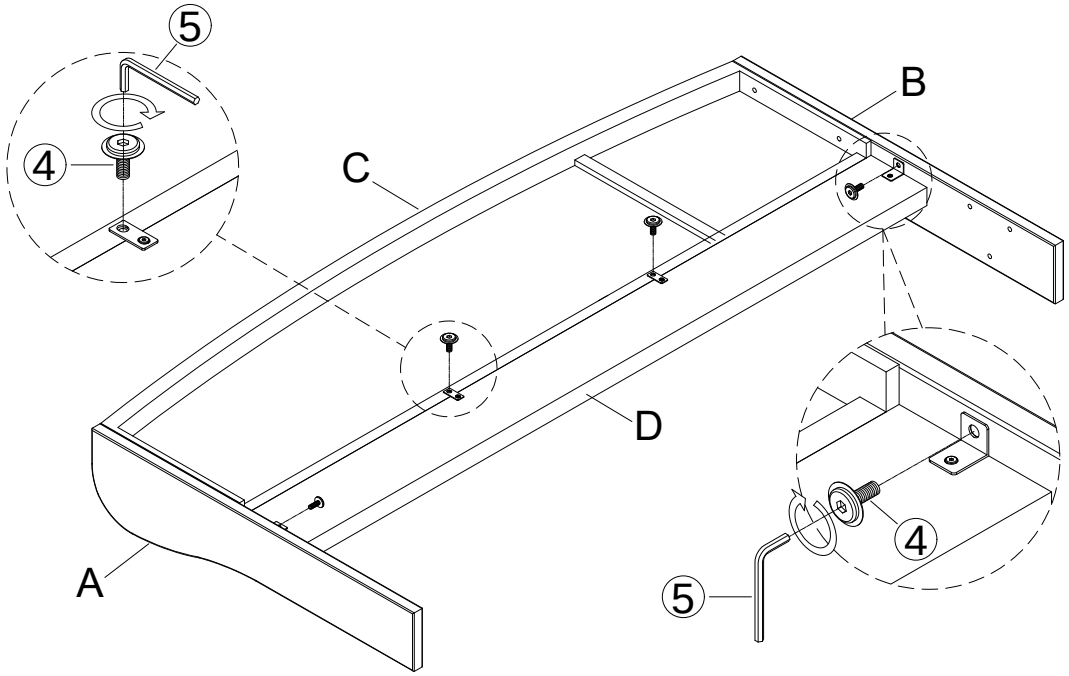

Attach Under Headboard (D) to Headboard and Leg Headboard, by using Bolts (④) with L-Allen Key (⑤).

Step 4

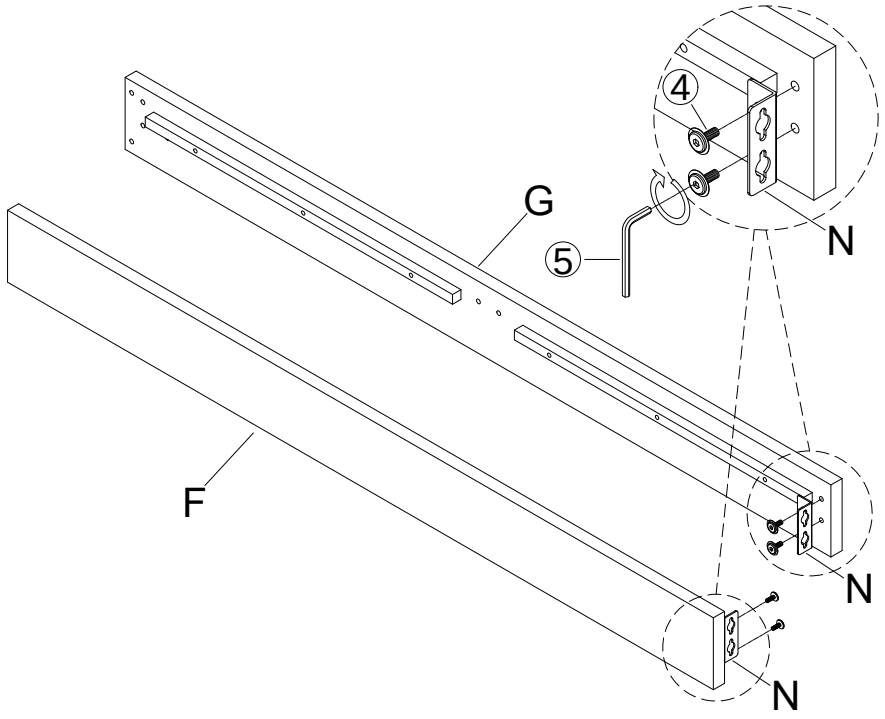

Attach V-Bracket (N) to 2 x Side Rail (F)&(G), by using Bolts (④) with L-Allen Key (⑤) .

Step 5

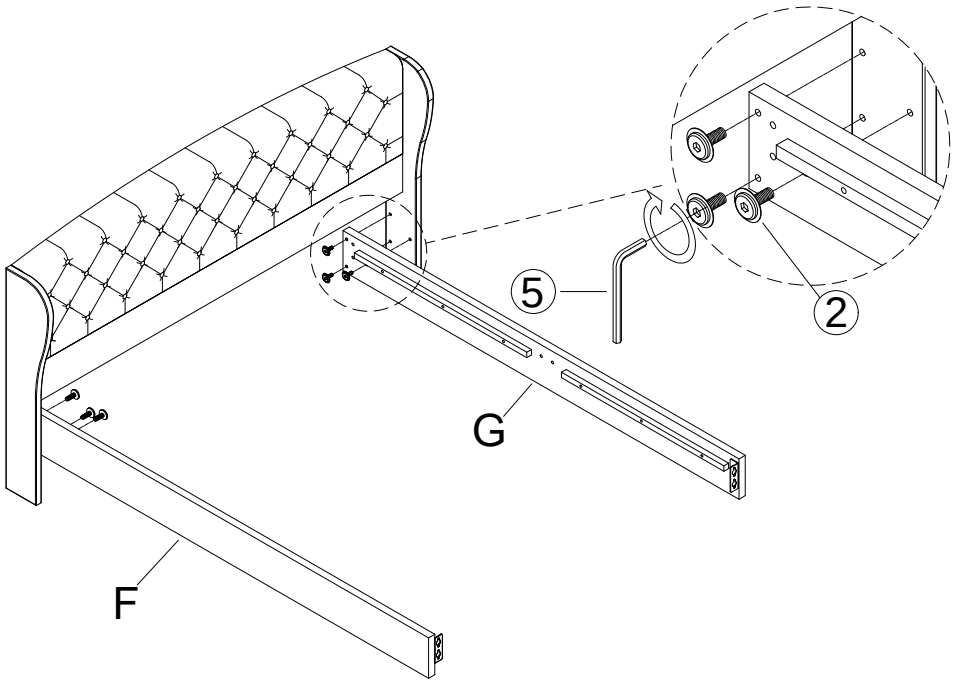

Attach Left Side Rail (F) to Left Wing Panel (A) and Right Side Rail (G) to Right Wing Panel (B),by using Bolts (②) with L-Allen key (⑤).

Step 6

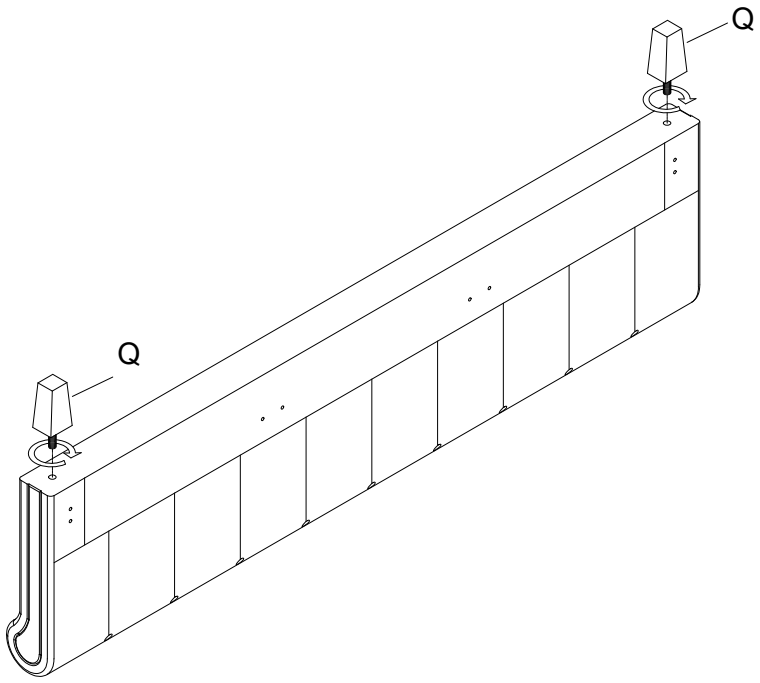

Attach 2 x Bed legs (Q) to Footboard (E).

Step 7

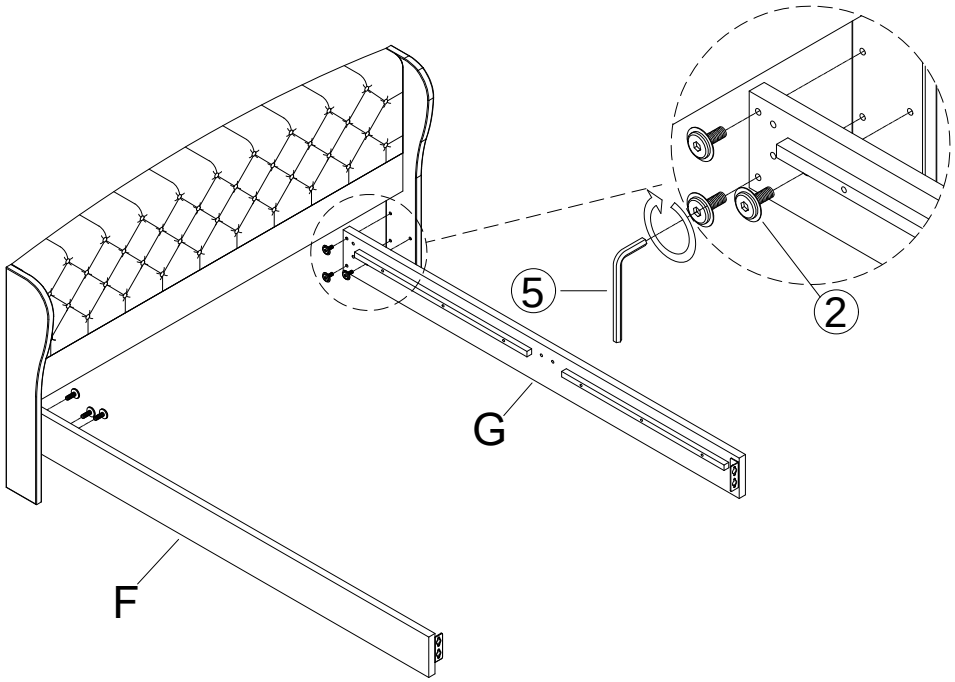

Attach 2 x Side Rail (F)&(G) to Headboard, by using Bolts (③) with L-Allen Key (⑤).

Step 8

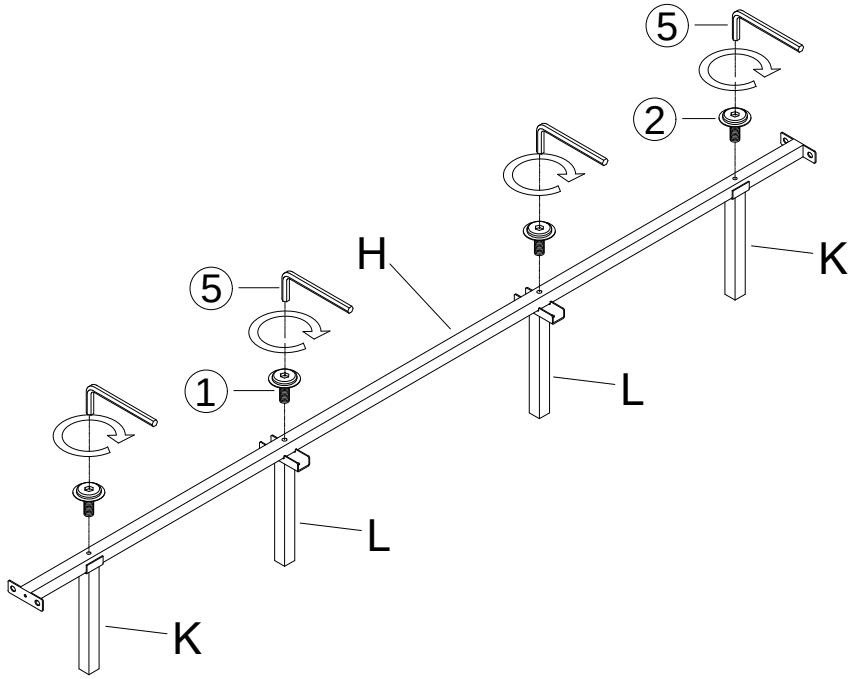

Attach Middle Connecting Rod (H) to Support Legs (K) by using Bolts (②) with L-Allen Key (⑤) and Center Legs (L), by using Bolts (①) with L-Allen Key(⑤).

Step 9

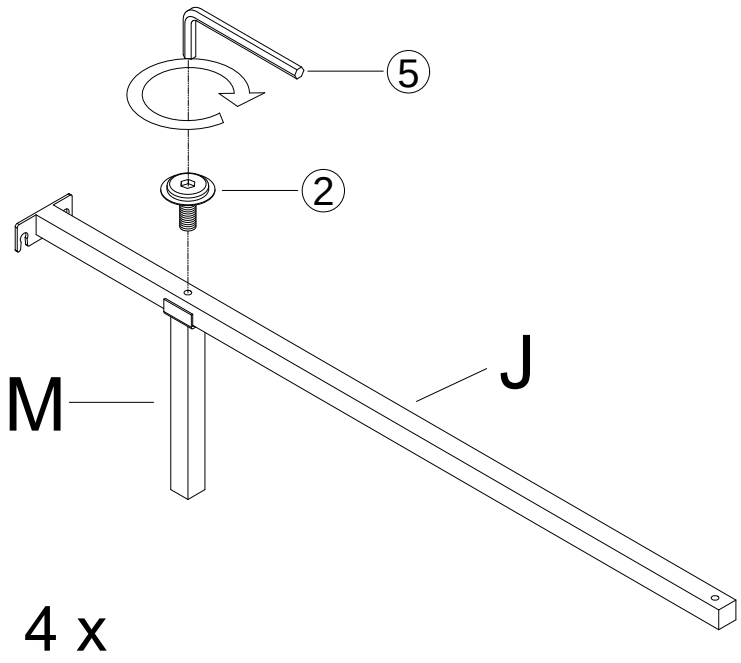

Attach Center rail (J) to Support Leg (M), by using Bolts (②) with L-Allen Key (⑤).

Step 10

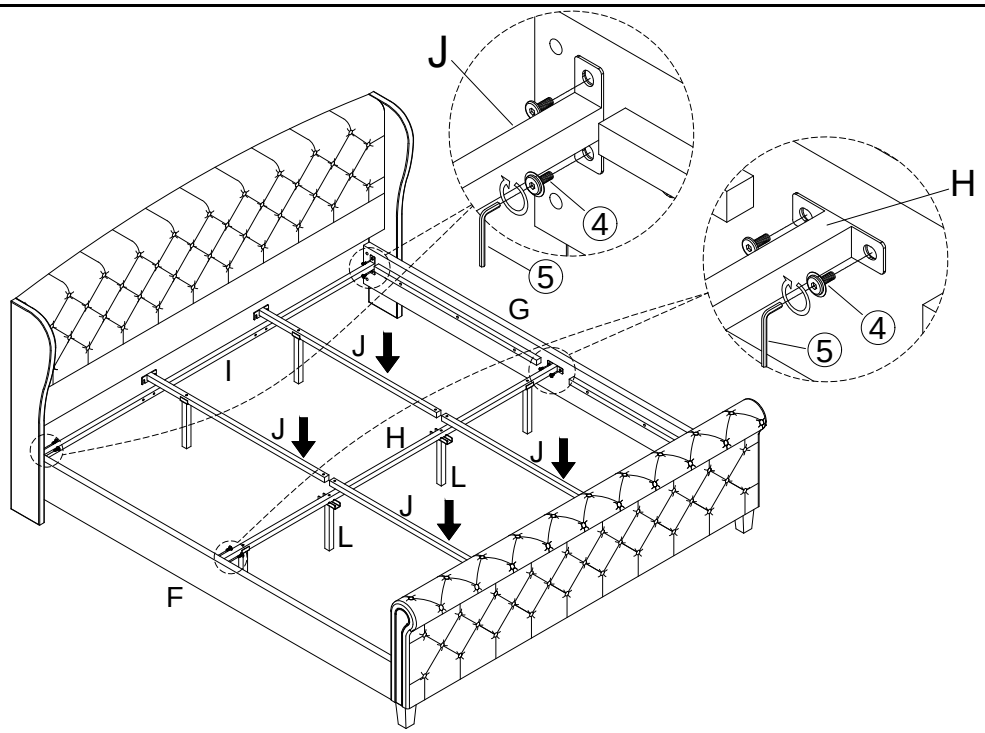

Attach Bedside Connecting Rod (I) and Middle Connecting Rod (H) to Side rails (F) & (G) ,by using Bolts (④) with L-Allen Key (⑤).

Attach Center rail (J) to Center Legs (L) both ends.

Step 11

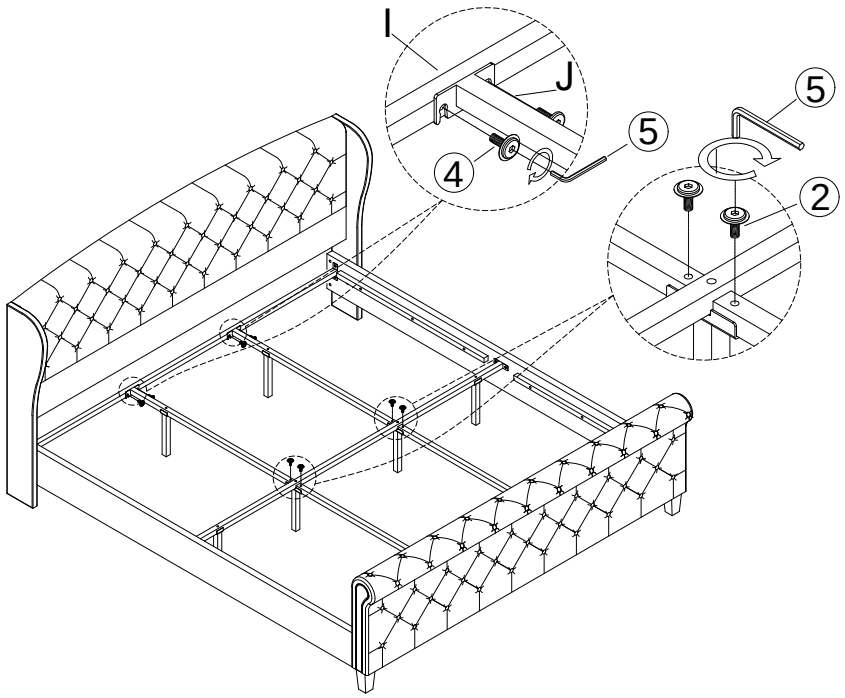

Attach Center rail (J) to Center Crosbar(I) by usingBolts (④)with L-AllenKey (⑤) and Support Legs(L) both ends, by using Bolts (②) with L-Allen Key (⑤).

Step 12

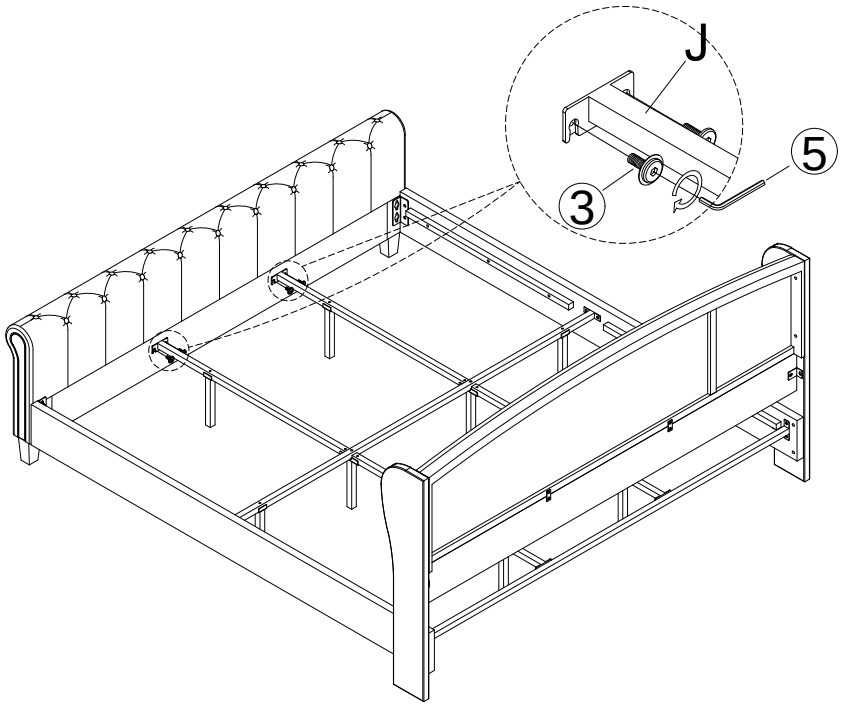

Attach Center rail (J) to Footboard (E) by using Bolts (③)with L-AllenKey (⑤).

Step 13

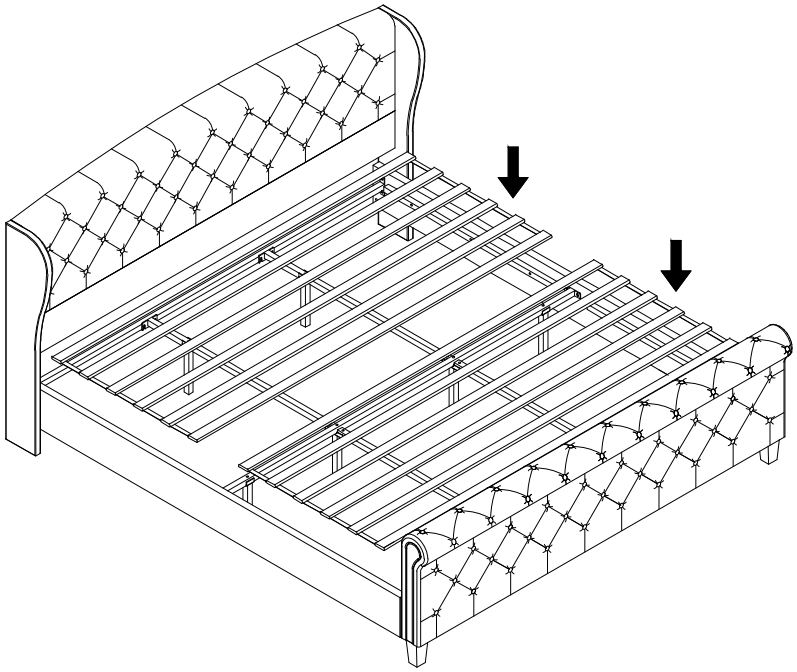

Attach X2 Slats (R) to Side rails.

Step 14

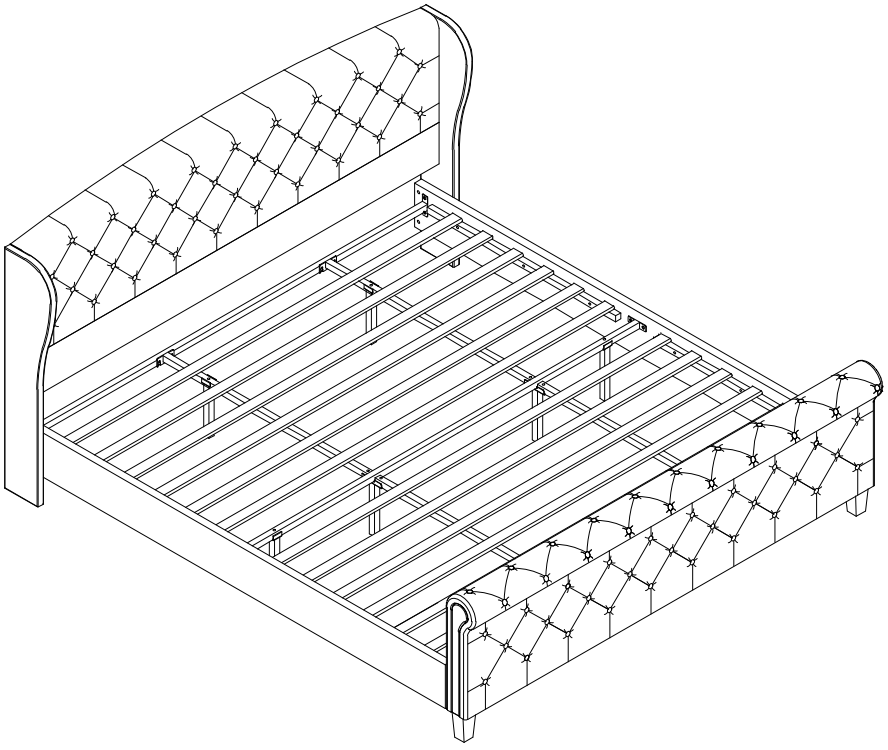

Your Upholstered Bed is ready for use.
This Upholstered Bed can only be used on a flat, level surface.

Place the Bed on a LEVEL SURFACE.
Inspect it and make sure all parts are adequately connected.
Don't push too hard,shake on the bed.
This would help to align all the parts at all the joint areas.
CAUTION 1:When tightening the screws,tighten sequentially.
DO NOT tighten any screw fully and then towards the next one.
ThIs would cause the frame to warp.
If there is stIll wobbles,loosen the screws and execute this same process.DO NOT
tighten any screw fully and then towards the next one.
WARNING!! IF BED IS NOT STABLE,IT COULD LEAD TO DAMAGING THE PRODUCT.
Ensure all screws are fully locked into position.